SMARTSCAN | NG²

SmartScanNG²

Operator's Guide for BHP Railway

EUD-2022084-00 Rev.2
23 August 2023

© 2023 Southern Technologies Corporation (STC). All rights reserved.
Printed in the USA.

Because products evolve and system configurations change, this manual may not be an exact representation of the products and systems that you are using.

STC assumes no responsibility for errors or omissions in this document. Nor does STC make any commitment to update the information contained herein.

Product and company names mentioned herein are trademarks or registered trademarks of their respective owners.

WARNING!

Contact with electrically active parts could result in sparks, burns, and electric shock. Because of this, you should avoid all electrical hazards when installing, wiring, operating, and maintaining the SmartScanNG² system. Failure to do so could result in damage to the equipment or serious injury to you.

NOTICE:
If equipped with an AEI subsystem, the user is required to obtain a Part 90 site license from the FCC to operate in the United States. See product label for FCC ID number. Access the FCC Web site at www.fcc.gov/Forms/Form601/601.html for additional information concerning licensing requirements.

Users in all countries should check with the appropriate local authorities for licensing requirements.

Southern Technologies Corporation
6145 Preservation Drive
Chattanooga, TN 37416
www.southern-tech.com

email: stcemail@southern-tech.com

fax number: 423-499-0045
telephone number: 423-892-3029

Contents

This section lists the headings of this guide in sequential order with their page references.

1.0 Introduction 7
1.1 Purpose of This Guide 7
1.2 SmartScanNG² 7
1.3 General Specifications - SmartScanNG² 9
1.4 Cautions 10
1.5 Disclaimers 10
1.6 How to Comment on This Guide 10
1.7 How to Order More Copies of This Guide 10
1.8 Standard Warranty 11
2.0 Defect Detection 13
2.1 System Activation 13
2.2 System Deactivation 14
2.3 Speed Calculation 14
2.4 Train Direction 14
2.5 Transducer Pulse Processing 15
2.6 Axle Scanning 16
2.7 Hot Bearing Alarms 16
2.7.1 Bearing Scan Process 17
2.7.2 Referencing System 19
2.7.3 Pyrometer Linearity 19
2.8 Hotwheel Alarms 20
2.9 Auxiliary Alarms 21
3.0 Display Panel 23
3.1 LED Indicators 23
3.2 Keypad & Display 24
3.3 System Health Menu 25
3.4 System Functions 26
3.4.1 Radio Test 26
3.4.2 Auto-Calibration 27
3.4.3 Network Menu 27
3.4.4 Radio Menu 27
3.4.5 Volume Menu 28
4.0 Serial Interface 29
4.1 Main Menu 30
4.2 Setup Menu 32
4.2.1 Date and Time 34
4.2.2 Milepost/Kilometer Post (MP/KP) 35
4.2.3 Track Designation 36
4.2.4 Track Direction 37

4.2.5 Alarm Settings 37
4.2.6 Equipment Settings 44
J.2.7 Messages 57
4.2.8 AEI Reader Parameters 66
4.2.9 Units of Measure 68
4.2.10 Load Default Setup Parameters 69
4.2.11 COM1, COM2, COM3, COM4, & COM6 71
4.2.12 Network Settings 72
4.2.13 Velocity Settings 74
4.2.14 TIE Port Setting 75
4.2.15 Polling ID Settings 75
4.3 System Functions Menu 76
4.4 Replay EOT Announcement 93
4.5 System Security 94
5.0 Web/Secure Wireless User Interface 97
5.1 Train Data 99
5.2 System Status 100
5.3 Configuration 103
5.4 System Event Log 117
5.5 Maintenance Info 118
5.6 System Functions 119
5.7 Remote Software Update 121
5.8 Calibration 122
6.0 Producing Reports 123
6.1 Train Summary Report 125
6.2 Train Detail Report 129
6.3 Train Detail Report (Abbreviated) 137
6.4 Exception Summary Report 140
6.5 Exception Detail Report 143
6.6 Abbreviated Exception Detail Report 152
6.7 Last Train Report 155
6.8 System Status Report 156
6.9 AEI Diagnostic Detail Report 160
6.10 Event Log Report 169
7.0 Radio Announcements 171
7.1 Arrival Messages 171
7.2 Real-Time Messages 171
7.3 Post-Train Messages 172
7.3.1 No Alarms 172
7.3.2 Only an Integrity Failure Detected 173
7.3.3 Exception Alarms Detected 173
8.0 Scheduled Maintenance 177
9.0 Customer Service 195
9.1 Reaching STC 195
9.2 Returning Equipment for Repair 195
9.3 Reporting Problems or Suggestions 196
9.4 Ordering Spare Parts 196

9.5 Checking on Shipments and Orders 196
Appendix A System Alarms 197
A.1 Cold Rail Alarm 197
A.2 Cold Resistor Alarm 198
A.3 Cold Wheel Scanner Alarm 199
A.4 Cold Wheel Scanner Resistor Alarm 200
A.5 Highrange Transducer Miscounts Alarm 200
A.6 Integrity Failure Alarm 201
A.7 Low Battery Alarm 201
A.8 Midrange Transducer Miscounts Alarm 201
A.9 No Approach Track Alarm 201
A.10 Pyrometer Noise Filtered Rail Alarm 201
A.11 Pyrometer Noise Filtered Wheel Alarm 202
A.12 Reverse Direction Detected 202
A.13 Short Train Alarm 202
A.14 Stuck Dragger Recovered Alarm 202
A.15 Test Train Alarm 203
A.16 Very Slow Train Alarm 203
Appendix B Integrity Failures 205
B.1 Dead Battery Alarm 205
B.2 Dead Resistor Alarm 205
B.3 Dead Wheel Scanner Resistor Alarm 206
B.4 Highrange Transducer Miscounts Alarm 206
B.5 Stuck Dragger During Train Passage Alarm 207
B.6 Stuck Dragger Pretrain Alarm 207
B.7 Stuck High-Load Detector Pretrain Alarm 207
B.8 Stuck Wide-Load Detector Pretrain Alarm 207
B.9 Successive Cold Rails Exceeded Alarm 208
B.10 Successive Cold Resistors Exceeded Alarm 208
B.11 Successive Cold Wheels Exceeded Alarm 209
B.12 Successive Cold Wheel Resistors Exceeded Alarm 210
B.13 Train Present on Restart Alarm 210
Appendix C Replacement of Type2 Scanners 211
C.1 Bearing Scanners 211
C.2 Wheel Scanners 213
Appendix D Replacement of Type III Scanners 215
D.1 Bearing Scanners 215
D.2 Wheel Scanners 217
Appendix E Calibration of Type2 Scanners 219
E.1 Bearing Scanners 219
E.2 Wheel Scanners 222
Appendix F Calibration of Type III Scanners 225
F.1 Bearing Scanners 225
F.2 Wheel Scanners 230
Appendix G Lens Cleaning of Type III Scanners 235
Appendix H Predictive Gate Scanning 237

H.1 Overview 237
H.2 Scanning Process 238
H.3 Reporting the Pyrometer Saturation Alarm 239
Appendix I 2500-402 Spacer Kit Installation 241
Appendix J Scanner Resistor Baseline Acquisition 243
J.1 Bungalow Speaker Announcements 243
J.2 Processing Resistor Baseline Results 244
Appendix K Communications Ports 247
Index 249

1.0 Introduction

This section summarizes the purpose of this guide, describes the SmartScanNG² system, tells how to comment on this guide, and tells how to order more copies of this guide. It also covers the cautions and disclaimers of which the customer should be aware.

1.1 Purpose of This Guide

The technical staff at Southern Technologies Corporation (STC) created the SmartScanNG² system. This guide describes that system.

The SmartScanNG² system monitors moving trains and reports certain conditions detected on these trains. Parts of the system, like the bearing scanners, are installed on the tracks. Other parts of the system, like the controller module, are installed near the tracks. Most nontrackside components are factory-installed inside a wayside enclosure (aka bungalow). Therefore, the installation of these already installed components is not covered in this guide.

The SmartScanNG² system is modular and firmware-driven. Hardware and firmware can be changed to meet the unique needs of a given railroad. Thus, some of the components that make up a SmartScanNG² system differ from railroad to railroad.

This guide is for those who purchase, install, maintain, troubleshoot, manage, or use the SmartScanNG² system.

1.2 SmartScanNG²

The SmartScanNG² system is a full-featured detection and reporting system. It monitors moving trains, providing real-time detection of:

- Overheated bearings
- Overheated wheels, when wheel scanners are installed and enabled
- Dragging equipment, when dragging-equipment detectors are installed and enabled
- Shifted loads, when wide-load detectors are installed and enabled
- Oversized loads, when high-load detectors are installed and enabled
- Automatic Equipment Identification (AEI) tags, when AEI hardware and firmware are installed and enabled
- Direction of the train
- Exit speed of the train

The SmartScanNG² system runs well in the harsh environments found along right of ways. It runs under the most adverse weather conditions, functioning over a temperature range of -40°F to +160°F (-40°C to +71°C). It runs in high vibration situations. It runs unattended, carrying out all tasks without human intervention.

The SmartScanNG² system monitors trains traveling from 7 to 90 mph (11.3 to 145 kph). It monitors trains heading in either direction on the track.

When the SmartScanNG² system detects a defect, it informs the crew of the affected train. This is done by a voice transmission over an assigned radio channel. The voice is computer-generated from previously digitized human speech. It tells the crew the Kilometerpost of the reporting SmartScanNG² system, a warning that a defect has been detected, and other defect-related information. When no defect is detected, the voice tells the crew that the train was scanned and found free of defects.

There are three types of messages. Real-time messages are announced as the train passes over the site. Post-train messages are announced after the train has left the site and all the recorded train data has been processed by the SmartScanNG² system. When enabled, there are also arrival messages. Arrival messages are announced as the train enters the site. The content and use of these three message types are railroad-specific.

The results of train scans are also stored for later use. With this stored data, the system can create formatted reports. To get them at the site, you need a computer. With a modem and a computer, you can retrieve them remotely.

1.3 General Specifications - SmartScanNG²

Maximum Train Length	Successfully scanned computer-simulated trains with axle counts greater than 4000 axles.
Input Voltage - DC	Controller Module and Chassis: 10 to 30 VDC. Maximum system current, including two bearing scanners and two wheel scanners, with train present and radio transmitting approximately 11.7 amps. Idle current 900mA.
Input Voltage - AC	100 – 130 Volts @ 15 Amps, 50-60Hz
Input Voltage Protection	Circuit Breaker, Self-Restoring Fuses, Metal Oxide Varistors, Reverse Polarity Protected
Processors	Two Embedded Processor Modules, each with the following features: Motorola ColdFire® Processor, 32-bit, 250MHz clock (125MHz bus), 64MB DDR2 RAM, 32MB non-volatile Flash, 16GB Micro SD. Non-volatile time/date, system configuration, and train storage.
Serial Communications Ports	Up to six RS-232 ports are available, depending on internal options, and one RS-485 port — all with standard male D-Sub 9 connectors.
User Accessible Inputs	2 Bearing Scanner, 2 Wheel Scanner, 2 Wheel Gating Transducer, 2 Wheel Advanced Transducer, 8 Opto-Isolated Digital, 1 Precision Ambient Temperature Probe, 1 Train Presence Detection - Internal 2-Wire Audio Overlay Track Circuit
Network	One 10/100 Mbps Ethernet port with a standard RJ45 connector for networking capabilities. One RJ45 connector for access to the optional internal Velocity Module.
Voice Communications	Internal VHF Radio Transceiver: Ritron DTX-160 – 8 channels, 6 watts, narrowband, 134MHz to 176MHz. Additionally equipped with a radio interface for customer-specified analog or NXDN™ digital mobile radio
Dual-tone Multi-frequency Decoder	DTMF decoder recognizes all standard digits — 0 through 9, #, *, A, B, C, D. (Reception of a customer-specified sequence of digits triggers a rebroadcast of the last voice announcement.)
Secure Wireless	The NG² supports wireless standards IEEE 802.11 b/g/n with a 2.4 GHz RF band power amplifier. Secure data communications with 128-bit WEP, WPA-PSK (TKIP), WPA2-PSK Authentication. Secure Wireless can be enabled/disabled from the keypad.
Operating Temperature	–40°C to +71°C, Fanless Operation, Industrial Temperature Range
Size	15.5”W x 22.0”H x 4.5”D
Weight	31 lbs.
Finish	White powder coat over stainless steel.
Manufacturer	Southern Technologies Corporation, Chattanooga, Tennessee

1.4 Cautions

Contact with electrically active parts could result in sparks, burns, and electric shock. Because of this, you should avoid all electrical hazards when installing, wiring, operating, and maintaining the SmartScanNG² system. Failure to do so could result in damage to the equipment or serious injury to you.

In operation, batteries generate and release flammable hydrogen gas, which, if ignited by a burning cigarette, naked flame, or spark, may cause a battery explosion with a dispersion of casing fragments and corrosive liquid electrolyte. So, carefully follow the manufacturer's instructions. Keep all sources of gas ignition away from the batteries and do not allow metallic articles to contact the negative and positive terminals of a battery at the same time.

1.5 Disclaimers

The correct use of this guide, the environmental conditions at the time of installation, the method of the installation itself, and the installation of customer-supplied components are beyond the control of STC. So too are the correct use and maintenance of all or part of the SmartScan system. Therefore, the installer, user, and maintainer must assume the risk of any injury that might occur during the installation, use, and maintenance of all or part of the SmartScan system. STC assumes no risk, liability, or responsibility for errors and omissions on the part of the installer, user, or maintainer.

1.6 How to Comment on This Guide

We want to hear from you. Tell us what you like or don't like about this guide. Send your comments to:

Southern Technologies Corporation
Technical Publications Department
6145 Preservation Drive
Chattanooga, Tennessee 37416-3638
USA

All comments become the sole property of STC, and none will be returned.

1.7 How to Order More Copies of This Guide

When placing an order for more copies of this guide, refer to the order number shown on the cover of this guide. To request pricing and delivery, call 423-892-3029, fax 423-499-0045, or send an email to email@southern-tech.com. Electronic copies of this guide are also available.

1.8 Standard Warranty

Systems manufactured by Southern Technologies Corporation carry a 14-month warranty from the date of shipment. Warranty is limited to repair or replacement at the sole discretion of STC of any goods found to be defective in either materials or workmanship during the 14-month period following shipment. Warranty does not apply to a product with signs of obvious abuse or a product that has been improperly installed.

STC warrants that goods represented by this warranty statement have been designed and manufactured with all reasonable care and attention to appropriate regulatory documents. STC makes no representation that the goods covered by this warranty are suitable for the application they are used for. Application of the goods is at the sole discretion of the purchaser.

The purchaser is responsible for the shipment of the defective product to STC. STC will pay the return shipping charges.

Products purchased from others but included in STC systems carry the original manufacturer's warranty, typically 12 months. Warranty claims for these products must be made directly to the original equipment manufacturer.

2.0 Defect Detection

This section describes the Exception Alarms (aka defect alarms, aka train alarms) and how they are detected. Also covered are miscellaneous train scanning features.

2.1 System Activation

System activation is the process used to detect train presence and to prepare for train scanning. It is during the scanning process that the system checks for defects.

The SmartScanNG² system is equipped with one of two primary means of train arrival detection, which are the track circuit or advance transducers. In case of a failure in the primary detection method, the gating transducers act as a backup to detect train arrival. Once the system senses a train's presence, it enters scanning mode. In other words, the system has been activated. It then opens the scanner's shutters and disables its heaters. It then waits for further evidence of a train at the site in the form of gating transducer activity.

Once the system is active, it reads pulses from the two rail-mounted gating transducers, which are designated TO1 and TO2. On the rail nearest the wayside enclosure, these transducers are mounted near and to the north or east of the bearing scanners. **TO1** is the gating transducer closest to the bearing scanner. **TO2** is the one farthest from the bearing scanner.

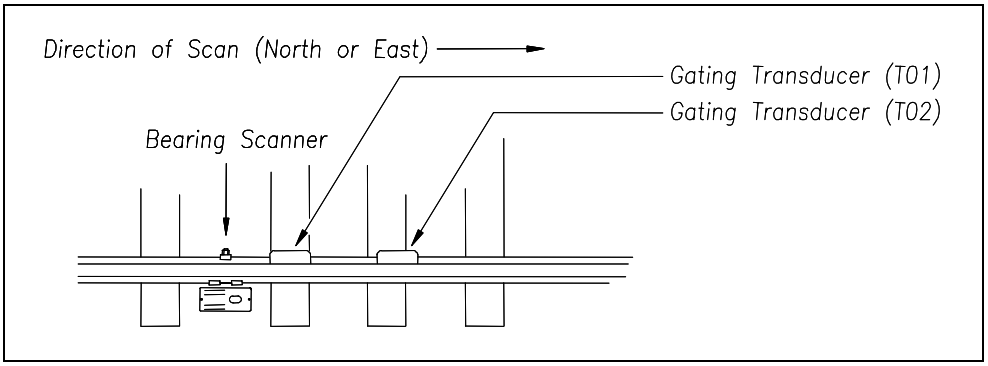

The signals from these gating transducers indicate to the system that passing wheels are in view of the scanners. Furthermore, the speed of the train is determined by using the known distance between TO1 and TO2 versus the time required for a given wheel to pass over them.

Four axles must pass over the gating transducers for the system to consider the event a valid train. This prevents maintenance equipment from generating alarms and causing unwanted voice messages on the road channel.

2.2 System Deactivation

System deactivation is the process used to detect the moment that the train exits the site. This happens in one of two ways, which is dependent upon whether the track circuit or one of the transducers has activated the system.

If the track circuit activates the system, the system waits for the track-circuit signal to be absent for ten seconds before deactivating. Likewise, if a transducer activates the system, the system waits for ten seconds of inactivity from the gating transducers before deactivating.

2.3 Speed Calculation

The train's minimum, maximum, average, and exit speeds in Kilometers per hour are shown on the reports. The system calculates the speed by knowing the distance between the two transducers versus the time that it takes a given wheel to pass over them. Calculated speeds over 99 mph (159 kph) are reported as 99 mph. If a train has fewer than eight axles, its speed is reported as 0 mph.

Trains traveling at less than 7 mph (11.3 kph) are considered "very slow." If a passing train drops below this speed threshold, the detection of Differential alarms, Pyrometer Saturation alarms, and Carside Slope alarms isn't performed. After the passage of these trains, the phrase "train too slow" is appended to the post-train message (when the Announce Slow Train option is enabled), and a diagnostic message is noted on the Train Detail and Exception Detail reports. Also, after the passage of these trains, axle count, exit speed, length of train, and the total number of cars aren't announced. This is true even when the Announce Axles option, Announce Speed option, Announce Train Length option, and Announce Number of Cars option are enabled.

The report fragment below, from the header section of a Train Detail report, shows the location of this message.

```
                    Southern Technologies Corporation
                     Next Generation Detector System
                               TRAIN DETAIL
=====================================================================
                                 .
                                 .
System Alarms
-------------------------------------
VERY Slow Train
                                 .
                                 .
                                 .
```

2.4 Train Direction

Train direction is based on whether TO1 or TO2 generated the first gating transducer pulse.

2.5 Transducer Pulse Processing

As a wheel enters the sensing range of a transducer, the transducer should respond with a positive-going pulse. The polarization of the two wires from the transducer determines if this pulse is positive or negative.

Here is a simple test that you can use to verify the correct polarization of the gating transducers. While watching the TO1 and TO2 LEDs on the display panel, have someone lay a metal wrench on one of the gating transducers. The corresponding LED should briefly light as the wrench touches the transducer. Then lift the wrench up. The LED shouldn't light as the wrench is lifted away. Repeat the test for the other transducer.

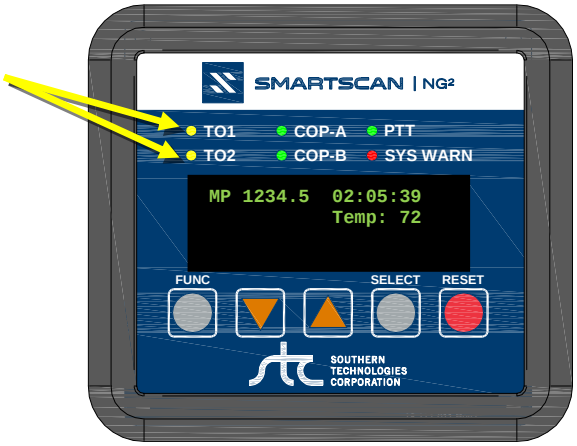

On the Interface board (in the Controller module), the transducer signals undergo RF filtering and amplification with a gain of 30. For validation, the amplified signals are fed into comparators, which create 5-VDC pulses lasting the period of time that the amplified signals remain above 620 millivolts. Processor-A receives these 5-VDC pulses through ports PA0 (TO1) and PA1 (TO2).

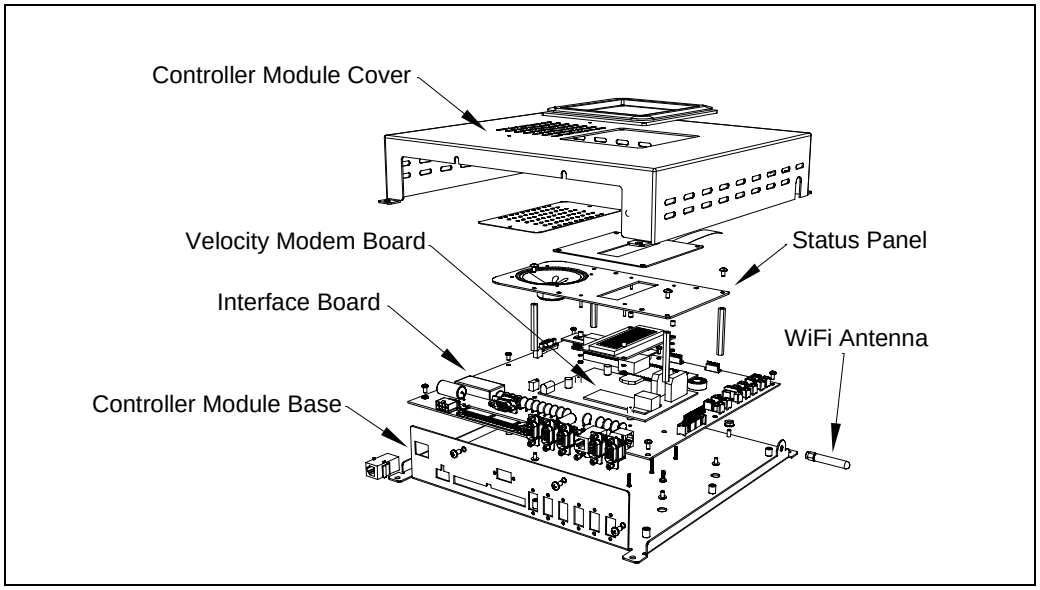

A firmware-controlled feature of the comparator circuit allows adjustment of the threshold voltage based on the speed of the train. Trains traveling less than 20 mph (32 kph) use the 620-millivolt threshold setting for maximum sensitivity. However, faster trains cause the transducers to generate a higher signal voltage, which allows the system to increase the threshold voltage. This improves the signal-to-noise ratio resulting in better signal validation.

Processor-A internally generates interrupts on the positive-going and negative-going edges of each transducer pulse coming from the comparator. The positive edge of each comparator pulse starts a timer. The timer stops with the detection of a negative-going edge. The width of each pulse is a determining factor of signal validity. Three milliseconds or greater is considered to be a valid signal. The firmware rejects any pulse width shorter than three milliseconds. Rejected pulses don't increment the transducer counters.

In normal operation, the gating transducers fire in sequence, first one, then the other. With 24-inch (61-centimeter) gating-transducer spacing, a wheel passes over both gating transducers before the next wheel passes over a gating transducer. Therefore, two consecutive pulses on the same gating transducer are not physically possible. However, in the unlikely event that a gating transducer is ever caused to fire by another source, such as electrical interference from a locomotive's traction motor, a spike counter for the gating transducer that misfired will be incremented by one. To increment the axle counter, one pulse from each gating transducer must occur in sequence.

2.6 Axle Scanning

When the train first enters the site, the SmartScanNG² system begins reading the scanners for a heat signal when the wheel is at the center of the first gating transducer. Thereafter, it starts reading the scanners 16 inches (40.6 centimeters) before the center of the first gating transducer. (See ***Appendix H - Predictive Gate Scanning*** for more information about this 16-inch (40.6-centimeter) pre-gate scanning.) The system continues reading until the wheel is at the center of the second gating transducer. This is the period that the axle is in view of the scanner. A negative-going edge of a transducer signal is an indication that the wheel is in the center of that transducer.

The firmware uses Dynamic Scan Rate sampling between the centers of the two transducers (that is, between the gate), which means that heat readings taken every 1/2 inch (1.27 centimeters) of wheel movement are used to detect alarms, regardless of the speed of the train. As a result, the system takes 48 evenly spaced samples as the wheel rolls through the 24-inch (61-centimeter) detection zone that is established by the distance between the gating transducers.

2.7 Hot Bearing Alarms

The SmartScanNG² system checks for hot bearings during the scanning process. It detects and records every Hotbox alarm that occurs. However, it only announces a maximum of four per train. For example, if a train contains seven Hotbox alarms, the Train Detail report will show all seven, but only the first four will be announced.

There are four types of Hotbox alarms.

- **Absolute**. To trigger an Absolute alarm, a bearing temperature must exceed the limit that was established using the Absolute option. This alarm limit is an offset, in degrees Fahrenheit, above the ambient temperature.
- **Differential**. To trigger a Differential alarm, a bearing temperature must exceed the opposite side bearing temperature of the same axle by a differential amount established using the Differential option.
- **Pyrometer Saturation**. To trigger a Pyrometer Saturation alarm, an interaxle bearing temperature must exceed the limit that was established using the Absolute option. If an Absolute alarm or a Differential alarm has already been triggered for the axle, a Pyrometer Saturation alarm isn't generated.
- **Carside Slope**. To trigger a Carside Slope alarm, a bearing temperature must meet or exceed a calculated alarm level and a minimum heat value. The bearing temperature must also be at least twice the opposite bearing's temperature. If an Absolute alarm or a Differential alarm has already been triggered for the axle, a Carside Slope alarm isn't generated. The minimum heat value is established using the Carside Minimum option.

The system always checks for Absolute alarms. The system also checks for Differential alarms and Pyrometer Saturation alarms. However, their detection stops when the speed of the train drops below 7 mph (11.3 kph). In order for Carside Slope alarms to be processed, they must be enabled using the Carside Slope option on the Equipment Settings menu. The detection of Carside Slope alarms also stops when the speed of the train drops below 7 mph (11.3 kph).

2.7.1 Bearing Scan Process

Bearing scanners are mounted in the center of the crib of two ties spaced at least 14 inches (35.6 centimeters) apart. Both bearing scanners are mounted in the crib immediately ahead of the gating transducers (that is, in the crib immediately to the south or west of the gating transducers). They are mounted directly opposite each other, one on each rail of the track. The hole on the top of the scanner covers faces north or east.

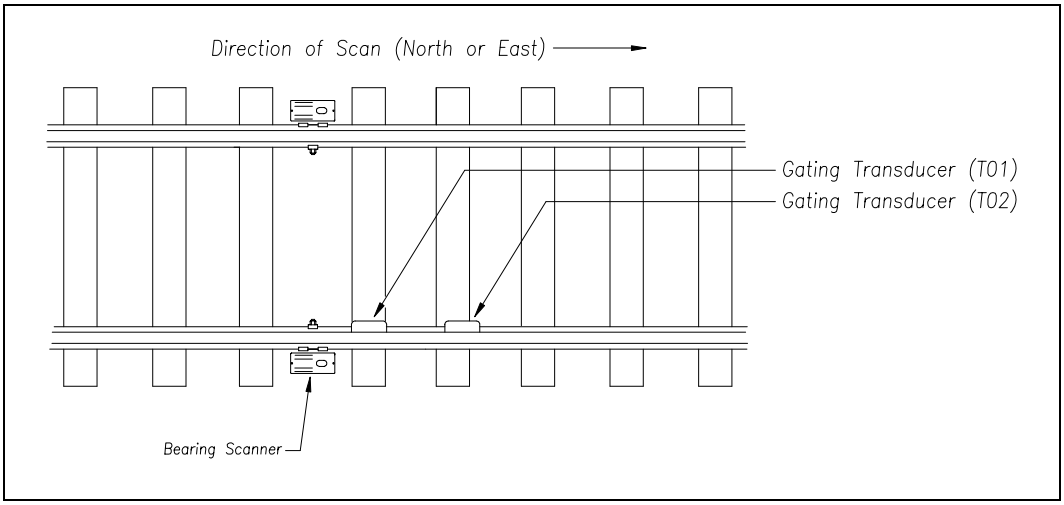

The Type II bearing scanners are aligned to scan the bottom 3.5 inches (8.9 centimeters) of the bearing housing, about 7.25 inches (18.4 centimeters) from the gauge line.

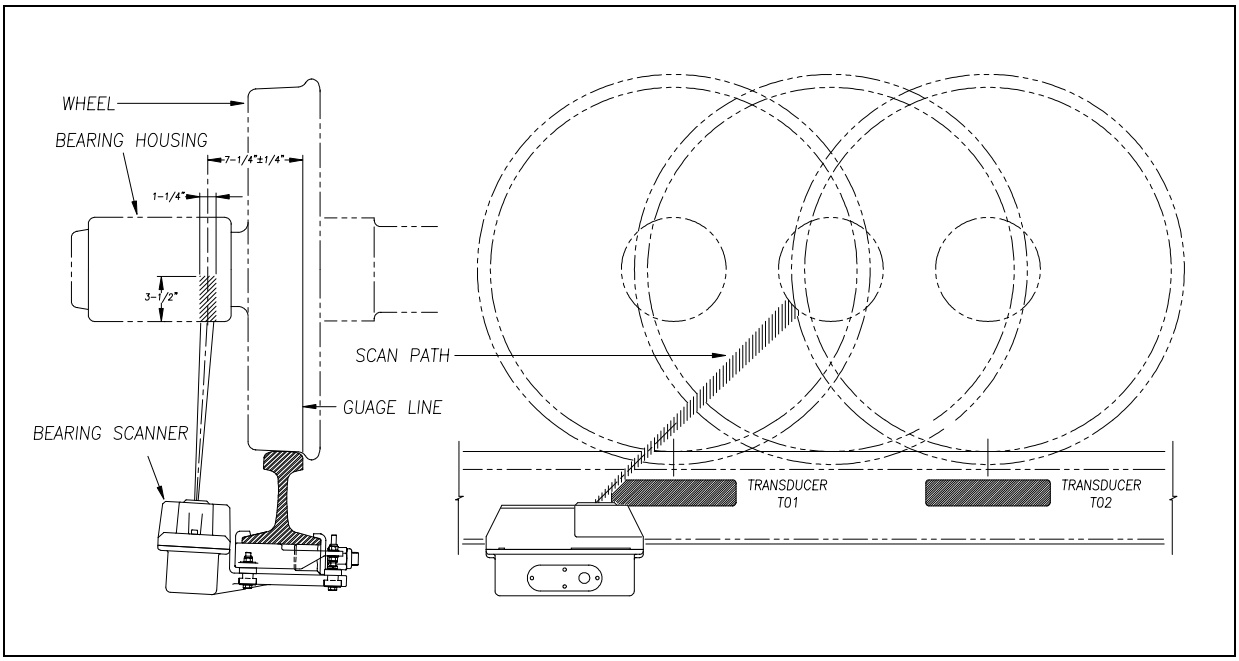

The Type III bearing scanners are aligned to scan the bottom 3.5 inches (8.9 centimeters) of the bearing housing, about 7.25 inches (18.4 centimeters) from the gauge line.

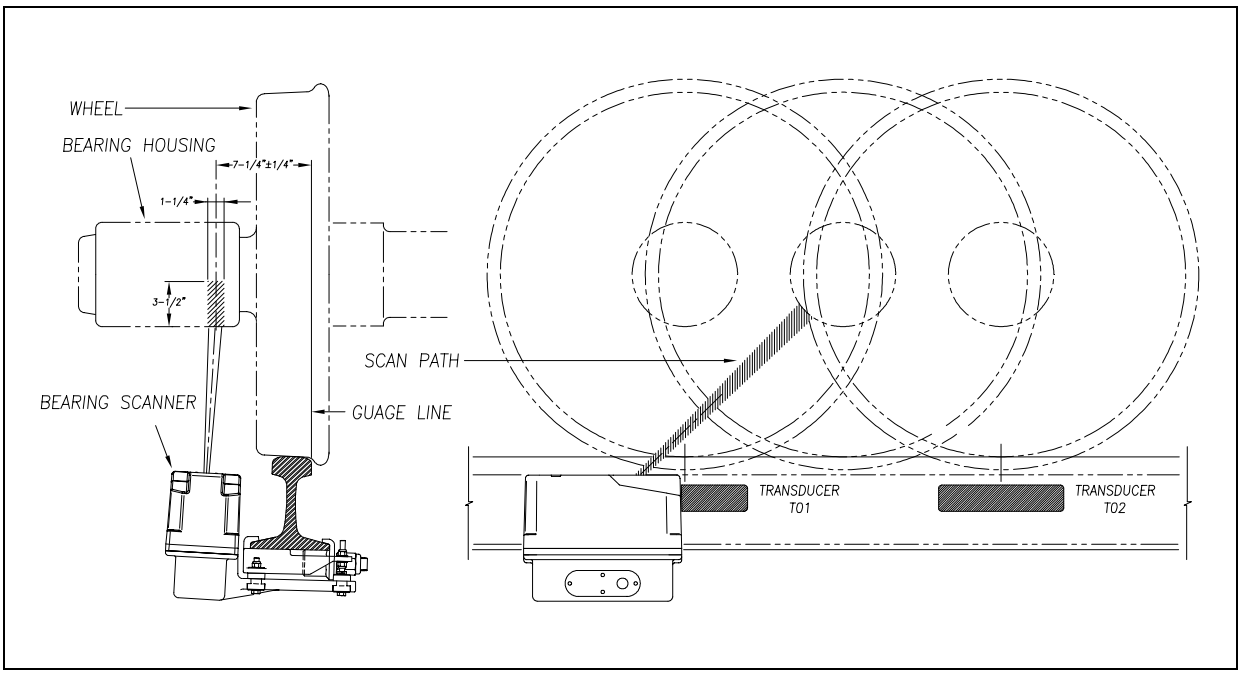

Bearing temperatures are sampled for a short period before the gate opens, to support the detection of Pyrometer Saturation alarms, and while the gate is open.

2.7.2 Referencing System

Pyrometers measure rapid changes in infrared energy emitted from objects passing through their field of view. The rail-mounted scanners are aligned to take advantage of this characteristic.

When no axle is present between the gating transducers, the scanner typically sees only the undersides of the cars passing over the site. The undersides of the cars are at or near ambient temperature, thus establishing the reference from which the elevated temperatures of bearings are measured. The pyrometers normalize during this time, producing a zero-level signal.

Occasionally, the scanners are exposed to infrared emissions that are colder than the underside of the cars. Typically, this occurs in the gaps between cars when the scanners may reference on clear sky. This could present an erroneous reference if a bearing was scanned immediately following a sky shot, resulting in an abnormally high reading for the bearing. The pyrometers have internal circuitry to prevent the reference from shifting below the established zero reference.

When a bearing passes through the field of view of the scanner, a rapid change in temperature is presented to the internal lithium tantalite crystal. This causes the signal level from the pyrometer to increase proportionally to the amount of exposed infrared energy. When an axle is between the gating transducers, the pyrometer signal is sampled at every 1/2 inch (1.27 centimeters) of wheel movement for a total of 48 samples, and the maximum signal level is stored. This signal level measured in volts is converted to a digital value and expressed in degrees Fahrenheit above ambient temperature. This value is the basis for the alarm analysis done by the system.

2.7.3 Pyrometer Linearity

The output of the pyrometers is linear across most of the operating speed range of the system. However, the output of the pyrometers is nonlinear at either end of the operating speed range. To compensate for this nonlinear output, the firmware applies a correction factor to the sampled heat value. The correction factor applied to each bearing sample is based on the speed of the bearing (axle's on-time) as it passed through the gate and on the actual value read by the pyrometer. The correction factor is derived from a table that is keyed by the axle's on-time and heat value. Due to the fast nature of this lookup table, linearity compensation is done in real-time so that detected alarms reflect the heat value after the linearity step has been done.

2.8 Hotwheel Alarms

When used, wheel scanners are mounted in the center of the crib of two ties spaced at least 14 inches (35.6 centimeters) apart. Both wheel scanners are mounted in the crib between the two gating transducers. They are mounted directly opposite each other, one on each rail of the track. The hole on the top of the scanner covers faces the center of the track.

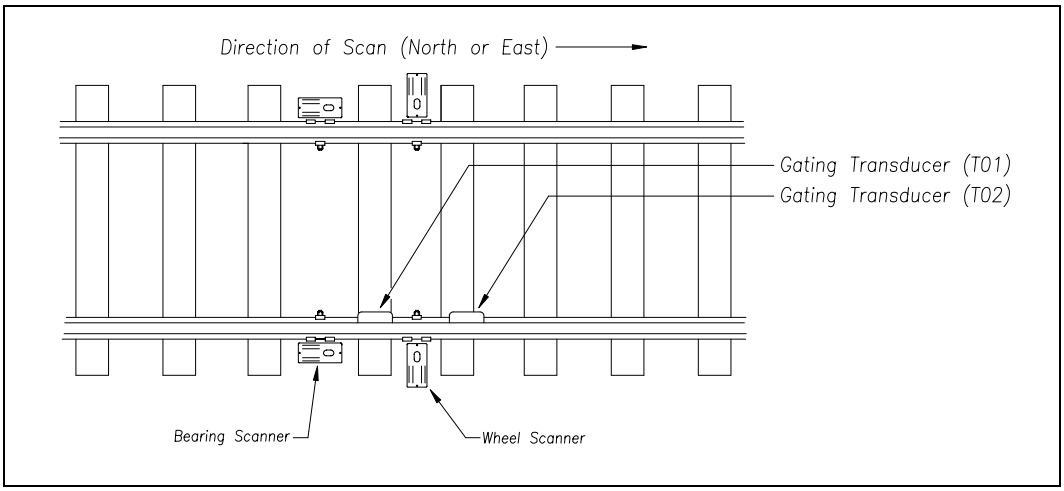

The Type II wheel scanners are aligned to scan about 4 inches (10 centimeters) above the rail.

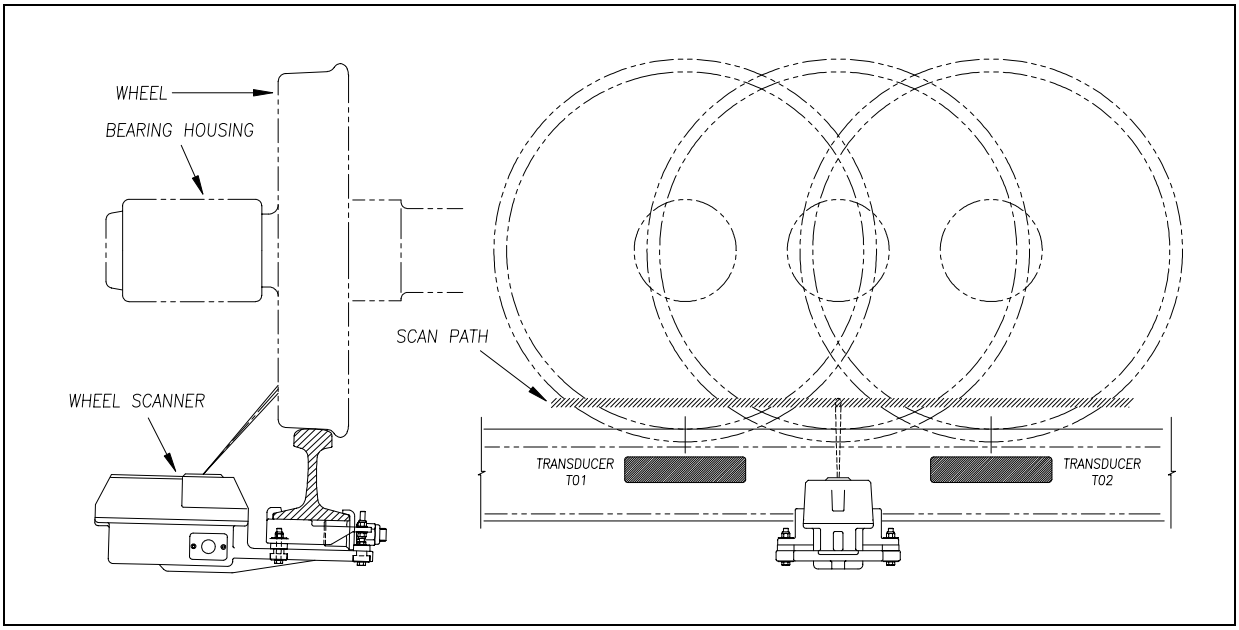

The SmartScanNG² system checks for hotwheels during the scanning process. Scan timing is controlled the same as for the bearing scanners.

Wheel scanning alarms are limited to absolute only. To trigger a Hotwheel alarm, wheel scanners must be properly installed, hotwheel detection must be enabled, and a wheel temperature must exceed the limit that was established using the Hotwheel option on the Alarm Settings menu. This alarm limit is an offset, in degrees Fahrenheit, above the ambient temperature. Hotwheel detection is enabled using the Hotwheel option on the Equipment Settings menu. When enabled, the SmartScanNG² system detects and records every Hotwheel alarm that occurs. However, it only announces a maximum of four per train. For example, if a train contains nine Hotwheel alarms, the Train Detail report will show all nine, but only the first four will be announced.

2.9 Auxiliary Alarms

The SmartScanNG² system can support input from as many as four external alarm devices. Any device that provides an open relay contact upon alarm detection can be supported by the system. Auxiliary alarms supported by the SmartScanNG² system are:

- **Dragging Equipment**. To trigger a Dragging-Equipment alarm, a dragging-equipment detector must be properly installed, dragging-equipment detection must be enabled, and the SmartScanNG² system must sense an open relay contact from the dragging-equipment detector. Dragging-equipment detection is enabled using the Dragger option on the Equipment Settings menu. When enabled, the SmartScanNG² system detects and records every Dragging-Equipment alarm that occurs on a given train. However, it only announces the first two.
- **High Load** (oversized loads). To trigger a High-Load alarm, a high-load detector must be properly installed, high-load detection must be enabled, and the SmartScanNG² system must sense an open relay contact from the high-load detector. High-load detection is enabled using the High-Load option on the Equipment Settings menu.
- When a high-load detector is configured for tripwire operation, the SmartScanNG² system only records one High-Load alarm, regardless of the high-load signal status. This is because you can only break a wire once.
- When a high-load detector is configured for light-beam operation, the SmartScanNG² system records every High-Load alarm that occurs. This involves a caveat that the system won't flag High-Load alarms on consecutive axles. At least one unalarmed axle must separate the alarmed axles. Regardless of the number of detected High-Load alarms, it only announces a maximum of two.
- The mode of operation (light beam or tripwire) isn't relevant when the SmartScanNG² system finds a Stuck High-Load Detector Pretrain alarm. When this occurs, the system flags the pretrain condition as an integrity failure, disables high-load scanning for the remainder of the train, and doesn't assign a high-load condition to any of the axles.

- **Wide Load** (shifted loads). To trigger a Wide-Load alarm, two wide-load detectors (one on each side of the track) must be properly installed, wide-load detection must be enabled, and the SmartScanNG² system must sense an open relay contact from either of the wide-load detectors. Wide-load detection is enabled using the Wide-Load option on the Equipment Settings menu.
- When a wide-load detector is configured for tripwire operation, the SmartScanNG² system only records one Wide-Load alarm, regardless of the wide-load signal status. This is because you can only break a wire once.
- When a wide-load detector is configured for light-beam operation, the SmartScanNG² system records every Wide-Load alarm that occurs. This involves a caveat that the system won't flag Wide-Load alarms on consecutive axles. At least one unalarmed axle must separate the alarmed axles. Regardless of the number of detected Wide-Load alarms, it only announces a maximum of two.
- The mode of operation (light beam or tripwire) isn't relevant when the SmartScanNG² system finds a Stuck Wide-Load Detector Pretrain alarm. When this occurs, the system flags the pretrain condition as an integrity failure, disables wide-load scanning for the remainder of the train, and doesn't assign a wide-load condition to any of the axles.

Both high-load detectors and wide-load detectors must be either trip-wire detectors or light-beam detectors. The selection of tripwire or light beam is done using the Clearance Type option on the Equipment Settings menu.

3.0 Display Panel

Located on the front of the SmartScanNG² Controller Module is the Display Panel. Its status indicators and display module provide a snapshot of the overall system health. As a convenience, the Display Panel also provides a user interface to execute some frequently used system functions (i.e., Auto Cal, Radio Test, etc.).

SmartScanNG² Display Panel

3.1 LED Indicators

There are six LED status indicators located above the OLED display.

LED	Meaning when Lit
TO1	Indicates wheel sensor TO1 is active.
TO2	Indicates wheel sensor TO2 is active.
COP-A	Indicates the status of Processor-A. If the CPU is running its program correctly, the LED blinks on and off. If the program isn't operating as expected, the LED is lit solid, or isn't lit at all.
COP-B	Indicates the status of Processor-B. If the CPU is running its program correctly, the LED blinks on and off. If the program isn't operating as expected, the LED is lit solid, or isn't lit at all.
PTT	Indicates the radio PTT is active.
SYS WARN	Indicates that a system warning has been detected.

3.2 Keypad & Display

The display assembly includes a 4-line 20-character OLED display and a five key membrane switch panel. If unused for five minutes, the display will time out to conserve power. Press any key to turn the display back on.

Keypad Switch	**Function**
FUNC	The function key toggles from the home screen to the Main Menu. It also serves as the “Back” key in the system submenus to return to the previous menu level.
▼ (Arrow Down)	Scroll down menu options.
▲ (Arrow Up)	Scroll up menu options.
SELECT	Selects the highlighted menu option.
RESET	Initiates system reset.

The home screen displays Kilometerpost, time, and temperature.

```
MP 1234.5  02:05:39
           Temp: 72
```

If a system warning has been detected, the display will indicate “Check Sys. Health Menu” at the bottom of the screen.

Menu Navigation:

- Press the **FUNC** key to toggle from the home screen to the Main Menu or to back out of the submenus.
- Use the ▲UP and ▼DOWN keys to move the ► pointer next to the desired menu option.
- Press the **SELECT** key to choose the menu option. The “↓” symbol on the display screen indicates that there are more options available if you scroll down. Likewise, the “↑” symbol indicates more options are available if you scroll up.

```
Main Menu
 ►Sys. Health Menu
  Reset Sys. Health
↓ Radio Test
```

3.3 System Health Menu

The System Health Menu provides a snapshot of the system's general health. Each system health check displays a status of "GOOD" or "BAD" based on trending information derived from system alarms, integrity failures, and other monitored data. If a system warning has been flagged, the **SYS WARN** LED will be lit, and the "Check System Health" message will be displayed on the bottom text line of the home screen.

1. From the Main Menu, place the ►pointer next to **Sys. Health Menu.**

```
Main Menu
 ►Sys. Health Menu
  Reset Sys. Health
↓ Radio Test
```

2. Press the **Select** key. The status of the following system health checks are displayed:

   NumTrains, LowMiscount, HighMiscount, AvgTemp0, AvgTemp1, AvgTemp2, AvgTemp3, ColdRail0, ColdRail1, ColdRail2, ColdRail3, Avg Miscount, and Batt. prcnt.

```
Sys. Health Menu
 ►NumTrains     Good
  LowMiscount   Good
↓ HighMiscount  Good
```

   If any of these system health checks indicate a "Bad" status, select that item to display more detailed information.

3. To reset system health, navigate to the Main Menu and place the ► pointer next to the **Reset Sys. Health.**

```
Main Menu
  Sys. Health Menu
 ►Reset Sys. Health
↓ Radio Test
```

4. Press the **Select** key. When prompted, select **Yes** to reset system warnings and zero all health check counts.

```
Are You Sure?
 ►Yes
  No
```

3.4 System Functions

Several system functions can be performed from the display panel. Available options are:

- System Health Menu
- Radio Test
- Scanner Cal. Menu
- Network Menu
- Radio IO Status
- Volume Menu
- System IO Status
- Test Train
- Tag Reader Test

3.4.1 Radio Test

To perform a radio test, go to the Main Menu and select **Radio Test**

```
Main Menu
↑►Radio Test
  Auto Cal
↓ Network Menu
```

The Radio Test option is used to broadcast a short message through the speaker and through the radio. Using this option lets you verify that the speaker and radio are working properly.

At single-track sites, the text of the message is "Testing, Detector at Kilometerpost, (*Kilometerpost number*), testing, one, two, three, four, five, four, three, two, one, testing." At double-track sites, the text of the message is "Testing, Detector at Kilometer ost, (Kilometer*post number*), track (*track designation*), testing, one, two, three, four, five, four, three, two, one, testing."

If the system isn't currently making any other voice announcements, it begins the Radio Test announcement. After the announcement finishes, the System Functions menu reappears.

If the system is currently making a voice announcement, the firmware displays the message "System Is Currently Making Voice Announcements! Try Again Later" and redisplays the System Functions menu.

While listening to the message, look at the PTT LED on the display panel.

The **PTT LED** should be lit. If this LED isn't lit, the system's ability to send a message to the radio might be inhibited by the Radio Inhibit option on the System Functions menu. If the radio is inhibited, the results of this check are invalid.

3.4.2 Auto-Calibration

The SmartScanNG² system self-calibrates its pyrometer interface circuitry. You need only put a preheated calibrated heat source on a scanner and place the system in autocalibration mode. The system then scans all pyrometer inputs until the signal from the calibrated heat source is located. The necessary adjustments to the related interface circuitry are automatically made while the system monitors its own progress by analyzing changes in the heat signals.

From the Main Menu, select **Auto Cal.** This prompt appears.

```
Searching for heat…
Searching, 150 sec.
```

Once the procedure has been completed, autocalibration mode is disengaged, and the calibration results are displayed.

For a detailed description of the auto-calibration procedures, go to **Appendix E Calibrating of Type II Scanners** or **Appendix F Calibrating of Type III Scanners**.

3.4.3 Network Menu

From the Main Menu, select the **Network Menu** option to view/change network settings.

Available options are:

DHCP server, Secure Wireless (on/off), IP Address, DHCP (on/off), TELNET port, HTTP port, and HTTPS port

3.4.4 Radio Menu

From the Main Menu, select Radio Menu to view the radio screen. This screen will display certain radio status information such as:

- “PTT Disabled” if Radio Inhibit is active
- “Holdoff Active” if holdoff is enabled
- “CD active” when radio has detected an active carrier signal

Press the **SELECT** key to initiate Radio Test.

3.4.5 Volume Menu

From the Main Menu, select **Volume Menu** to view/change speaker volume.

```
Vol: 5 [|||||     ]
Up/Down = change
Select = Radio test
Func = Back
```

There are ten volume settings (0 – 9), with level 9 being the maximum volume. Press the ▲UP key to increase the volume level. Press the ▼DOWN key to decrease the volume level.

Pressing the **SELECT** key while in Volume Menu will initiate a radio test.

The Radio Test is used to broadcast a short message through the speaker and through the radio. Using this option lets you verify that the speaker volume is at a sufficient level. At single-track sites, the text of the message is "Testing, Detector at Kilometerpost, (Kilometerpost number), testing, one, two, three, four, five, four, three, two, one, testing." At double-track sites, the text of the message is "Testing, Detector at Kilometerpost, (Kilometerpost number), track (track designation), testing, one, two, three, four, five, four, three, two, one, testing."

Press the **FUNC** key to back out of the menu.

4.0 Serial Interface

The serial interface allows **on-site** and **off-site** communication with the system. This interface is the only way to view reports and modify system parameters.

Most sites are equipped with either Ethernet or telephone service that provides remote communications capabilities. If not, you cannot communicate with the system **off-site**.

To use the interface locally, you need:

- A computer
- Communications software, which is installed on the computer
- A cable from the computer to a communications port on the Controller module

For remote access via telephone:

- A computer with communications software
- A modem, which is connected to the computer
- A nonswitched analog telephone line, which is connected to the computer's modem
- Another modem, which is connected to COM3 on the Interface board (internally) or COM3 on the Controller module (externally)
- Another nonswitched analog telephone line, which is connected to the SmartScanNG²'s modem

For remote access via network:

- A computer with communications software and internet connectivity
- An Ethernet connection at the SmartScanNG² controller

If your site uses an external modem, it must be attached to COM3 on the Controller module. But before attaching it, you must first disconnect P14 on the Interface board from the internal modem. You must next route COM3 on the Interface board to the external connector COM3 on the SmartScanNG² chassis (that is, the Controller module).

This section describes the serial interface for the SmartScanNG² systems. It covers how to enter or change the system parameters. It is necessary to go through a complete setup the first time a SmartScanNG² system is installed at a new site. (If this is a double-track site, you also need to do this for the other SmartScanNG² system.) After that, the processor (in the Controller module) retains the setup information in flash memory. During a power outage, no setup information is lost.

4.1 Main Menu

1. If **off-site**, skip to step 5.
2. If **on-site**, plug your computer into COM1.

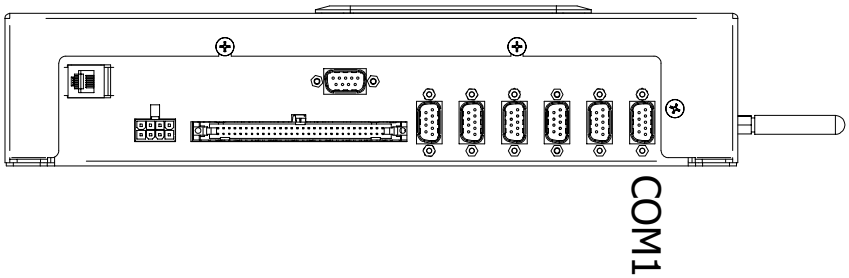

3. Turn on your computer.
4. Be sure that your computer has installed communications software, that it is set to use full-duplex, and that the baud rate is set to 115,200.

   Use your communications software to open a LOG file and capture the whole session to the file. When your session is complete, you may then view what you have done with an editor, print it with a printer, or store it for later retrieval.
5. On your computer, open a LOG file.
6. If **off-site**
   - **a** From your computer, initiate a remote connection to the site modem.
   - **b** Wait for the "connect" message from your modem.

To display the **Main Menu**:

7. Press **[Esc].**

   If the system has been set up with security passwords, this prompt appears.

```
Enter password:
```

8. Type the appropriate password to display Main Menu.

   System login with an administrative password allows all access to system menus.

   System login with user password allows access to report menus and system functions menu but restricts access to the setup menu and security menu.

9 The Main Menu

```
SmartSCAN NG2
01/10/2022 14:44:57 EST
Main Menu - Comm
----------------------------
[A] - Train Summary
[B] - Train Detail
[C] - Exception Summary
[D] - Exception Detail
[E] - System Status Report
[F] - Last Train
[G] - Train DSRs
[H] - AEI Diagnostic
[I] - Setup
[J] - Event log
[K] - System Functions Menu
[L] - Replay train
[M] - Security Menu
[X] – Exit
```

By selecting an option at the above prompt, you can:

- Produce a report.
- Replay an EOT announcement.
- Access the Setup menu. It is from the Setup menu that you can set system parameters.
- Enter pass-through mode. Pass-through mode allows you to access two SmartScanNG² systems with one modem.
- Access the System Functions menu.

If a train is at the site when the Main menu is generated, "*** Train Is Present ***" is displayed just above the menu header for the Main menu and for every other menu.

10 When done, close the LOG file.

11 To exit the serial interface and return the system to normal operation, type **X**.

When a session ends, if a modem is used, the system sends various commands to the modem to prepare it for future use. If, at any time during the disconnect procedure, lines such as "+++ATH0" appear on your screen, these are merely commands preparing the modem for further use. They shouldn't be construed as anything that is meant for the user.

4.2 Setup Menu

To display the Setup menu:

1 Be sure that the Main menu is displayed.

The Main menu looks like this.

```
SmartSCAN NG2
01/10/2022 14:44:57 EST
Main Menu - Comm
----------------------------
[A] - Train Summary
[B] - Train Detail
[C] - Exception Summary
[D] - Exception Detail
[E] - System Status Report
[F] - Last Train
[G] - Train DSRs
[H] - AEI Diagnostic
[I] - Setup
[J] - Event log
[K] - System Functions Menu
[L] - Replay train
[M] - Security Menu
[X] – Exit
```

2 Select the **Setup** to view menu options.

If the Setup menu is password protected, this prompt appears.

```
You are not logged in with admin privileges
Enter password:
```

You are given three chances to type the correct password. When you don't type the correct password in three tries, the system returns to the Main menu.

If the password is less than 20 characters long, press **[Enter]** after typing the last character. If the password is the full 20 characters in length, pressing **[Enter]** isn't necessary.

The entry of the password is **not** case-sensitive. For example, the password "abc#123" can be entered "ABC#123," "aBc#123," and so forth.

```
SmartSCAN NG2, MP/KP:1233.8, Track:West
01/10/2022 10:53:55, 14.7V, 77°F
Setup Menu
----------------------------------------
[A] - Date and Time
[B] - MP/KP
[C] - Track Designation ......... Single
[D] - Track Direction ............... N/S
[E] - Alarm Settings
[F] - Equipment Settings
[G] - Messages Settings
[H] - AEI Settings
[I] - Units Of Measure Settings
[J] - Load Default Setup Parameters
[K] - COM Port Settings
[L] - Network Settings
[M] - Velocity ................. Enabled
[N] - TIE ..................... Disabled
[O] - Polling ID ................... 128
[X] – Exit
```

To access any of the Setup menu options, type the letter corresponding to the desired menu option.

At any prompt, a timeout mechanism is in place to prevent the system from remaining in that state indefinitely. When a timeout occurs, the serial interface regresses to the previous menu. For example, if a timeout occurs in the Equipment Settings menu, the system reverts to the Setup menu. If this menu times out, the system reverts to the Main menu. If this menu times out, the system disconnects the modem connection and resumes normal operation. At the Main menu, the timeout is set for five minutes. For all other prompts, the system uses several different timeout values.

If a train is at the site when the Setup menu is generated, "*** Train Is Present ***" is displayed just above the menu header for the Setup menu.

3 To return to the Main menu, type **X**.

Changes to the system parameters aren't reflected until after you have exited the Setup menu.

4.2.1 Date and Time

To set or change the date, the time, or both:

1 Be sure that the Setup menu is displayed.

The Setup menu looks like this.

```
SmartSCAN NG2, MP/KP:1233.8, Track:West
01/10/2022 10:53:55, 14.7V, 77°F
Setup Menu
----------------------------------------
[A] - Date and Time
[B] - MP/KP
                    .
                    .
                    .
```

2 Select the Date and Time submenu.

A prompt like this appears.

```
Current Date: 01/18/2022
Enter New Date (mm/dd/yyyy): 01/10/2022
```

Dates are in **mm/dd/yyyy** format, where **mm** is month, **dd** is day, and **yyyy** is year. Type the current date. You must include slashes. For days and months from 1 through 9 you must type leading zeros. Thus, for 10 January 2022, type **01/10/2022**.

If you want to keep the displayed date, press **[Enter]**. If you don't, type a new date.

3 Type a new date <u>or</u> press **[Enter]**.

A prompt like this appears.

```
Current time is: 22:47:34
Enter new time:
```

Time is in 24-hour **hh:mm:ss** format, where 8 a.m. is 08:00:00, noon is 12:00:00, 8 p.m. is 20:00:00, and midnight is 00:00:00. Thus, for 17 seconds past 3:42 p.m., type **15:42:17**. You must include colons. For hours, minutes, and seconds from 0 through 9, type leading zeros.

If you want to keep the displayed time, press **[Enter]**. If you don't, type a new time.

4 Upon completion of the step above, you will be prompted to type the word “setup” to save any changes made.

4.2.2 Milepost/Kilometer Post (MP/KP)

To set or change the milepost/kilometer post (MP/KP) setting:

1 Be sure that the Setup menu is displayed.

The Setup menu looks like this.

```
SmartSCAN NG2, MP/KP:1233.8, Track:West
01/10/2022 10:53:55, 14.7V, 77°F
Setup Menu
----------------------------------------
[A] - Date and Time
[B] - MP/KP
[C] - Track Designation ........... West
[D] - Track Direction ............. N/S
                  •
                  •
                  •
```

2 Select the MP/KP submenu

A prompt like this appears.

```
Enter the Kilometerpost in the form ####.# (use leading zeros):
```

MP/KP is in **nnnn.n** format. If the desired MP/KP has less than five digits, type leading zeros. If the desired MP/KP is an integer, type a trailing zero. Thus, for MP/KP 30, type **0030.0**.

3 To <u>keep</u> the displayed MP/KP:

a Press **[Enter]**.

The Setup menu reappears.

b Skip the remaining steps.

4 To <u>change</u> the displayed MP/KP, type the new five-digit MP/KP, including the decimal point.

Upon completion of the step above, you will be prompted to type the word “setup” to save any changes made.

The Setup menu reappears.

4.2.3 Track Designation

To set or change the track designation:

1 Be sure that the Setup menu is displayed.

The Setup menu looks like this.

```
SmartSCAN NG2, MP/KP:1233.8, Track:West
01/10/2022 10:53:55, 14.7V, 77°F
Setup Menu
----------------------------------------
[A] - Date and Time
[B] - MP/KP
[C] - Track Designation ........... West
[D] - Track Direction .............. N/S
                  •
                  •
                  •
```

2 Select the Track Designation option.

A prompt like this appears.

```
Select a track designation:
[A] - North
[B] - South
[C] - East
[D] - West
[E] - Middle
[F] - Main1
[G] - Main2
[H] - Main3
[I] – Single
```

Select the track designation appropriate for the site by pressing the corresponding letter.

Upon completion of the step above, you will be prompted to type the word “setup” to save any changes made.

4.2.4 Track Direction

To change the track direction:

1 Be sure that the Setup menu is displayed.

The Setup menu looks like this.

```
SmartSCAN NG2, MP/KP:1233.8, Track:West
01/10/2022 10:53:55, 14.7V, 77°F
Setup Menu
----------------------------------------
[A] - Date and Time
[B] - MP/KP
[C] - Track Designation ........... West
[D] - Track Direction ............. N/S
                  •
                  •
                  •
```

2 Select Track Direction, then choose option N/S or E/W.

```
Select the Track Direction:
[1] – N/S
[2] – E/W
```

4.2.5 Alarm Settings

To set or change one or more of the alarm settings (aka alarm limits):

1 Be sure that the Setup menu is displayed.

The Setup menu looks like this.

```
SmartSCAN NG2, MP/KP:1233.8, Track:West
01/10/2022 10:53:55, 14.7V, 77°F
Setup Menu
----------------------------------------
[A] - Date and Time
[B] - MP/KP
[C] - Track Designation ........... West
[D] - Track Direction ............. N/S
[E] - Alarm Settings
                  •
                  •
                  •
```

2 Select the Alarm Settings menu.

A menu and prompt like this appears.

```
SmartSCAN NG2, MP/KP:1233.8, Track:West
01/07/2022 11:29:35, 14.7V, 77°F
Alarm Settings
----------------------------------------
[A] - Absolute ..................... 150
[B] - Differential ................. 255
[C] - Hot Wheel .................... 500
[D] - Cold Rails ..................... 3
[E] - Cold Rail Temp ............... 10
[F] - Cold Res Counter ............... 3
[G] - Differential Enabled .......... No
[H] - Advanced
[X] - Exit
```

This menu option allows you to change the various alarm limits that affect system operations. The current setting for each limit is displayed. To change one of the alarm limit settings, start by typing the letter corresponding to the desired option.

3 To leave the Alarm Settings menu and return to the Setup menu:

a Press **[Esc]** or type **X**.

The Setup menu reappears.

b Skip the remaining steps.

4 To change the displayed **absolute-alarm limit**:

The number after the word Absolute (on the Alarm Settings menu) is an offset in degrees Fahrenheit above ambient temperature. When a bearing temperature exceeds this value, the system generates an Absolute alarm.

```
Alarm Settings
----------------------------------------
[A] - Absolute ..................... 150
[B] - Differential ................. 255
                  .
                  .
                  .
```

a Select **Absolute** from the Alarm Settings menu.

This prompt appears.

```
Absolute alarm setting (default = 150)
Enter a value from 1 to 300:
```

If the new limit has less than three digits, type leading zeros to make it three digits long or press **[Enter]** after typing one or two digits.

b To not change the limit, press **[Esc]** and return to the Alarm Settings Menu.

c Type the new limit.

5 To change the displayed **differential-alarm limit**:

The number after the word Differential (on the Alarm Settings menu) is an offset in degrees Fahrenheit between rail1 and rail2. A bearing temperature is compared to the bearing temperature on the opposite end of the same axle. When the difference in temperatures exceeds the value on the screen, the system generates a Differential alarm. Checking for Differential alarms stops when the speed of the train drops below 7 mph (11.3 kph).

```
Alarm Settings
----------------------------------------
[A] - Absolute ...................... 150
[B] - Differential .................. 255
                    .
                    .
                    .
```

a Select **Differential** from the Alarm Settings menu.

This prompt appears.

```
Differential alarm setting (default = 255)
Enter a value from 1 to 300:
```

If the new limit has less than three digits, type leading zeros to make it three digits long or press **[Enter]** after typing one or two digits.

b To not change the limit, press **[Esc]** and return to the Alarm Settings menu.

c Type the new limit.

6 To change the displayed **hotwheel-alarm limit**:

The number after the words Hot Wheel (on the Alarm Settings menu) is an offset in degrees Fahrenheit above ambient temperature. When a wheel temperature exceeds this value, the system generates a Hotwheel alarm. However, when the Hotwheel option on the Equipment Settings menu is disabled, Hotwheel alarms aren't generated.

```
Alarm Settings
----------------------------------------
[A] - Absolute ...................... 150
[B] - Differential .................. 255
[C] - Hot Wheel ..................... 500
                    .
                    .
                    .
```

a Select **Hot Wheel** from the Alarm Settings menu.

A prompt like this appears.

```
Hot Wheel (N/E Bound) alarm setting (default = 500)

Enter a value from 1 to 900: 600
Setting value to 600
```

If the new limit has less than three digits, type leading zeros to make it three digits long or press **[Enter]** after typing one or two digits.

b To not change the limit, press **[Esc]** and return to the Alarm Settings menu.

c Type the new limit.

7 To change the displayed **number of allowed consecutive cold rail events**:

The number after the words Cold Rails (on the Alarm Settings menu) is the maximum number (per railside) of consecutive trains having:

- Cold Rail alarms needed to generate a Successive Cold Rails Exceeded alarm.
- Cold Resistor alarms needed to generate a Successive Cold Resistors Exceeded alarm.
- Cold Wheel Scanner alarms needed to generate a Successive Cold Wheels Exceeded alarm.
- Cold Wheel Scanner Resistor alarms needed to generate a Successive Cold Wheel Resistors Exceeded alarm.

```
                    .
                    .
                    .
[E] - Cold Rails ..................... 3
[F] - Cold Rail Temp ................ 10
[G] - Cold Res Counter ............... 3
[H] - Differential Enabled .......... No
[I] - Advanced
[X] - Exit
```

a Select **Cold Rails** from the Alarm Settings menu.

This prompt appears.

```
New Value ? Rails alarm setting (default = 3)
Enter a value from 1 to 9:
```

If the new value has less than three digits, type leading zeros to make it three digits long or press **[Enter]** after typing one or two digits.

b To not change the value, press **[Esc]** and return to step **3**.

c Type the new value.

8 To change the displayed **cold rail temperature**:

The number after the words Cold Rail Temp (on the Alarm Settings menu) is an offset, in degrees Fahrenheit, above the ambient temperature. When no bearing on a given rail generates a delta temperature reading greater than or equal to this value, the system generates a Cold Rail alarm for the given rail. There is a different Cold Rail alarm for each rail. That is, there is a Cold North Rail alarm and a Cold South Rail alarm (or, depending on track direction, a Cold East Rail alarm, and a Cold West Rail alarm).

```
                    .
                    .
                    .
[F] - Cold Rail Temp ................ 10
[G] - Cold Res Counter ............... 3
[H] - Differential Enabled .......... No
[I] - Advanced
[X] - Exit
```

a Select **Cold Rail Temp** from the Alarm Settings menu.

This prompt appears.

```
Cold Rails alarm setting (default = 10)
Enter a value from 1 to 30:
```

If the new value has less than three digits, type leading zeros to make it three digits long or press **[Enter]** after typing one or two digits.

b To not change the value, press **[Esc]** and return to step **3**.

c Type the new value.

9 To change the displayed **cold resistor counter**:

The number after the words Cold Res Counter is the maximum number (per railside) of consecutive trains, having Cold Resistor alarms, allowed before generating a Successive Cold Resistors Exceeded alarm. Under normal circumstances, cold resistor conditions represent System Alarms, not Integrity Failures. However, if the number of consecutive trains bearing identical Cold Resistor alarms equals or exceeds the Cold Resistor Counter option on the Alarm Settings menu, this condition becomes an Integrity Failure. If the number of consecutive trains bearing identical Cold Resistor alarms equals or exceeds the cold-resistor limit, the System Alarms section of the Train Detail and Exception Detail reports displays the message "Successive Cold Resistors Exceeded."

```
                    .
                    .
                    .
[G] - Cold Res Counter ............... 3
[H] - Differential Enabled .......... No
[I] - Advanced
[X] - Exit
```

a Select **Cold Res Counter**

This prompt appears.

```
Cold Res Counter alarm setting (default = 3)
Enter a value from 1 to 9:
```

If the new value has less than three digits, type leading zeros to make it three digits long or press **[Enter]** after typing one or two digits.

b To not change the value, press **[Esc]** and return to step **3**.

c Type the new value.

10 To change the displayed Differential Enabled setting, select the option to toggle the setting from “Yes” to “No.”

```
                    .
                    .
                    .
[H] - Differential Enabled .......... No
[I] - Advanced
[X] - Exit
```

11 Select the Advanced option to view and change other Alarm setting options:

Select the desired setting. After the prompt, enter a new value.

```
SmartSCAN NG2, MP/KP:1233.8, Track:West
01/07/2022 11:29:41, 14.7V, 77°F
Alarm Settings (Advanced)
----------------------------------------
[A] - Carside Slope ............... 1.31
[B] - Carside Minimum ............... 90
[C] - Res Test: Minimum Rail Avg .... 25
[D] - Res Test: Minimum Wheel Avg ... 28
[E] - Bearing DSR Capture Temp ...... 72
[F] - Wheel DSR Capture Temp ....... 361
[G] - Max Alarms ..................... 8
[X] - Exit
```

12 To change the displayed **carside-slope value**:

The number after the words Carside Slope (on the Alarm Settings menu) is the slope value used when doing carside-slope calculation/analysis. ***Section 2.0 - Defect Detection*** describes the Carside Slope alarm process. In order for Carside Slope alarms to be processed, they must be enabled using the Carside Slope option on the Equipment Settings menu. The detection of Carside Slope alarms stops if the speed of the train drops below 7 mph (11.3 kph).

```
                    .
                    .
[A] - Carside Slope ............... 1.31
[B] - Carside Minimum ............... 90
[C] - Res Test: Minimum Rail Avg .... 25
                    .
                    .
                    .
```

a Select **Carside Slope** from the Alarm Settings (Advanced) menu.

This prompt appears.

```
Carside Slope alarm setting (default = 1.31)
Enter a value from 0.01 to 2.55:
```

The slope value is in **n.nn** format. If the new value has less than three digits, type leading zeros, trailing zeros, or both. Thus, for .98, type **0.98**. For 1.2, type **1.20**.

b To not change the value, press **[Esc]** and return to step **3**.

c Type the new value.

13 To change the displayed **carside minimum heat value**:

The number after the words Carside Minimum (on the Alarm Settings menu) is a minimum offset (in degrees Fahrenheit) used when doing carside-slope calculation/analysis. If the Carside Slope option on the Equipment Settings menu is disabled during train passage, no carside-slope calculation/analysis is done, and thus no Carside Slope alarms are generated. If the Carside Slope option on the Equipment Settings menu is disabled at the time a Train Detail report is requested, no carside-slope calculation is done and, thus, no carside-slope alarm-limit lines are generated. ***Section 2.0 - Defect Detection*** describes the Carside Slope alarm process.

```
                    .
                    .
[A] - Carside Slope ............... 1.31
[B] - Carside Minimum ............... 90
[C] - Res Test: Minimum Rail Avg .... 25
                    .
                    .
                    .
```

a Select **Carside Minimum** from the Alarm Settings menu.

This prompt appears.

```
Carside Minimum alarm setting (default = 90)
Enter a value from 0 to 300:
```

If the new value has less than three digits, type leading zeros to make it three digits long or press **[Enter]** after typing one or two digits.

b To not change the value, press **[Esc]** and return to step **3**.

c Type the new value.

14 To change other Alarm Setting (Advanced) options:

Select the desired setting. After the prompt, enter a new value.

```
                    •
                    •
                    •
[C] - Res Test: Minimum Rail Avg .... 25
[D] - Res Test: Minimum Wheel Avg ... 28
[E] - Bearing DSR Capture Temp ...... 72
[F] - Wheel DSR Capture Temp ....... 361
[G] - Max Alarms ..................... 8
[X] - Exit
```

4.2.6 Equipment Settings

To set or change one or more of the equipment parameters:

1 Be sure that the Setup menu is displayed.

The Setup menu looks like this.

```
SmartSCAN NG2, MP/KP:1233.8, Track:West
01/10/2022 10:53:55, 14.7V, 77°F
Setup Menu
----------------------------------------
[A] - Date and Time
[B] - MP/KP
[C] - Track Designation ........... West
[D] - Track Direction ............. N/S
[E] - Alarm Settings
[F] - Equipment Settings
                    •
                    •
                    •
```

2 Select the Equipment Settings menu.

A menu and prompt like this appears.

```
SmartSCAN NG2, MP/KP:1233.8, Track:West
01/07/2022 11:34:18, 14.7V, 77°F
Equipment Settings
----------------------------------------
[A] - Dragger ....................... Yes
[B] - High Load ..................... No
[C] - Wide Load ..................... No
[D] - Hot Wheel ..................... No
[E] - AEI ........................... No
[F] - Hot Bearing ................... Yes
[G] - Presence Hardware ............ Yes
[H] - Advance Transducers ........... No
[I] - AC Power Off Monitor ......... Yes
[J] - Select Scanner Types
[K] - Advanced
[X] - Exit
```

The current setting for each menu option is displayed. For example, the screen above shows that Wide-Load alarm detection is inactive (NO). To change one of the settings, press the letter corresponding to the desired option. Except for the Gate Distance option, which requires a value entry, all the options toggle between two or three settings.

3 To leave the Equipment Settings menu and return to the Setup menu:

a Press **[Esc]** <u>or</u> type **X**.

The Setup menu reappears.

b Skip the remaining steps.

4 To <u>change</u> the current **dragger** (aka dragging-equipment) setting:

The Equipment Settings menu shows whether Dragging-Equipment alarm detection is enabled (YES) or disabled (NO). When disabled, Dragging-Equipment alarms won't be announced nor stored. Since they aren't stored, they can't be printed. When enabled, Dragging-Equipment alarms will be announced and stored. Since they are stored, they can be printed. In the presence of a continuous Dragger signal, the system alarms consecutive axles. When the system reaches the fifth consecutive Dragger alarmed axle, it flags the Stuck Dragger condition.

```
Equipment Settings
----------------------------------------
[A] - Dragger ....................... NO
[B] - High Load ..................... NO
[C] - Wide Load ..................... NO
                  .
                  .
                  .
```

a Select **Dragger** from the Equipment Settings menu.

The dragging-equipment setting toggles between active (YES) and inactive (NO). The Dragger option on the Equipment Settings menu changes. The Equipment Settings menu reappears.

If you want Dragging-Equipment alarm detection to occur, be sure that YES appears after the word Dragger on the Equipment Settings menu.

b Return to step **3**.

5 To change the current **high-load** setting:

The Equipment Settings menu shows whether High-Load alarm detection is active (YES) or inactive (NO). To announce High-Load alarms, YES must appear after the words High Load on the Equipment Settings menu, and Separate must appear after the words Clearance Mode on the Equipment Settings menu. To announce High-Wide alarms, YES must appear after the words High Load on the Equipment Settings menu, and Multiplexed must appear after the words Clearance Mode on the Equipment Settings menu.

```
Equipment Settings
----------------------------------------
[A] - Dragger ........................ NO
[B] - High Load ...................... NO
[C] - Wide Load ...................... NO
                    .
                    .
                    .
```

a Select **High Load** from the Equipment Settings menu.

The high-load setting toggles between active (YES) and inactive (NO). The High-Load option on the Equipment Settings menu changes. The Equipment Settings menu reappears.

If you want High-Load alarm detection to occur, be sure that YES appears after the word High-Load on the Equipment Settings menu.

b Return to Equipment Settings.

6 To change the current **wide-load** setting:

The Equipment Settings menu shows whether Wide-Load alarm detection is active (YES) or inactive (NO).

a Select **Wide Load** from the Equipment Settings menu.

The wide-load setting toggles between active (YES) and inactive (NO). The Wide-Load option on the Equipment Settings menu changes. The Equipment Settings menu reappears.

If you want Wide-Load alarm detection to occur, be sure that YES appears after the word Wide-Load on the Equipment Settings menu.

b Return to step **3**.

7 To change the current **hotwheel** setting:

The Equipment Settings menu shows whether Hotwheel alarm detection is enabled (YES) or disabled (NO). When disabled, Hotwheel alarms won't be announced nor stored. Since they aren't stored, they can't be printed. When enabled, Hotwheel alarms will be announced and stored. Since they are stored, they can be printed.

a Select **Hot Wheel** from the Equipment Settings menu.

The hotwheel setting toggles between active (YES) and inactive (NO). The Hotwheel option on the Equipment Settings menu changes. The Equipment Settings menu reappears.

b Return to step **3**.

8 To change the current **AEI** setting:

The Equipment Settings menu shows whether the AEI subsystem is enabled (YES) or disabled (NO). When tag readers and attendant antennas and cabling are present, this parameter should be set to YES so that the system knows to configure the readers and to use the AEI data transmitted from them. When there is no installed AEI subsystem attached to the SmartScanNG² system, this parameter should be set to NO.

```
                    .
                    .
                    .
[E] - AEI ........................... No
[F] - Hot Bearing .................. Yes
[G] - Presence Hardware ............ Yes
[H] - Advance Transducers ........... No
[I] - AC Power Off Monitor ......... Yes
[J] - Select Scanner Types
                    .
                    .
                    .
```

a Select **AEI** from the Equipment Settings menu.

The AEI setting toggles between enabled (YES) and disabled (NO). The AEI option on the Equipment Settings menu changes. The Equipment Settings menu reappears.

b Return to step **3**.

9 To change the **Hot Bearing** setting:

The Equipment Settings menu shows whether the Hot Bearing alarm detection is enabled (YES) or disabled (NO). When disabled, Hot Bearing alarms won't be announced nor stored. Since they aren't stored, they can't be printed. When enabled, Hot Bearing alarms will be announced and stored.

a Select **Hot Bearing** from the Equipment Settings menu.

The hot bearing setting toggles between active (YES) and inactive (NO). The Equipment Settings menu reappears.

b Return to step **3**.

10 To change the **Presence Hardware** setting:

a Select **Presence Hardware** from the Equipment Settings menu.

The Presence Hardware setting toggles between active (Enabled) and inactive (Disabled). The Equipment Settings menu reappears.

b Return to step **3**.

11 To change the **Advance Transducer** setting:

a Select **Advance Transducer** from the Equipment Settings menu.

The Advance Transducer setting toggles between Yes (Enabled) and No (Disabled). The Equipment Settings menu reappears.

b Return to step **3**.

12 To change the **AC Power Off Monitor** setting:

a Select **AC Power Off Monitor** from the Equipment Settings menu.

The AC Power Off Monitor setting toggles between Yes (Enabled) and No (Disabled). The Equipment Settings menu reappears.

b Return to step **3**.

13 To **Select Scanner Types**:

The Equipment Menu shows the scanner type currently selected for each scanner position.

a Select Scanner Types option from the Equipment Settings menu.

```
Scanner Types (changes require calibration)
----------------------------------------
[A] - North Rail: Type III
[B] - South Rail: Type III
[C] - North Wheel: Type III
[D] - South Wheel: Type III
[X] – Exit
```

Select scanner options to cycle between **Type III** and **Type II**.

Type X to return to the Equipment Settings menu.

b Return to Equipment Settings.

14 To change other equipment settings select the Equipment Settings (Advanced) option.

```
SmartSCAN NG2, MP/KP:1233.8, Track:West
01/07/2022 11:34:18, 14.7V, 77°F
Equipment Settings
----------------------------------------
[A] - Dragger ....................... Yes
[B] - High Load ..................... No
[C] - Wide Load ..................... No
[D] - Hot Wheel ..................... No
[E] - AEI ........................... No
[F] - Hot Bearing ................... Yes
[G] - Presence Hardware ............ Yes
[H] - Advance Transducers ........... No
[I] - AC Power Off Monitor ......... Yes
[J] - Select Scanner Types
[K] - Advanced
[X] - Exit
```

The Advanced menu will appear.

```
SmartSCAN NG2, MP/KP:1233.8, Track:West
01/07/2022 11:35:01, 14.7V, 76°F
Equipment Settings (Advanced)
----------------------------------------
[A] - Carside Slope ............................ No
[B] - Clearance Type ..................... Trip Wire
[C] - Clearance Mode ..................... Separate
[D] - Scanner Heater Cycle ................. Normal
[E] - Transducer Gain ...................... Normal
[F] - Resistor Test ..................... Disabled
[G] - Gate Distance ....................... 24.0 in
[H] - Dragger Debounce Time ............... 200 ms
[I] - Pre Train Dragger Dist ................. 0 ft
[J] - Pre Train High/Wide Dist ............... 0 ft
[K] - Presence Timeout Period ............... 10 sec
[L] - System Voltage ........................... 12v
[M] - Solar Powered ............................ No
[N] - Transducer / Scanner Offset Menu
[X] – Exit
```

15 To <u>change</u> the current **carside-slope** setting:

The Equipment Settings menu shows whether Carside Slope alarm detection is enabled (YES) or disabled (NO). If disabled (NO) during train passage, no carside-slope calculation/analysis is done, and thus, no Carside Slope alarms are generated. If disabled (NO) at the time a Train Detail report is requested, no carside-slope calculation is done, and thus no carside-slope alarm-limit lines are generated.

a Select **Carside Slope** from the Equipment Settings menu.

The carside-slope setting toggles between active (YES) and inactive (NO). The Carside Slope option on the Equipment Settings menu changes. The Equipment Settings menu reappears.

b Return to step **3**.

16 To change the current **clearance-type** setting:

The Equipment Settings menu shows whether the clearance type is tripwire or light beam. This option is only used for high-load detectors and wide-load detectors. Both high-load detectors and wide-load detectors must be either trip-wire detectors or light-beam detectors.

a Select **Clearance Type** from the Equipment Settings menu.

The clearance-type setting toggles between tripwire and light beam. The Clearance Type option on the Equipment Settings menu changes. The Equipment Settings menu reappears.

b Return to step **3**.

17 To change the current **clearance-mode** setting:

The Equipment Settings menu shows whether clearance mode is separate or multiplexed. This option is only used for high-load detectors and wide-load detectors. When set to separate, the alarms coming from the high-load detectors are announced as High-Load alarms, and the alarms coming from the wide-load detectors are announced as Wide-Load alarms. When set to multiplexed, the alarms coming from the high-load detectors and wide-load detectors are announced as High-Wide alarms.

a Select **Clearance Mode** from the Equipment Settings menu.

The clearance-mode setting toggles between separate and multiplexed. The Clearance Mode option on the Equipment Settings menu changes. The Equipment Settings menu reappears.

b Return to step **3**.

18 To change the current **scanner heat-cycle** setting:

The Equipment Settings menu shows whether the scanner heat-cycle feature is enabled (YES) or disabled (NO). To avoid errant heat readings caused by moisture on the pyrometer lenses, the scanners have heaters built into them. The heaters are made active for varying periods of time, depending on an ambient temperature of 80°F (26.7°C) or less.

The table below lists the heater activation times for both normal and scanner heat-cycle operation, grouped by ambient temperature.

Temperature Range in degrees Fahrenheit		**Out of every ten seconds, the number of seconds the scanner heaters are active**	
Low	**High**	**Winter Cycle Disabled**	**Winter Cycle Enabled**
--	16	4	8
17	35	3	7
36	51	2	2
52	80	1	1
80	--	Off	Off

The normal heater activation times aren't suitable for extremely cold climates, so the scanner heat-cycle feature compensates for this. When this feature is disabled, the heater controls function normally. When enabled, the system increases the normal running time for the scanner heaters. The scanner heat-cycle feature doesn't affect all the temperature ranges that the scanner heaters will activate on. It affects just the ones that are considered extremely cold.

a Select **Scanner Heat-Cycle** from the Equipment Settings menu.

The scanner heat-cycle setting toggles between enabled (YES) and disabled (NO). The scanner heat-cycle option on the Equipment Settings menu changes. The Equipment Settings menu reappears.

b Return to step **3**.

19 To change the current **transducer-gain** setting:

The Equipment Settings menu shows whether the transducer-gain setting is normal or high. Regardless of the setting, the SmartScanNG² system starts every train with the transducer input comparator set to high mode. Then, if the train is traveling 20 mph (32 kph) or more and if the transducer gain was set to normal mode, the transducer input comparator switches to normal mode. This means that it is rarely necessary to set this option to high.

When the comparator is in high mode, the comparator converts lower voltage pulses from the transducer into output pulses. This causes the system to be more sensitive to transducer output. When the comparator is in normal mode, the comparator has a better chance of filtering transducer pulses not caused by a wheel.

a Select **Transducer Gain** from the Equipment Settings menu.

The transducer-gain setting toggles between **normal** and **high**. The Transducer Gain option on the Equipment Settings menu changes. The Equipment Settings menu reappears.

b Return to step **3**.

20 To change the current **resistor-test** setting:

The Equipment Settings menu shows whether the resistor-test setting is enabled or disabled.

After a train clears a site, the system does an integrity test (when enabled) to verify that the scanners are operational and that the system can read alarm level heat. This test consists of reading the temperature of power resistors mounted to the back of the scanner shutters after the shutters close. The recorded temperature of the shutter resistors is compared against expected values, which are calculated using a combination of the amount of time the shutters were open and the system battery voltage.

When the resistor integrity test is enabled, a system algorithm determines the minimum acceptable resistor temperature values for a given train. When disabled, the resistor integrity test is not performed.

The minimum required resistor temperatures for a given train are determined by the train's duration at the site and the resistor temperature baseline profile. This profile was established 20 minutes after the user calibrates the scanners with the autocalibration function. Twenty minutes is the cooling period required to allow the resistors to return to ambient temperature after autocalibration.

```
                    .
                    .
                    .
[E] - Transducer Gain ........... Normal
[F] - Resistor Test ............ Enabled
[G] - Gate Distance ............ 24.0 in
                    .
                    .
                    .
```

a Select **Resistor Test** from the Equipment Settings menu.

The resistor-test setting toggles from enabled to disabled.

b Return to step **3**.

21 To <u>change</u> the current value for **gate distance** (aka gate width):

The Equipment Settings menu shows the number of inches between the centers of the gating transducers.

```
                    .
                    .
                    .
[E] - Transducer Gain ........... Normal
[F] - Resistor Test ............ Enabled
[G] - Gate Distance ............ 24.0 in
                    .
                    .
                    .
```

a Select **Gate Distance** from the Equipment Settings menu.

This prompt appears.

```
Gate Distance equipment setting (default = 0.0)

Enter a value between 0.0 and 48.0:
```

The gate distance is in **nn.n** format. If the new value has less than three digits, type leading zeros, trailing zeros, or both. Thus, for 2, type **020**. The system inserts the decimal point for you. The gate distance (it is usually 24.0) can be recorded in 1/10-inch increments to reflect the actual transducer spacing. Accurate gating-transducer spacing results in accurate speed calculations.

b Type the three-digit number.

The Gate Distance option on the Equipment Settings menu changes. The Equipment Settings menu reappears.

c Return to step **3**.

22 To change the **Dragger Debounce Time**:

a Select **Dragger Debounce Time** from the Equipment Settings menu.

This prompt appears.

```
Dragger Debounce Time equipment setting (default = 200 ms)
Enter a value between 0 and 999:
```

If the new value has less than three digits, type leading zeros to make it three digits long or press [Enter] after typing one or two digits.

b Return to step **3**.

23 To change the Pre Train Dragger Distance:

a Select **Pre Train Dragger Dist** from the Equipment Settings menu.

This prompt appears.

```
Pre Train Dragger Dist equipment setting (default = 0 ft)
Enter a value between 0 and 999:
```

If the new value has less than three digits, type leading zeros to make it three digits long or press [Enter] after typing one or two digits.

b Return to step **3**.

24 To change the Pre Train High/Wide Distance:

a Select **Pre Train High/Wide Dist** from the Equipment Settings menu.

This prompt appears.

```
Pre Train High/Wide Dist equipment setting (default = 0 ft)
Enter a value between 0 and 999:
```

If the new value has less than three digits, type leading zeros to make it three digits long or press [Enter] after typing one or two digits.

b Return to step **3**.

25 To **Presence Timeout Period** defines the period of time that Presence must be inactive before a train is finalized and stored. To change the Presence Timeout Period:

a Select **Presence Timeout Period** from the Equipment Settings (Advanced) menu.

This prompt appears.

```
Presence Timeout Period equipment setting (default = 10 sec)
Enter a value from 5 to 30:
```

b Return to Equipment Settings (Advanced).

26 The **System Voltage** parameter should be set to match the voltage of the battery subsystem currently powering your SmartScanNG² (either 24V or 12V). This setting determines the battery levels used to flag Low Battery and Dead Battery conditions. To change this setting:

a Select System Voltage o toggle between 24V and 12V settings.

b Return to Equipment Settings (Advanced).

27 Select the **Solar Powered** option to toggle parameter status from Yes to No. When this option is set to “Yes,” the low battery voltage will be set to 11.6, and the dead battery voltage will be set to 10.5. When this option is set to “No,” the normal low battery limit of 12.6 and dead battery limit of 11.8 will be used.

28 To view the **Transducer / Scanner Offset Menu**:

Select **Transducer / Scanner Offset Menu** from the Equipment Settings (Advanced) menu.

```
SmartSCAN NG2, MP/KP:1233.8, Track:West
01/07/2022 11:35:01, 14.7V, 76°F
Equipment Settings (Advanced)
----------------------------------------
[A] - Carside Slope ................ Yes
[B] - Clearance Type ........ Light Beam
[C] - Clearance Mode ....... Multiplexed
[D] - Winter Cycle ............ Disabled
[E] - Transducer Gain ........... Normal
[F] - Resistor Test ............ Enabled
[G] - Gate Distance ............ 24.0 in
[H] - Dragger Debounce Time ..... 200 ms
[I] - Pre Train Dragger Dist ...... 0 ft
[J] - Pre Train High/Wide Dist .... 0 ft
[K] - Presence Timeout Period ... 10 sec
[L] - System Voltage ............... 12v
[M] - Solar Powered ................. No
[N] - Transducer / Scanner Offset Menu
[X] - Exit
```

29 To <u>change</u> the **Transducer / Scanner Offset Menu** settings:

```
SmartSCAN NG2, MP/KP:1234.5, Track:Single
01/06/2022 14:42:32, 13.9V, 70°F
Transducer / Scanner Offset Menu
----------------------------------------
[A] - Transducer Type ....................... Magnetic
```

When Magnetic transducers are selected as the Transducer Type, the Transducer / Scanner Offset Menu appears as shown above. When Frauscher transducers are selected, the menu appears as shown below.

```
SmartSCAN NG2, MP/KP:1234.5, Track:Single
01/06/2022 14:42:32, 13.9V, 70°F
Transducer / Scanner Offset Menu
----------------------------------------
[A] - Transducer Type ........................ Frauscher
[B] - Rail Size ............................ 136 (67.46)
[C] - East Rail Scanner Offset ......... 22 inches (TO2)
[D] - West Rail Scanner Offset ......... 23 inches (TO2)
[E] - East Wheel Scanner Offset ........ 24 inches (TO1)
[F] - West Wheel Scanner Offset ........ 23 inches (TO1)
[X] - Exit
```

a Select Transducer Type option to change the setting (toggles from Magnetic to Frauscher).

NOTICE!

When using Frauscher transducers, the settings for rail size and scanner offset MUST be entered in order for the system firmware to accurately calculate the “Virtual Gate” of each scanner. As depicted below, The scanner offset is measured from the center of the transducer bracket to the center of the scanner mounting bracket.

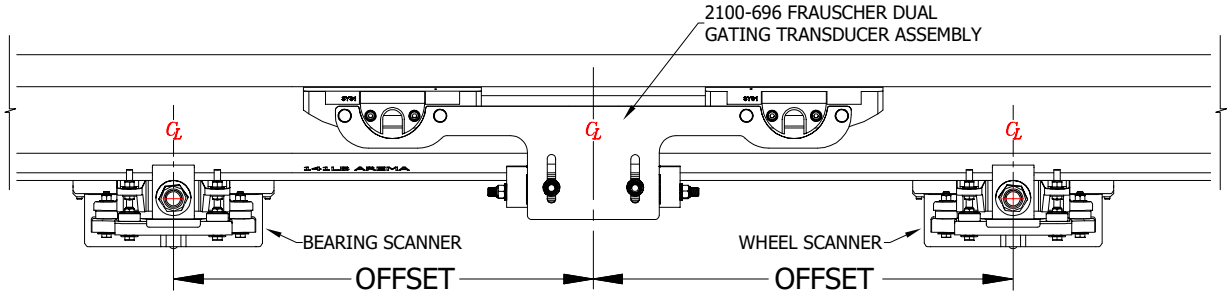

b To change the rail size, select the menu option. A prompt like this appears:

```
Select a Rail Size:
   lbs/yd (kg/m)
[A] - 100 (49.62)
[B] - 115 (57.05)
[C] - 122 (60.52)
[D] - 127 (63.00)
[E] - 132 (65.48)
[F] - 136 (67.46)
[G] - 141 (69.94)
```

Select the appropriate setting for your site.

c To set the scanner offset value for each scanner, select the menu option. A prompt like this appears.

```
East Rail Scanner Offset transducer setting (default = 22 inches)
Enter an OFFSET value from 0 to 100 inches:
```

Enter the appropriate offset setting for each scanner to the nearest inch.

Next, you will be prompted to select scanner orientation (this information is also necessary for “Virtual Gate” calculations).

```
Is the scanner closer to TO1 or TO2?
[1] - TO1
[2] - TO2
```

Enter the appropriate selection.

d Return to step **3**.

30 To view the **Car Breakout Ratio**:

The Car Breakout Ratio option, by default is hidden from the user. In order to be able to access it, the user must press the key combination Shift-1 (exclamation point).

Enter key combination Shift-1 to expose hidden option.

```
SmartSCAN NG2, MP/KP:1233.8, Track:West
01/07/2022 11:35:01, 14.7V, 76°F
Equipment Settings (Advanced)
----------------------------------------
[A] - Carside Slope ................ Yes
[B] - Clearance Type ........ Light Beam
[C] - Clearance Mode ....... Multiplexed
[D] - Winter Cycle ............ Disabled
[E] - Transducer Gain ........... Normal
[F] - Resistor Test ............ Enabled
[G] - Gate Distance ............ 24.0 in
[H] - Dragger Debounce Time ..... 200 ms
[I] - Pre Train Dragger Dist ...... 0 ft
[J] - Pre Train High/Wide Dist .... 0 ft
[K] - Presence Timeout Period ... 10 sec
[L] - System Voltage ............... 12v
[M] - Transducer / Scanner Offset Menu
(N) - Car Breakout Ratio
[X] - Exit
```

31 To change the **Car Breakout Ratio**:

a Select **Car Breakout Ratio** from the Equipment Settings menu.

This prompt appears.

```
Car Breakout Ratio equipment setting (default = 1.20)
Enter a value from 1.15 to 4.00: 1.23
Setting value to 1.23
```

Be sure to enter the decimal point in the setting. A message of “Invalid value specified” will appear if the value is outside of the valid range.

b Return to step **3**.

J.2.7 Messages

To set or change any of the message parameters:

1 Be sure that the Setup menu is displayed.

The Setup menu looks like this.

```
SmartSCAN NG2, MP/KP:1233.8, Track:West
01/10/2022 10:53:55, 14.7V, 77°F
Setup Menu

[A] – Date and Time
[B] – MP/KP
[C] – Track Designation …..... West
[D] – Track Direction …..... N/S
[E] – Alarm Settings
[F] – Equipment Settings
[G] – Messages Settings
[H] – AEI Settings
[I] – Units Of Measure Settings
[J] – Load Default Setup Parameters
[K] – COM Port Settings
[L] – Network Settings
[X] – Exit
```

2 Select the Messages Settings menu.

A menu and prompt like this appear. The options on the Messages menu are used to affect the phrases broadcast to a passing train or are used to modify the parameters associated with the rebroadcast function.

```
SmartSCAN NG2, MP/KP:1233.8, Track:West
01/07/2022 11:36:39, 14.7V, 77°F
Messages Settings

[A] – Axles …..................... Yes
[B] – Speed …..................... No
[C] – Temperature …............... Yes
[D] – Length …..................... No
[E] – Slow …..................... Yes
[F] – Power Off …................. Yes
[G] – Repeat No Defects …......... Yes
[H] – Cars Count …................ No
[I] – Customer Name …............. Yes
[J] – Arrival Message …........... No
[K] – Lft/Rt Alarm Ref …........... No
[L] – Car ID With Alarm …......... No
[M] – Integrity Failure …......... Yes
[N] – No Defects …................ Yes
[O] – Advanced
[X] – Exit
```

Enabling one or more of these options generates the ancillary messages: A (axle count), B (train speed), C (ambient temperature), D (train length), E (slow train), F (power off), and H (number of cars). The other options of the Messages menu aren't used to generate ancillary messages.

3 To leave the Messages menu and return to the Setup menu:

a Press **[Esc]** or type **X**.

The Setup menu reappears.

b Skip the remaining steps.

4 To change the **announce-axles** setting:

The Messages menu shows whether the total axle count is to be part of (YES) or not part of (NO) post-train announcements. When the Highrange Transducer Miscounts alarm or Very Slow Train alarm occurs, the system won't announce axle count, even when this option is enabled.

```
Messages Settings

[A] – Axles …..................... YES
[B] – Speed …..................... NO
[C] – Temperature …............... YES
                  .
                  .
                  .
```

a Select **Axles** from the Messages menu.

The announce-axles setting toggles between announce (YES) or not announce (NO). The Announce Axles option on the Messages menu changes. The Messages menu reappears.

b Return to step **3**.

5 To change the **announce-speed** setting:

The Messages menu shows whether the exit speed of the train is to be part of (YES) or not part of (NO) post-train announcements.

```
Messages Settings

[A] – Axles ….....................  YES
[B] – Speed ….....................  NO
[C] – Temperature ….............  YES
                    •
                    •
                    •
```

a Select **Speed** from the Messages menu.

The announce-speed setting toggles between announce (YES) or not announce (NO). The Announce Speed option on the Messages menu changes. The Messages menu reappears.

b Return to step **3**.

6 To change the **announce-temperature** setting:

The Messages menu shows whether the ambient temperature (taken at the site by the shielded temperature probe as the train leaves the site) is to be part of (YES) or not part of (NO) post-train announcements.

```
Messages Settings

[A] – Axles ….....................  YES
[B] – Speed ….....................  NO
[C] – Temperature ….............  YES
[D] – Length ….................  NO
                    •
                    •
                    •
```

a Select **Temperature** from the Messages menu.

The announce temperature setting toggles between announce (YES) or not announce (NO). The Announce Temperature option on the Messages menu changes. The Messages menu reappears.

b Return to step **3**.

7 To change the **announce-train-length** setting:

The Messages menu shows whether the train length is to be part of (YES) or not part of (NO) post-train announcements. When the Highrange Transducer Miscounts alarm or Very Slow Train alarm occurs, the system won't announce the length of train, even when this option is enabled.

```
Messages Settings

[A] – Axles …..................... YES
[B] – Speed …..................... NO
[C] – Temperature …..............  YES
[D] – Length …..................... NO
[E] – Slow …..................... YES
                  •
                  •
                  •
```

a Select **Length** from the Messages menu.

The announce-train-length setting toggles between announce (YES) or not announce (NO). The Announce Train Length option on the Messages menu changes. The Messages menu reappears.

b Return to step **3**.

8 To change the **announce-slow-train** setting:

The Messages menu shows whether a message indicating a slow train (one going 7 mph or slower) is to be part of (YES) or not part of (NO) post-train announcements.

a Select **Slow** from the Messages menu.

The announce-slow-train setting toggles between announce (YES) or not announce (NO). The Announce Slow Train option on the Messages menu changes. The Messages menu reappears.

b Return to step **3**.

9 To change the **announce-power-off** setting:

The Messages menu shows whether the power-off message is to be part of (YES) or not part of (NO) post-train announcements. The generation of this message depends on battery voltage, not AC power. It is generated whenever the voltage coming from the battery is less than 12.6 VDC. AC power need never have been off to cause this to happen. However, most times, it does indicate that AC power has been off, causing the battery to be drained.

a Select **Power Off** from the Messages menu.

The announce-power-off setting toggles between announce (YES) or not announce (NO). The Announce Power Off option on the Messages menu changes. The Messages menu reappears.

b Return to step **3**.

10 To change the **repeat-no-defect-message** setting:

The Messages menu shows whether the no-defect message is to be repeated (YES) or not repeated (NO).

```
                    •
                    •
                    •

     F) Power Off…................ YES
     G) Repeat No Defects…......... YES
     H) Cars Count…............... NO

                    •
                    •
                    •
```

a Select **Repeat No Defects** from the Messages menu.

The repeat-no-defect-message setting toggles between enabled (YES) and disabled (NO). The Repeat No Defects option on the Messages menu changes. The Messages menu reappears.

b Return to step **3**.

11 To change the **announce-number-of-cars** setting:

The Messages menu shows whether the number of cars is to be part of (YES) or not part of (NO) post-train announcements.

a Select **Cars Count** from the Messages menu.

The announce-number-of-cars setting toggles between announce (YES) or not announce (NO). The Announce Number of Cars option on the Messages menu changes. The Messages menu reappears.

b Return to step **3**.

12 To change the **announce-customer-name** setting:

The Messages menu shows whether the customer's railroad name is to be part of (YES) or not part of (NO) of all announcements.

```
                    •
                    •
                    •
     H) Cars Count…............... NO
     I) Customer Name…............ YES
     J) Arrival Message…........... YES

                    •
                    •
                    •
```

a Select **Customer Name** from the Messages menu.

The announce-customer-name setting toggles between announce (YES) or not announce (NO). The Announce Customer Name option on the Messages menu changes. The Messages menu reappears.

b Return to step **3**.

13 To change the **announce-arrival-message** setting:

The Messages menu shows whether an arrival message announces (YES) or doesn't announce (NO) train arrival at the site.

a Select **Arrival Message** from the Messages menu.

The announce-arrival-message setting toggles between announce (YES) or not announce (NO). The Announce Train Arrival option on the Messages menu changes. The Messages menu reappears.

b Return to step **3**.

14 To change the **left-right-alarm-reference** setting:

The Messages menu shows whether the alarm reference is announced as left or right (YES) or as north, south, east, or west (NO).

a Select **Lft/Rt Alarm Ref** from the Messages menu.

The left-right-alarm-reference setting toggles between YES and NO. The Announce Left-Right Alarm Reference option on the Messages menu changes. The Messages menu reappears.

b Return to step **3**.

15 To change the **announce-car-identification** setting:

The Messages menu shows whether car-identification information is to be announced (YES) or not announced (NO). When this option is set to YES and an Exception Alarm is found on a car, the car-identification information is included in the post-train announcement for the train having the Exception Alarm. This, of course, will only happen if the AEI option on the Equipment Settings menu is enabled (YES) and the AEI subsystem is functioning properly during train passage.

```
                    •
                    •
                    •
[K] – Lft/Rt Alarm Ref …........... No
[L] – Car ID With Alarm …........... No
[M] – Integrity Failure …......... Yes
[N] – No Defects …................ Yes
[O] – Advanced
[X] – Exit
```

a Select **Car ID With Alarm** from the Messages menu.

The announce-car-identification setting toggles between enabled (YES) and disabled (NO). The Announce Car Identification option on the Messages menu changes. The Messages menu reappears.

b Return to step **3**.

16 To change the Integrity Failure:

The Integrity Failure **option** on the Messages menu shows whether the **Integrity Failure** option is enabled (Yes) or disabled (No). When set to “No”, it will suppress the end-of-train announcement when there are no alarms, but an Integrity Failure condition is detected. For trains that have an alarm and Integrity Failure, the end-of-train announcement will be made for the alarms, but the “Integrity Failure” phrase will be omitted.

```
                    •
                    •
                    •
[M] – Integrity Failure ……..... Yes
[N] – No Defects ……..............  Yes
[O] – Advanced
[X] – Exit
```

To leave the Messages menu and return to the Setup menu, press **[Esc]**.

17 To change the **No Defects** setting:

The No Defects **option** on the Messages menu shows whether the **No Defects** option is enabled (Yes) or disabled (No). When set to “No,” it will suppress the end-of-train announcement when there are no alarms and no Integrity Failures (when a “No Defects” message should be announced).

```
                    •
                    •
                    •
[N] – No Defects ……..............  Yes
[O] – Advanced
[X] – Exit
```

To leave the Messages menu and return to the Setup menu, press **[Esc]**.

18 To change other message settings, select Messages Settings (Advanced):

This submenu appears.

```
SmartSCAN NG2, MP/KP:1233.8, Track:West
01/07/2022 11:38:57, 14.7V, 77°F
Messages Settings (Advanced)

[A] – Announce Hot Wheels ……..... Yes
[B] – Announce High/Wide ……..... Yes
[C] – Request EOT Timer ……..... 10 min
[D] – Rebroad DTMF Code ……..... 123
[E] – Num EOT Repeats ……..... 1
[F] – EOT Repeat Delay ……..... 15 sec
[X] – Exit
```

19 To change the **Announce Hot Wheels** or **Announce High/Wide** settings, select the option to toggle from Yes to No.

20 To change the **repeat-EOT-message-timeout-period** setting:

The Messages menu shows a value for the repeat-timeout-period setting. If a nonzero value is shown, the value is the number of minutes that you have to request a repeat of the last end-of-train (EOT) message. If zero is shown, the last EOT message is always available for rebroadcast. The train crew makes the actual request for rebroadcast. The repeated message has the word “rebroadcast” at the beginning and end of the message.

a Select **Request EOT Timer** from the Messages menu.

This prompt appears.

```
Request EOT Timer message setting (default = 10)
Enter a value between 0 and 999:
```

If the new limit has less than three digits, type leading zeros.

b Type the three-digit value.

If you type 000, the last EOT message is always available for rebroadcast. If you type 240, the train crew has four hours (that is, 240 minutes) to request a repeat of the last EOT message.

c Return to step **3**.

21 To change the **rebroadcast-DTMF-code** setting:

The Messages menu shows the rebroadcast-DTMF-code setting. The stored DTMF code is the touchtone digits that trigger a rebroadcast. Up to three digits may be entered into this setup parameter. The SmartScanNG² system monitors radio traffic. When it receives the proper DTMF code, it will rebroadcast the last end-of-train message, provided the request EOT timer hasn’t expired.

```
                    .
                    .
                    .
[D] – Rebroad DTMF Code ……..... 123
[E] – Num EOT Repeats ……..... 1
[F] – EOT Repeat Delay ……..... 15 sec
[X] – Exit
```

a Select **Rebroad DTMF Code** from the Messages menu.

This prompt appears.

```
Rebroad DTMF Code message setting (default = 123)
Enter a DTMF code (Esc to clear):
```

b Type the new DTMF code or press **[Esc]**.

c If you typed one or two digits, press **[Enter]**.

The Rebroadcast DTMF Code option on the Messages menu changes, and the Messages menu reappears. If you typed only nondigits and then pressed **[Enter]**, the rebroadcast function would be turned off.

d Return to step **3**.

22 To change the **number-of-repeats** setting:

The Messages menu shows a value for how many times the EOT announcement should be repeated. Valid values range from 0 through 5. When set to zero, the EOT announcement is spoken once with no repeats. When set to five, the EOT announcement is spoken once with five repeats for a total number of six times.

```
                    •
                    •
                    •
[D] – Rebroad DTMF Code …......... 123
[E] – Num EOT Repeats …............ 1
[F] – EOT Repeat Delay …........ 15 sec
[X] – Exit
```

a Select **Num EOT Annc Repeats** from the Messages menu.

This prompt appears.

```
Num EOT Repeats message setting (default = 2)
Enter a value between 0 and 5:
```

b To not change the value, press **[Esc]** and return to step **3**.

c Type a digit less than 6.

All typed nondigits are ignored.

If you type a value greater than 5, this error message and prompt appear.

```
Invalid value specified
```

If you type an acceptable value, the Number of Repeats option on the Messages menu changes, and the Messages menu reappears.

d If you get an error message, return to step **b**.

e If you don't get an error message, return to step **3**.

23 To change the time-between-repeats setting:

The Messages menu shows a value for how many seconds should elapse between EOT announcement repeats. Valid values range from 0 through 360.

```
                    •
                    •
                    •
[D] – Rebroad DTMF Code …......... 123
[E] – Num EOT Repeats …............ 1
[F] – EOT Repeat Delay …........ 15 sec
[X] – Exit
```

a Select **EOT Repeat Delay** from the Messages menu.

This prompt appears.

```
EOT Repeat Delay message setting (default = 15)
Enter a value between 0 and 999:
```

If the new value has less than three digits, type leading zeros to make it three digits long or press **[Enter]** after typing one or two digits.

b To not change the value, press **[Esc]** and return to step **3**.

4.2.8 AEI Reader Parameters

The AEI reader parameters directly affect how the AEI readers operate to acquire tags while a train is passing the site.

To set or change any of the AEI reader parameters:

1 Be sure that the Setup menu is displayed.

The Setup menu looks like this.

```
                    .
                    .
                    .
[H] - AEI Settings
[I] - Units Of Measure Settings
[J] - Load Default Setup Parameters
[K] - COM Port Settings
[L] - Network Settings
[X] - Exit
```

2 Select **AEI Settings** to access menu options.

```
AEI Settings
----------------------------------------
[A] - ID Separation ............... 2 IDs
[B] - Consecutive Reads ........ 2 Reads
[C] - MPRR Frequency ....... 915.000 MHz
[D] - MPRR Attenuation ............... 0
[E] - Multi-Track Tag Filter ... Disable
[F] - AEI Reader Interface
[X] – Exit
```

- **ID Separation** specifies the number of intervening tags that must be read and reported before a given tag is reported again. Valid values are 1, 2, 3, and 4. The default is 2.
- **Consecutive Reads** specifies the number of times that a tag must be read before it is considered a valid (reportable) tag. Valid values are 1, 2, 3, and 4. The default is 2.

- **MPRR Frequency** specifies the transceiver frequency of the MPRR reader.

> **NOTE:** Where multiple AEI tag readers are collocated, their transceiver frequencies must be separated by at least 2 MHz.

- **MPRR Attenuation** sets the RF attenuation in 1 dB increments over a range of 10 dB from a maximum output of 2 W at 0-dB attenuation to a minimum of 200 mW output at 10-dB attenuation.
- The **Multi-Track Tag Filter**, when enabled, uses firmware algorithms to filter cross-track reads based on appended timestamps and tag data shared from adjacent readers.
- The **AEI Reader Interface** allows for direct communication with the AEI reader and is used primarily for diagnostic purposes.

3 To change the **ID Separation** parameter:

Select the **ID Separation** option to toggle from 1 to 2, from 2 to 3, from 3 to 4, or from 4 to 1.

4 To change the **Consecutive Reads** parameter:

Select the **Consecutive Reads** option to toggle from 1 to 2, from 2 to 3, from 3 to 4, or from 4 to 1.

5 Select the **MPRR Frequency** setting to change the operating frequency.

This message appears.

```
Select a frequency:
[A] - 903.750 MHz
[B] - 911.500 MHz
[C] - 915.000 MHz
[D] - 918.500 MHz
[E] - 921.500 MHz
```

Enter frequency selection. The AEI Reader Parameters menu reappears.

6 Select **MPRR Attenuation** to attenuate the RF output signal.
This message appears.

```
MPRR Attenuation AEI setting (default = 0)
Enter a value between 0 and 10:
```

Enter a value “NN” (between 1 and 10), including leading zeros. This parameter sets the RF attenuation in 1 dB increments over a range of 10 dB from a maximum output of 2 W at 0-dB attenuation to a minimum of 200 mW output at 10-dB attenuation.

7 Select **Multi-Track Tag Filter** to toggle between **Enabled** and **Disable**.

When enabled, firmware algorithms are utilized to filter out cross-track reads.

8 To enter the **AEI reader interface**, select the option.
This message appears.

```
Entering AEI Reader Interface
<Type EXIT to quit>
```

9 To leave the AEI reader interface:

a Type **EXIT**

b Press **[Enter]**.

10 To leave the AEI Reader Parameters menu and return to the Setup menu, type **X**.

This prompt appears.

```
Initialize Reader now (Y/N)
```

11 To initialize the reader, type **Y**.

The Setup menu reappears.

12 To not initialize the reader, type **N**.

The Setup menu reappears.

4.2.9 Units of Measure

To change the Units of Measure **Settings**:

1 Be sure that the Setup menu is displayed.

The Setup Menu looks like this.

```
                    :
                    :
                    :
[I] - Units Of Measure Settings
[J] - Load Default Setup Parameters
[K] - COM Port Settings
[L] - Network Settings
[X] - Exit
```

2 Select **Units of Measure**.

A prompt like this appears.

```
SmartSCAN NG2, MP/KP:1233.8, Track:West
01/07/2022 11:41:12, 14.7V, 77°F
Units Of Measure Settings
----------------------------------------
[A] - Location ........... Kilometerpost
[B] - Date Format ............... Metric
[C] - Speed ..................... Metric
[D] - Temperature ............... Metric
[E] - Length .................... Metric
[X] – Exit
```

Shown above are the parameters currently defined in the system. It shows how the system will report the date, ambient temperature, speed, and length of train. However, these parameters have no effect on the announcement of messages. Metric is the default setting for all units of measure.

Select the Location option to toggle the setting between “Kilometerpost” (Metric) and “Milepost” (English).

Date is reported in either **dd/mm/yy** (Metric) or **mm/dd/yy** (English) format. Select the Date Format option to toggle between what is shown and its other possibility.

Speed is reported in either miles per hour (**mph**) (English) or kilometers per hour (**kph**) (Metric). Select this option to toggle between what is shown and its other possibility.

Ambient temperature is reported in either degrees **Celsius** (C) (Metric) or degrees **Fahrenheit** (F) (English). Select this option to toggle between what is shown and its other possibility.

Length of train is reported in either **feet** (ft) (English) or **meters** (m) (Metric). Select this option to toggle between what is shown and its other possibility.

4.2.10 Load Default Setup Parameters

An option to load default setup parameters was included to assist installers in setting up a new system. When this menu item is selected, the parameters listed below are assigned the values listed below. A "yes" after a parameter means that it is "enabled." A "no" means that it is "disabled."

```
Alarm Settings
-----------------------------------------------------------------------------
Absolute....................... 180     Differential................... 130
Hot Wheel...................... 650     Cold Rails..................... 1
Cold Rail Temp................. 10      Cold Res Counter................ 1
Differential Enabled........... Yes

Equipment Settings
-----------------------------------------------------------------------------
Dragger........................ No      Hot Wheel...................... Yes
Hot Bearing.................... Yes     High Load...................... No
Wide Load...................... No      AEI............................ Yes
Presence Hardware.............. Yes     Advance Transducers............ No
AC Power Off Monitor........... Yes

Messages Settings
-----------------------------------------------------------------------------
Arrival Message................ No      Customer Name................. Yes
Axles.......................... No      Speed......................... No
Temperature.................... No      Slow.......................... No
Power Off...................... No      Repeat No  Defects............ No
Length......................... No      Cars Count.................... No
Lft/Rt Alarm Ref............... No      Car ID With Alarm............. No
Integrity Failure.............. No      No Defects.................... No

AEI Settings
-----------------------------------------------------------------------------
Tag Reader Type............. MPRR/X     ID Separation................... 2
Consecutive Reads............... 2      RF Frequency (MHz)......... 915.000
RF Attenuation (dB)............. 0      Multi-Track Tag Filter.... Disabled
```

To load the default setup parameters:

1. Be sure that the Setup menu is displayed.

   The Setup menu looks like this.

```
                    .
                    .
                    .
  [J] - Load Default Setup Parameters
  [K] - COM Port Settings
  [L] - Network Settings
  [X] - Exit
```

2. Select **Load Default Setup Parameters**.

   This prompt appears.

```
 ************************************************************
 * Warning! You are about to load default setup parameters! *
 ************************************************************

 Are you sure? (y/n)
```

3. To not load default setup parameters:

   Type **N**.

   The Setup Menu will be redisplayed.

4. To load default setup parameters:

   Type **Y**.

   This message appears, followed by the Setup menu.

```
  Are you sure? (y/n)
  This will save the settings.
  Please type 'setup' to save settings.
  Press escape to abandon changes.
  >
```

   Loading takes a few seconds. When finished, the Setup menu reappears.

4.2.11 COM1, COM2, COM3, COM4, & COM6

To change the parameters for serial port **COMx**:

1 Be sure that the Setup menu is displayed.

The Setup menu looks like this.

```
                    •
                    •
                    •
[J] - Load Default Setup Parameters
[K] - COM Port Settings
[L] - Network Settings
[X] - Exit
```

2 Select the COM Port Settings submenu to view options.

```
SmartSCAN NG2, MP/KP:1233.8, Track:West
01/07/2022 13:04:38, 14.7V, 76°F
COM Port Settings
----------------------------------------
[A] - COM1 19200
[B] - COM2 19200
[C] - COM3 19200
[D] - COM4 19200
[E] - COM6 57600
[F] - RS485 9600
[G] - Page Lines ..................... 30
[X] - Exit
```

Select the **COMx** option to modify current settings.

```
Uart Settings
----------------------------------------
[A] - Baud Rate ................. 115200
[B] – Flow Control .............. None
[X] – Exit
```

3 To change the **Baud Rate**, select the option to incrementally step through the selection options. Available settings are: 150, 300, 600,1200, 2400, 4800, 9600, 19200, 38400, 57600, and 115200.

4 To change the Flow Control setting, select the option to incrementally step through available options of None, HW (hardware), or SW (software).

5 If you are done changing the parameters for **COMx**, type **X**.

The Setup menu reappears.

4.2.12 Network Settings

To change the **Network Settings**:

1 Be sure that the Setup menu is displayed.

The Setup Menu looks like this.

```
                    .
                    .
                    .
[J] - Load Default Setup Parameters
[K] - COM Port Settings
[L] - Network Settings
[X] - Exit
```

2 Select the **Network Settings** menu.

A menu and prompt like this appear. To access/change any of the menu options, type the letter that corresponds to the desired setting.

```
SmartSCAN NG2, MP/KP:1233.8, Track:West
01/07/2022 13:06:10, 14.7V, 76°F
Network Settings
----------------------------------------
[A] - IP Settings
[B] - Use Wifi ....................... No
[C] - Wifi Inactivity Timeout ... 10 min
[D] - HTTP Port ...................... 80
[E] - HTTPS Port .................. 8080
[F] - FTP Port ....................... 21
[G] - TELNET Port .................... 23
[H] - Load Default Network Settings
[I] - Ping
[X] – Exit
```

3 Select the **IP Settings** menu to view/change settings. The menu looks like this.

```
SmartSCAN NG2, MP/KP:1233.8, Track:West
01/07/2022 13:10:56, 14.7V, 77°F
IP Settings
----------------------------------------
[A] - Use Static Address ............ No
[B] - Static IP ......... 192.168.13.111
[C] - Static Mask ........ 255.255.255.0
[D] - Default Gateway ... 192.168.13.100
[E] - DNS Server ........... 192.168.1.1
[X] – Exit
```

Use Static Address This parameter specifies whether the SmartScanNG² uses its configured Static IP address for external Ethernet communications (Yes) or retrieves its external IP address from a DHCP server (No).

Static IP This parameter specifies the IP address to use to connect to the SmartScanNG² when the Use Static Address option is set to Yes.

Static Mask This parameter specifies the subnet mask to use when the Use Static Address parameter is set to Yes.

Default Gateway This option specifies the address of the remote server/router through which communications with the SmartScanNG² will be routed.

DNS Server This parameter specifies the Domain Name Server that the SmartScanNG² can use for lookup services.

4 **HTTP Port** This parameter is used to specify the TCP port number for the SmartScanNG²'s HTTP interface. This is the interface/port through which the SmartScanNG² serves its Web page interface.

5 **HTTPS Port** This parameter is used to specify the port number for the SmartScanNG²'s secure HTTP interface.

6 **FTP Port** This parameter is used to specify the TCP port number that the SmartScanNG² uses for communication via the FTP protocol.

7 **TELNET Port** This parameter specifies the TCP port number that the SmartScanNG² uses for communication via the Telnet protocol. The SmartScanNG²'s serial-based menus are available through this port and protocol.

8 **Load Default Network Settings.** To set the SmartScanNG²'s network parameters to their default configuration, select the Load Default Network Settings option from the Network Settings menu

```
Network Settings
----------------------------------------
[A] – IP Settings
[B] - HTTP port ..................... 80
[C] - HTTPS port .................. 8080
[D] - FTP port ...................... 21
[E] - TELNET port ................... 23
[F] - Load default network settings
[X] – Exit
```

This option presents a warning message and requires a Y/N confirmation before changing the parameters. Answering 'N' abandons the changes. Answering 'Y' proceeds to the standard prompt requiring the "setup" password to save the changes.

```
*************************************************************
* Warning! You are about to load default network parameters! *
*************************************************************
Are you sure? (y/n)
```

```
SmartScanNG² Default Network Settings
HTTP port   80
HTTPS port   8080
FTP port   21
TELNET port   23
External Ethernet Default Settings
Use static address    Yes
Static IP    192.168.9.191
Static mask     255.255.255.0
Default gateway  192.168.9.1
DNS Server   192.168.9.1
```

9 Select the Ping option to ping an IP address.

A successful ping will appear like this:

```
Enter an IP to ping: 10.14.22.50
Pinging '10.14.22.50'... Success! (Response took 0 ticks.)
```

An unsuccessful ping will appear like this:

```
Enter an IP to ping: 10.14.22.27
Pinging '10.14.22.27'... Failed!
```

4.2.13 Velocity Settings

Select the Velocity option to change the current setting**.**

```
                    :
                    :
                    :
  [M] - Velocity ................. Enabled
  [N] - TIE ..................... Disabled
  [O] - Polling ID ................... 128
  [X] – Exit?
```

Select the Enabled or Disabled setting.

Select Velocity Port:
[1] - Disabled
[2] – Enabled

4.2.14 TIE Port Setting

TIE specifies which of the NG²'s serial ports is connected to BHP's TIE data harvesting device. Select the TIE option to change the TIE settings. A prompt like this appears.

```
Select TIE Port:
[1] - Disabled
[2] - COM 2
[3] - COM 4
```

4.2.15 Polling ID Settings

The Data Collection Server (DCS) functions as a central data repository. For BHP, your SmartScanNG system is connected directly to the DCS in a multidrop, polled-mode configuration. The DCS requests train data from the SmartScanNG site and then stores this data for presentation and archival purposes.

All SmartScanNG systems monitor COM5 for polling activity. Every SmartScanNG system sees every message being broadcast by the DCS. However, only the SmartScanNG system with the proper polling address is allowed to respond to the polling message.

To set or change your SmartScanNG² system's polling address:

1 Be sure that the Setup menu is displayed.

The Setup menu looks like this.

```
                    .
                    .
                    .

  [L] - Network Settings
  [M] - Velocity ................. Enabled
  [N] - TIE ..................... Disabled
  [O] - Polling ID .................. 128
  [X] – Exit?
```

2 To display the current polling address for this SmartScanNG system, select the Polling ID option.

A prompt like this appears.

```
  Enter new Polling ID (128-255):
```

3 Enter the three-digit value.

If you enter a value less than 128 or greater than 255, a prompt like this appears.

```
  Invalid range specified
  Enter new Polling ID (128-255):
```

If you enter an acceptable value, the Setup menu reappears.

4.3 System Functions Menu

To execute one or more system functions:

1 Be sure that the Main menu is displayed.

The Main menu looks like this.

```
                    :
                    :
                    :
     [I] - Setup
     [J] - Event log
     [K] - System Functions Menu
     [L] - Replay train
     [M] - Security Menu
     [X] – Exit
```

2 Select the System Functions menu.

A menu and prompt like this appear. To access any of the System Functions menu options, type the letter that corresponds to the desired menu option.

```
SmartSCAN NG2, MP/KP:1233.8, Track:West
01/07/2022 13:37:06, 14.7V, 76°F
System Functions Menu
----------------------------------------
[A] - Radio Test
[B] - Vocabulary Test
[C] - Radio Inhibit
[D] - Start Manual Train
[E] - 1KHz Test Tone
[F] - Auto-Calibration
[G] - Reboot System
[H] - Delete All Stored Train Data
[I] - Clear Event Log
[J] - Update Menu
[K] - Maintenance Menu
[L] - Volume Up (3)
[M] - Volume Down (3)
[N] - Resistor Baseline Data
[O] - Radio Programming Menu
[P] - Scanner Test
[Q] - Calibrate Frauscher Transducers
[R] - Virtual Gate Test
[X] - Exi
```

If a train is at the site when the System Functions menu is generated, "***** Train Is Present *****" is displayed just above the menu header for the System Functions menu. During that time, if you select any item on the System Functions menu, you will be prompted with "**Train Is Present. Continue?**" You must type **Y** to continue. Note that most items on the Systems Functions menu should <u>not</u> be performed while a train is present at the site.

3 To leave the System Functions menu and return to the Main menu:

a Type **X**.
The Main menu reappears.

b Skip the remaining steps.

4 To execute the **radio test**:

The Radio Test option is used to broadcast a short message through the speaker and through the radio. Using this option lets you verify that the speaker and radio are working properly.

At single-track sites, the text of the message is "Testing, Detector at Kilometerpost, (*Kilometerpost number*), testing, one, two, three, four, five, four, three, two, one, testing." At double-track sites, the text of the message is "Testing, Detector at Kilometerpost, (*Kilometerpost number*), track (*track designation*), testing, one, two, three, four, five, four, three, two, one, testing."

```
System Functions Menu
----------------------------------------
[A] - Radio Test
[B] - Vocabulary Test
[C] - Radio Inhibit
            .
            .
            .
```

a Select **Radio Test** from the System Functions menu.

If the system isn't currently making any other voice announcements, it begins the Radio Test announcement. After the announcement finishes, the System Functions menu reappears.

If the system is currently making a voice announcement, the firmware displays the message "System Is Currently Making Voice Announcements! Try Again Later" and redisplays the System Functions menu.

b While listening to the message, look at the PTT LED on the display panel.

The **PTT LED** should be lit.

If this LED isn't lit, the system's ability to send a message to the radio might be inhibited by the Radio Inhibit option on the System Functions menu. If the radio is inhibited, the results of this check are invalid.

c Return to step **3**.

5 To execute the **vocabulary test**:

The Vocabulary Test option is used to enunciate all stored speech phrases. First, all words and phrases will be broadcast in English and then in French. This announcement is broadcast through the speaker but not through the radio. Therefore, it isn't affected by the Radio Inhibit option being enabled.

When this option is selected, the following prompt will be displayed

```
The Vocabulary Test may take several minutes to complete.
Are you sure? (y/n)
```

Press ‘Y’ in response to the above prompt to run the vocabulary test.

In English, the text of the message will be similar to “0, 1, 2, 3, 4, 5, 6, 7, 8, 9, A, And, Axle, Axles, B, <BEEP>, Beginning, Box, C, Car, D, Defect, Defects, Degrees, Detected, Detector, Dragging, E, East, Eighth, End, Equipment, F, Failure, Fifth, First, Fourth, From, G, H, Head, High, Hot, Hour, I, ID, In, Integrity, J, Journal, K, L, Left, Length, Load, M, Malfunction, Milepost, Miles, Minus, Minutes, Multiple, N, Near, Ninth, No, North, Number, O, Of, Off, On, Out, P, Per, Point, Power, Q, R, Rail, Rebroadcast, Resistor, Right, S, Scanner, Second, Seventh, Side, Sixth, Sliding, Slow, South, Speed, Stop, T, Temperature, Test, Testing, Third, To, Too, Total, Track, Train, U, V, W, West, Wheel, Wide, Working, X, Y, Your, Z, <TONE> <TONE>”

```
System Functions Menu
----------------------------------------
[A] - Radio Test
[B] - Vocabulary Test
[C] - Radio Inhibit
            •
            •
            •
```

a Select **Vocabulary Test** from the System Functions menu.

If the system isn't currently making any other voice announcements, it begins the Vocabulary Test announcement. After the announcement finishes, the System Functions menu reappears.

If the system is currently making a voice announcement, the firmware displays the "System Is Currently Making Voice Announcements! Try Again Later" message, and the System Functions menu reappears.

b Return to step **3**.

6 To execute the **radio inhibit**:

The Radio Inhibit option is used to prevent radio activation for three minutes. During this time, any announcements generated by the system are broadcast through the speaker but not through the radio. This feature may be overridden by recalling this submenu and then typing **N**.

```
System Functions Menu
----------------------------------------
[A] - Radio Test
[B] - Vocabulary Test
[C] - Radio Inhibit
            •
            •
            •
```

a Select **Radio Inhibit** from the System Functions menu.

This prompt appears.

```
PTT disabled for 3 minutes
```

b Select Re-enable radio PTT to disable Radio Inhibit.

```
System Functions Menu
----------------------------------------
[A] - Radio Test
[B] - Vocabulary Test
[C] - Re-enable radio PTT
            •
            •
            •
```

c Return to step **3**.

7 To initiate the **Start Manual Train** function:

In Manual Train Mode, the system opens all the shutters and simulates transducer pulses for about one minute. During this time, a person can check various aspects of the installed components. In this mode, the system runs the ramp function without generating heats. The train is marked as a test train. There won't be any voltage applied to the scanner inputs.

This is a timed test that should gate approximately 164 simulated axles. You can stop this test by selecting the Stop Manual Train option.

The data generated for this test train is stored in the Test Train directory, which contains data on the last test train only. The Last Test Train report gets its data from this directory.

```
System Functions Menu
----------------------------------------
[A] - Radio Test
[B] - Vocabulary Test
[C] - Radio Inhibit
[D] - Start Manual Train
[E] - 1KHz Test Tone
            •
            •
            •
```

a Select **Start Manual Train** from the System Functions menu.

This prompt appears.

```
Train Arrival
```

There will be an arrival message broadcast through the speaker only. During the test train, the TO1 & TO2 LEDs on the Display Panel will flash with each simulated axle.

After about a minute, this prompt appears, and the post-train announcements will be broadcast over the speaker.

```
Train Departure
```

b Return to step **3**.

8 To generate the **1KHz test tone**:

The 1KHz Test Tone option is used to generate a continuous 1KHz tone for about 5 seconds. This test tone is broadcast through the speaker and through the radio.

a Select **1KHz Test Tone** from the System Functions menu.

If the system isn't currently making any other voice announcements, it begins the tone.

If the system is currently making a voice announcement, the firmware displays the message "System Is Currently Making Voice Announcements! Try Again Later" and redisplays the System Functions menu.

b While listening to the tone, look at the PTT LEDs on the display panel.

The **PTT LED** should be lit.

If this LED isn't lit, the system's ability to send a tone to the radio might be inhibited by the Radio Inhibit option on the System Functions menu. If the radio is inhibited, the results of this check are invalid.

c Return to step **3**.

9 To start **Auto-Calibration**:

The SmartScanNG² system self-calibrates its pyrometer interface circuitry. You need only put a preheated calibrated heat source on a scanner and place the system in autocalibration mode by using the Auto-Calibration option. The system then scans all pyrometer inputs until the signal from the calibrated heat source is located. The necessary adjustments to the related interface circuitry are automatically made while the system monitors its own progress by analyzing changes in the heat signals. Once the procedure has been completed, autocalibration mode is disengaged, and the calibration results are displayed on your computer. For more details, see ***Appendix E & F - Calibration of Type II/Type III Scanners***.

a Place a preheated calibrated heat source on the scanner to be calibrated.

b Select **Auto-Calibration** from the System Functions menu.

The SmartScanNG² system will now calibrate the channel associated with the scanner on which the heat source has been placed. Follow along on your interface screen until you see "Auto-Calibration Disengaged." This message is an indication that the system is done with the calibration procedure. To abort the process, press **[Esc]** (on your computer) or remove the heat source (from the scanner).

c When "Auto-Calibration Disengaged" is displayed on your computer, remove the calibrated heat source.

Upon completion of autocalibration, the system acquires the scanner resistor temperature baseline values. The process begins with a 20-minute wait period in which the resistors are allowed to cool down. The system counts down during this period, sounding a tone each minute. After the 20-minute cooldown period, the system opens and closes the shutters for a period of 8 minutes.

d Return to step **3**.

10 To force a **system reset**:

The Remote System Reset option allows you to force a system reset through a remote connection. It can also be used locally.

a Select **Remote System RESET** from the System Functions menu.

This prompt appears.

```
Remote System RESET
Are you sure? (y/n)
```

b To not reset the system:

- Type **N**.

  The System Functions menu reappears.

- Return to step **3**.

c To reset the system, type **Y**.

This message appears.

```
Restarting in 2 seconds
Waiting 2sec to start 'A' to abort
Configured IP = 0.0.0.0
Configured Mask = 0.0.0.0
MAC Address= 00:03:f4:08:8c:fe

Comm is booting...
Starting telnet task on port 23... running.


The system has finished booting.
```

After a few seconds, the Main menu reappears.

d Return to step **3**.

11 To **delete all stored train data**:

The Delete All Stored Train Data option allows you to erase all stored train data. This encompasses all data on the trains in the Trains directory, Exceptions directory, and Test Train directory. After deleting all the train data, there isn't any way of regenerating it. The data is gone forever.

```
            •
            •
[G] - Reboot System
[H] - Delete All Stored Train Data
[I] - Clear Event Log
[K] - Update Menu
            •
            •
            •
```

a Select **Delete All Stored Train Data** from the System Functions menu.

This prompt appears.

```
Are you sure? (y/n)
```

b To not delete all stored train data:

- Type **N**.

  The System Functions menu reappears.

- Return to step **3**.

c To delete all stored train data, type **Y**.

This message appears.

```
Train data cleared.
```

d Return to step **3**.

12 To **delete all events** stored in the Event Log:

The Clear Event Log option is used to erase all events stored in the Event Log and displayed on the Event Log report. After deleting the log, there isn't any way of regenerating it. The data is gone forever.

```
            .
            .
            .
[G] - Reboot System
[H] - Delete All Stored Train Data
[I] - Clear Event Log
[K] - Update Menu
            .
            .
            .
```

a Select **Clear Event Log** from the System Functions menu.

This prompt appears.

```
Are you sure? (y/n)
```

b To not delete all events stored in the Event Log:

- Type **N**.

  The System Functions menu reappears.

- Return to step **3**.

c To delete all events stored in the Event Log, type **Y**.

The System Functions menu reappears.

d Return to step **3**.

13 **Update Menu**:

```
            .
            .
            .
[G] - Reboot System
[H] - Delete All Stored Train Data
[I] - Clear Event Log
[K] - Update Menu
            .
            .
            .
```

a Select **Update Menu** from the System Functions menu.

This prompt appears.

```
Update Menu
----------------------------------------
[A] - Select Update File
[X] - Exit
```

b Choose the **Select Update File** from the Update Functions menu.

This prompt appears.

```
Select update file:

[A] – EX 01-00.ng
[B] – EX 01-01.ng
```

d Select appropriate file from menu options.

14 To view **the** maintenance menu:

```
            .
            .
            .
[L] - Maintenance Menu
[M] - Volume up (3)
[N] - Volume down (3)
[O] - Web security settings
[X] – Exit
```

Select the **Maintenance Menu** from the System Functions menu.

A prompt like this appears.

```
Maintenance Menu
----------------------------------------
[A] - View maintenance statistics
[B] - Reset System Health
[C] - Maintenance email list
[X] – Exit
```

15 To view maintenance statistics:

Select the **View Maintenance Statistics** option from the maintenance menu.

Information like this is displayed.

```
-------------------------------------------------------------------------------
STATISTICS                                Trains Evaluated: 40   Days Spanned: 3

                                     Cold     Cold
                      Resistor  Avg  Scanner  Resistor                Amb
Scanner     Max Avg   Max  Avg   CF  cnt   %  cnt   %          Batt  Temp
-----------------------------------------------------    ----------------
East  Brng   74  24  300  300    0    0   0    0   0     Avg  27.8   +75
West  Brng   67  24  300  295    0    0   0    0   0     Max  28.0   +88
                                                         Min  27.8   +66

.....................................................................
Transducer Data
-----------------------------------
Total Axles Scanned.......... 11988
Total Txd. Miscounts.........    0
Percent Miscounts........... 0.00%
Trains With Miscounts........    0
Trains In Sample.............   40
Percent Trains W/ Miscounts.. 0.00%
-------------------------------------------------------------------------------

Hardware Status
.............................................................................
East Bearing Scanner............Pass
West Bearing Scanner............Pass
East Wheel Scanner..............Disabled
West Wheel Scanner..............Disabled
Gating Transducers..............Pass
Ambient Temperature Probe.......Pass
Power...........................Pass
Presence Hardware...............Disabled
Dragger.........................Pass
High Load Detector..............Disabled
Wide Load Detector..............Disabled
AEI Subsystem...................Pass
```

16 To reset system health:

```
Maintenance Menu
----------------------------------------
[A] - View maintenance statistics
[B] - Reset System Health
[C] - Maintenance email list
[X] - Exit
```

a Select **Reset System Health** from the Maintenance menu.

A prompt like this appears.

```
Are you sure? (y/n)
```

b To not reset system health:

- Type **N**.

  The Maintenance Menu reappears.

c To reset system health, type **Y**. This prompt appears.

```
System health cleared
```

The Maintenance Menu reappears.

17 To access **Maintenance email list**:

```
Maintenance Menu
----------------------------------------
[A] - View maintenance statistics
[B] - Reset System Health
[C] - Maintenance email list
[X] - Exit
```

a Select **Maintenance email list** from the Maintenance menu.

A prompt like this appears.

```
Maintenance email list
----------------------------------------
[A] - user@southern-tech.com
[P] - New email address
[X] - Exit
```

b Select **New email address** to add a new address or select an existing address to edit or delete from the list.

c Type X to return to the Maintenance menu.

18 To adjust speaker volume:

```
            .
            .
            .
[L] - Volume Up (3)
[M] - Volume Down (3)
[N] - Resistor Baseline Data
[O] - Radio Programming Menu
[P] - Scanner Test
[Q] - Calibrate Frauscher Transducers
[R] - Virtual Gate Test
[X] – Exit
```

There are 10 selectable volume levels (0-9). Level-0 is the minimum volume, and Level-9 is the maximum volume. The current volume setting is indicated in parenthesis.

a From the System Functions menu, select **Volume up** to increment the current volume level or **Volume down** to decrement level.

b Return to step **3**.

19 To view **Resistor Baseline Data**:

```
                .
                .
                .
  [N] - Resistor Baseline Data
  [O] - Radio Programming Menu
  [P] - Scanner Test
  [Q] - Calibrate Frauscher Transducers
  [R] - Virtual Gate Test
  [X] – Exit
```

a Select Resistor Baseline Data from the System Functions menu.

Data like this appears.

```
Resistor Data
 ---------------------------------------------------------------------------------------
 VOLTS AMB DATE     TIME  STATUS   30  40  50  60  70  80  90 100 110 120 130    Offset
      140 160 180 200 220 240 260 280 300 320 340 360 380 400 420 440 460 480
 ---------------------------------------------------------------------------------------
 Rail 1 (Type III)
 24.5   36 12/13/20 14:56 VALID   208,238,262,277,282,282,282,282,282,282,282
      282,282,282,282,282,282,282,282,282,282,282,282,282,282,282,282,282,282       18
 Rail 2 (Type III)
 24.5   36 12/13/20 14:56 VALID   200,233,262,277,281,281,281,281,281,281,281
      281,281,281,281,281,281,281,281,281,281,281,281,281,281,281,281,281,281       19
 Wheel 1 (Type III)
 24.5   36 12/13/20 14:56 VALID   220,242,270,277,276,286,293,296,305,309,306
      315,320,326,329,338,340,340,343,348,300,300,300,300,300,300,300,300,300       20
 Wheel 2 (Type III)
 24.5   36 12/13/20 14:56 VALID   200,231,267,281,288,292,306,308,326,326,328
      330,336,342,354,354,361,365,368,366,300,300,300,300,300,300,300,300,300       24
```

For the resistor integrity test that is performed after train passage, there are two methods used to calculate the expected resistor temperature. The baseline resistor integrity test method requires the prerequisite of valid resistor baseline data to be stored in nonvolatile memory. Until the system acquires this data, it applies the interim resistor integrity test method to each train. The resistor data used in the baseline resistor integrity test method appears at the bottom of the System Status report.

Included in the data above is a resistor heat profile of each scanner resistor, which covers a period of 30 to 480 seconds in 10 and 20-second intervals. The differences in resistor heat between the two scanners are due to the cable lengths used in this example. Additional items in the data are the battery voltage measured with the shutters open, the date and time of the data acquisition, and the status of the heat profile data.

In this example, the status of both sets of resistor data is “VALID,” meaning they are being used in the baseline integrity test for each train. There are two other possibilities for status, pending and invalid. If the word “PENDING” appears in the status column, the system is waiting for the resistors to cool before acquiring resistor data or for the battery to charge to 12.5 volts (12V system) or 22.0 volts (24V system). “INVALID” indicates that the system has tried twice and could not acquire valid resistor data. In either case, the system applies the interim integrity test to passing trains, which doesn't require resistor baseline data.

The system acquires the resistor data 20 minutes after the user calibrates the scanners with the autocalibration function. The resistor data acquisition runs unattended. Twenty minutes is the cooling period required to allow the resistors to return to ambient temperature after autocalibration. If a train should interrupt the cooling period, the resistor data acquisition runs 20 minutes after the shutters close following the passage of the train.

During the resistor-cooling period, the system announces through the speaker the following. These announcements aren't broadcast over the radio.

A beep sounds once per minute until two minutes before the resistor test.

At two minutes until the test, "Scanner resistor test beginning in 2 minutes" is voiced.

At one minute until the test, "Scanner resistor test beginning in 1 minute" is voiced.

After the resistor cooling period:

As the test begins, "Testing" is voiced. During this time, the word PENDING appears in the status column of the Resistor Data section.

If the test was successful, "System working" is voiced. The word VALID appears in the status column of the Resistor Data section, signifying that the baseline test applies to each passing train.

If the test wasn't successful, "Scanner resistor test beginning in two-zero minutes" is voiced, meaning that the system will try once more after 20 minutes to acquire an accurate resistor heat profile. During this time, the word PENDING appears in the status column of the Resistor Data section. If the test fails a second time, the word INVALID appears in the same column. The system applies the interim integrity test to each passing train while either PENDING or INVALID appears.

20 To access **Radio Programming Menu**:

On the Systems Functions menu is the Radio Programming Menu. This menu includes submenus that allow you to select active radio channels, program the operating frequencies, adjust audio deviation levels, and select carrier detect levels. Programming is available only for Ritron DTX radios. Radios connected to a Dual Track Interface board cannot be programmed via the NG² Radio Programming Menu.

```
              .
              .
              .
  [O] - Radio Programming Menu
  [P] - Scanner Test
  [Q] - Calibrate Frauscher Transducers
  [R] - Virtual Gate Test
  [X] – Exit
```

Select **Radio Programming Menu** from the System Functions menu.

For Ritron radios, a menu like this appears.

```
Identifying radio type...   ...   ...   .
Reading radio data...   ...   ...   ...   ...   ...   ...   ...

SmartSCAN NG2, MP/KP:0001.2, Track:Single
01/19/2022 13:41:27, 24.5V, 54°F
DTX-160                          Firmware version: 1.05
Radio Programming Menu                Transmit  Receive
-------------------------------------------------------
[A] - Channel 1..................... 160.515   160.515
[B] - Channel 2..................... 160.515   160.515
[C] - Channel 3..................... 161.565   160.395
[D] - Channel 4..................... 160.440   160.440
[E] - Channel 5..................... 160.440   160.440
[F] - Channel 6..................... 160.440   160.440
[G] - Channel 7..................... 160.440   160.440
[H] - Channel 8..................... 160.440   160.440
[I] - Carrier Detect On/Off (-dBm) ...... 110.0 / 115.0
[J] - Current channel ............................. 1
[X] - Exit
```

Note: Radio menu cannot be accessed unless a Ritron DTX radio is plugged into the internal radio connector.

Radio Frequency Setup

The transmit and receive frequencies can be programmed for each of the eight available channels. Select the channel number to change its frequency designations. A prompt like this will appear.

```
            Transmit  Receive
            --------  -------
Channel 1 - 160.515   160.515

Enter new transmit frequency (###.###): 160.515
Enter new receive frequency (###.###): 160.515

Radio will not be programmed until you leave the menu and save
settings.
Enter new receive frequency (###.###):
```

Input format **###.###** where '#' may be 0-9. Include leading and trailing zeros. These values must be between 160.215 and 161.565. Once you have made your changes, you must exit the radio menu and the equipment menu and save the settings. The radio will then begin programming the new frequencies. If you attempt to enter the Radio Frequency Menu when the radio is not plugged in or is not responding, you will receive the message "Radio channels not available, radio not responding." You can also check to see if the Radio is not responding by looking at the System Status Report under System Warnings. After booting up, the system takes about a minute to recognize the radio.

Carrier Detect On/Off Level

The CD (Carrier Detect) LED is an indication that the system is experiencing radio traffic. It operates similarly to squelch. If the CD LED is lit when there is no activity on the frequency, then it is recommended that the sensitivity be reduced by changing the Carrier Detect On and Off levels. The factory default settings are 110 -dBm for carrier detect on and 105 -dBm for carrier detect off. These settings rarely need to be adjusted and should be done so only by a qualified radio technician. For proper operation, the carrier detect on value should always be higher than the carrier detect off value. The difference between the two values represents the squelch hysteresis and is used to prevent squelch chatter when the received signal is near the squelch setting values. Typical hysteresis should be 5 dB.

Select **Carrier Detect ON/OFF,** and a prompt like this will appear.

```
The default value for Carrier Detect On is 110.0 (-dBm)
Enter new Carrier Detect On (-dBm) value between 060.0 and 127.0
(###.#):
```

Select **Current Channel** to activate the desired channel, and a prompt like this will appear.

```
Select a channel:
[A] - Channel 1
[B] - Channel 2
[C] - Channel 3
[D] - Channel 4
[E] - Channel 5
[F] - Channel 6
[G] - Channel 7
[H] - Channel 8
[I] - Hardware control
```

21 To initiate the **Scanner Test**:

```
            .
            .
            .
 [P] - Scanner Test
 [Q] - Calibrate Frauscher Transducers
 [R] - Virtual Gate Test
 [X] - Exit
```

The scanner test function allows you to verify scanner accuracy. Place a calibrated heat source over a scanner's aperture and initiate the test. The detector will scan and display the temperature.

Select Scanner Test from the System Functions menu.

Test results like these appear.

```
East rail bearing scanner pot: 75
West rail bearing scanner pot: 72

The test will time out after 10 minutes
You can end the test early by pressing any key.

Beginning test...

East bearing   West bearing
     180             3
```

22 To perform a **Calibrate Frauscher Transducers**:

```
            .
            .
            .
[P] - Scanner test
[Q] - Calibrate Frauscher Transducers
[R] - Virtual gate test
[X] - Exit
```

a Select **Calibrate Frauscher Transducers** from the System Functions menu.

If Frauscher transducers are **not** currently installed and selected for the “Transducer Type” option on the Setup / Equipment Menu, then this message will be displayed, and then the System Functions Menu will be redisplayed.

```
 ***Aborting Calibration***  Frauscher transducers are not
currently enabled in the detector's Setup.
```

If Frauscher transducers are currently installed and selected for the “Transducer Type” option on the Setup / Equipment Menu, then a prompt like this appears.

```
Which transducer?
[A] - Transducer 1
[B] - Transducer 2
[C] - Both
```

Select a transducer (or both) to initiate calibration.

```
Are you sure? (y/n)

Sending calibration signal...
Calibration started, please wait up to 60 seconds...
Calibration complete
Transducer 1: Success
```

b Type any key to return to the System Functions menu.

c Return to step **3**.

23 To perform a **Virtual gate test**:

```
            .
            .
            .
[P] - Scanner test
[Q] - Calibrate Frauscher Transducers
[R] - Virtual gate test
[X] - Exit
```

a Select **Virtual gate test** from the System Functions menu.

A prompt like this appears.

```
Select a scanner:
[1] - East Rail
[2] - West Rail
[3] - East Wheel
[4] - West Wheel
```

Select a scanner to initiate the test.

```
Are you sure? (y/n)

You have 2 minutes to test.
Test running, press any key to abort the test...
```

While in Virtual Gate Test Mode, the goal is to simulate a wheel that passes over the gating transducers and then continues moving to the scanner under test. The system notifies you when the simulated wheel is in the virtual gate area by cycling the shutters. The following steps describe how to use the Virtual Gate Test Mode.

- From the Virtual Gate Test Mode menu, select a scanner in which you want to see its Virtual Gate position.
- Swipe across the Gating Transducers with a metal object in the direction of the scanner under test. Maintain a speed faster than 1.6 seconds between sensors.
- Swipe across the sensors again. However, this time continue moving the metal object to the scanner under test while maintaining a constant speed.
- The shutters rapidly cycle one time to indicate when the system is looking for heat in the virtual window located at the scanner, which should be at the time that the metal object (simulated axle) passes the scanner. *If the shutters do not cycle, the entry for the closest transducer (TO1 or TO2) may be incorrect.*
- Simulating various axle speeds, repeat as needed to confirm settings.

The test mode runs for two minutes before timing out. Otherwise, any keypress ends the session. Rapid shutter flutter is an indication that two minutes have expired and the test has ended automatically. The event log records a canceled train at the end of the testing session.

b Type any key to return to the System Functions menu.

4.4 Replay EOT Announcement

The EOT message for every train that is stored in long-term memory can be replayed through the local speaker. The replaying of the EOT message does not activate the PTT, so it isn't broadcast over the radio.

To replay the train announcement for a given train:

1 Be sure that the Main menu is displayed.

The Main menu looks like this.

```
SmartSCAN NG2
01/10/2022 16:26:42 EST
Main Menu - Comm
----------------------------
[A] - Train Summary
[B] - Train Detail
[C] - Exception Summary
[D] - Exception Detail
[E] - System Status Report
[F] - Last Train
[G] - Train DSRs
[H] - AEI Diagnostic
[I] - Setup
[J] - Event log
[K] - System Functions Menu
[L] - Replay train
[M] - Security Menu
[X] – Exit
```

2 Select **Replay train**.

This prompt appears.

```
Enter train number:
```

3 Type the train number.

4 The following prompt will be displayed.

```
Exception train? (y/n)
```

If the train number you entered was taken from the Exception Summary Report, then press ‘Y’ to the above prompt. Otherwise, press “N”.

5 The following prompt will be displayed.

```
Text only? (y/n)
```

If you want only a text version of the End Of Train message to be printed to the terminal, press ‘Y’ in response to the above prompt. If you’d also like to hear the message broadcast audibly, then press ‘N’ in response to the above prompt.

If you answered ‘N’ to the above prompt, then the End Of Train message will be broadcast audibly, and a text form of the message will be printed to the terminal. The text form will look similar to this:

```
Announced: ' detector at  kilometer post  1  2  3  3  point  8
west track  '
Announced: ' detector at  kilometer post  1  2  3  3  point  8
west track  no defects  repeat  no defects  total axles  2  6  '
Announced: ' detector at  kilometer post  1  2  3  3  point  8
west track  no defects  repeat  no defects  total axles  2  6
detector out  '
```

4.5 System Security

This menu is only available during the initial setup or when logged in with an administrative password.
To view or change system security settings:

Be sure that the Main menu is displayed.

The Main menu looks like this.

```
SmartSCAN NG2
01/10/2022 16:26:42 EST
Main Menu - Comm
----------------------------
[A] - Train Summary
[B] - Train Detail
[C] - Exception Summary
[D] - Exception Detail
[E] - System Status Report
[F] - Last Train
[G] - Train DSRs
[H] - AEI Diagnostic
[I] - Setup
[J] - Event log
[K] - System Functions Menu
[L] - Replay train
[M] - Security Menu
[X] – Exit
```

Select the **Security Menu**. This menu/prompt appears.

```
Security Menu
----------------------------------------
[A] - Admin password not set
[B] - User password not set
[C] - Change wifi password
[X] – Exit
```

System login with an administrative password allows all access to system menus.

System login with user password allows access to report menus and system functions menu but restricts access to the setup menu and security menu.

Select an option to set or change the password.

```
  Enter a new password (20 character maximum):
```

5.0 Web/Secure Wireless User Interface

The web/ Secure Wireless interface allows **on-site** and **off-site** access to the system. This interface allows the user to view reports and modify system parameters.

To use the Secure Wireless interface locally, you need:

- A phone, tablet, or computer with WiFi capability
- Communications browser, which is installed on the device

For remote access via a web browser:

- A computer with internet connectivity
- A SmartScanNG² with Ethernet connectivity

The SmartScanNG² web interface provides:

- Train Summary report
- Train Detail reports
- System Status report
- System configuration
- Maintenance Information
- Event Log report
- Software update
- Scanner Calibration

To connect to the SmartScanNG² remotely with a web browser, the controller module must have Ethernet connectivity routed to the RJ45 connector, as shown below.

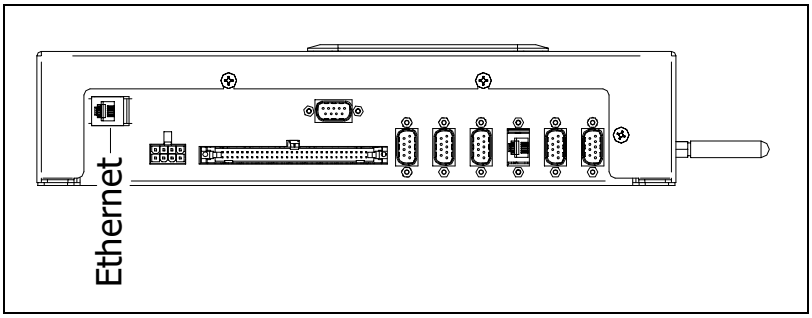

To make a wireless local connection, the WiFi setting must be enabled on the SmartScanNG². Search for and select the NG network on your wireless device. Enter the correct WiFi password to make a successful network connection.

To view the web page for your SmartScanNG², open a web browser on your computer. Enter the unit's IP address into the address bar of your browser. Login with a username and password. See example below. The contents of your web page will be similar.

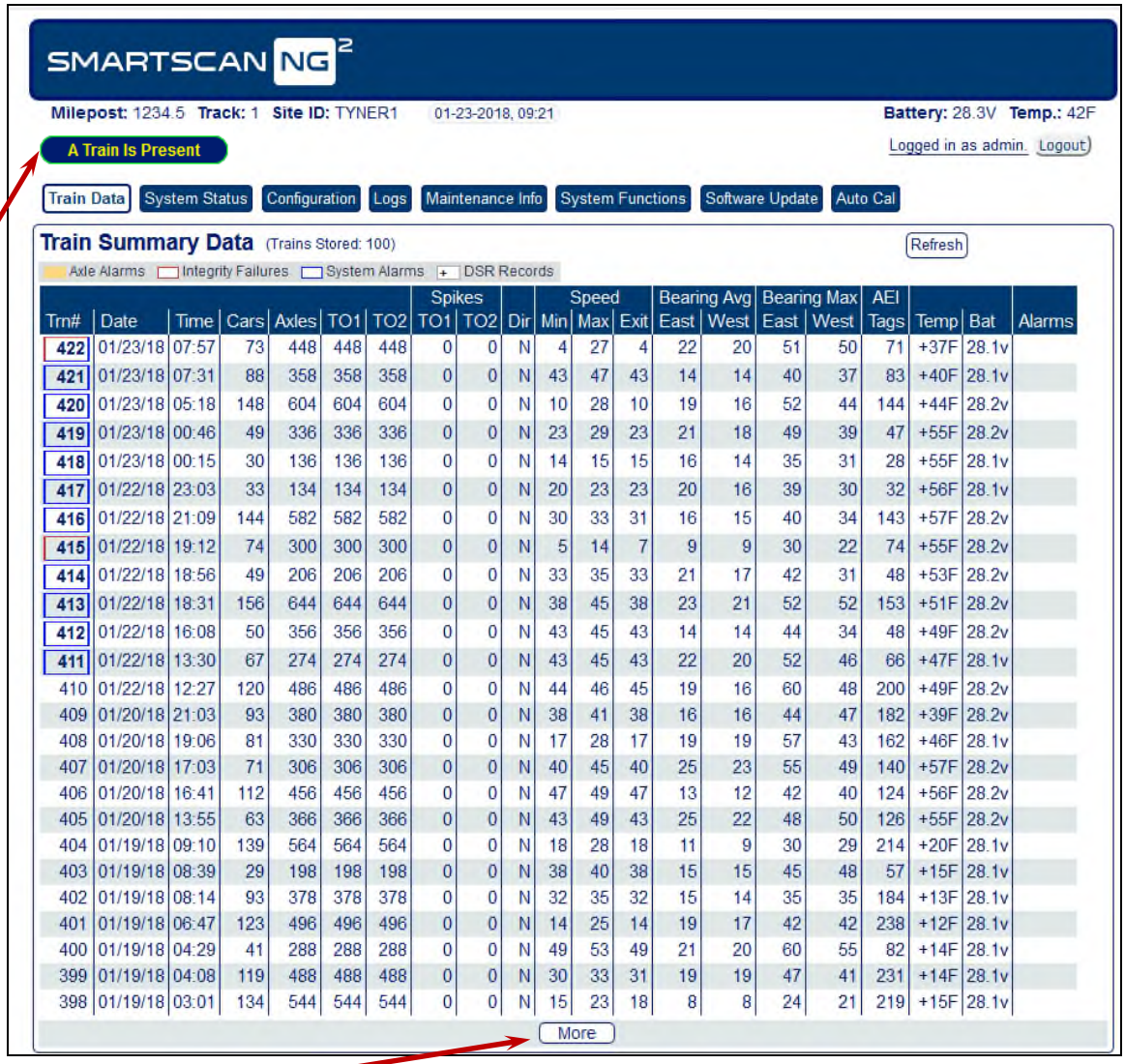

							Spikes			Speed			Bearing Avg		Bearing Max		AEI			
Trn#	Date	Time	Cars	Axles	TO1	TO2	TO1	TO2	Dir	Min	Max	Exit	East	West	East	West	Tags	Temp	Bat	Alarms
422	01/23/18	07:57	73	448	448	448	0	0	N	4	27	4	22	20	51	50	71	+37F	28.1v	
421	01/23/18	07:31	88	358	358	358	0	0	N	43	47	43	14	14	40	37	83	+40F	28.1v	
420	01/23/18	05:18	148	604	604	604	0	0	N	10	28	10	19	16	52	44	144	+44F	28.2v	
419	01/23/18	00:46	49	336	336	336	0	0	N	23	29	23	21	18	49	39	47	+55F	28.2v	
418	01/23/18	00:15	30	136	136	136	0	0	N	14	15	15	16	14	35	31	28	+55F	28.1v	
417	01/22/18	23:03	33	134	134	134	0	0	N	20	23	23	20	16	39	30	32	+56F	28.1v	
416	01/22/18	21:09	144	582	582	582	0	0	N	30	33	31	16	15	40	34	143	+57F	28.2v	
415	01/22/18	19:12	74	300	300	300	0	0	N	5	14	7	9	9	30	22	74	+55F	28.2v	
414	01/22/18	18:56	49	206	206	206	0	0	N	33	35	33	21	17	42	31	48	+53F	28.2v	
413	01/22/18	18:31	156	644	644	644	0	0	N	38	45	38	23	21	52	52	153	+51F	28.2v	
412	01/22/18	16:08	50	356	356	356	0	0	N	43	45	43	14	14	44	34	48	+49F	28.2v	
411	01/22/18	13:30	67	274	274	274	0	0	N	43	45	43	22	20	52	46	66	+47F	28.1v	
410	01/22/18	12:27	120	486	486	486	0	0	N	44	46	45	19	16	60	48	200	+49F	28.2v	
409	01/20/18	21:03	93	380	380	380	0	0	N	38	41	38	16	16	44	47	182	+39F	28.2v	
408	01/20/18	19:06	81	330	330	330	0	0	N	17	28	17	19	19	57	43	162	+46F	28.1v	
407	01/20/18	17:03	71	306	306	306	0	0	N	40	45	40	25	23	55	49	140	+57F	28.2v	
406	01/20/18	16:41	112	456	456	456	0	0	N	47	49	47	13	12	42	40	124	+56F	28.2v	
405	01/20/18	13:55	63	366	366	366	0	0	N	43	49	43	25	22	48	50	126	+55F	28.2v	
404	01/19/18	09:10	139	564	564	564	0	0	N	18	28	18	11	9	30	29	214	+20F	28.1v	
403	01/19/18	08:39	29	198	198	198	0	0	N	38	40	38	15	15	45	48	57	+15F	28.1v	
402	01/19/18	08:14	93	378	378	378	0	0	N	32	35	32	15	14	35	35	184	+13F	28.1v	
401	01/19/18	06:47	123	496	496	496	0	0	N	14	25	14	19	17	42	42	238	+12F	28.1v	
400	01/19/18	04:29	41	288	288	288	0	0	N	49	53	49	21	20	60	55	82	+14F	28.1v	
399	01/19/18	04:08	119	488	488	488	0	0	N	30	33	31	19	19	47	41	231	+14F	28.1v	
398	01/19/18	03:01	134	544	544	544	0	0	N	15	23	18	8	8	24	21	219	+15F	28.1v	

Click the "**More**" button at the bottom to load more train data.

The web page header includes the site's Kilometerpost or Milepost, Track Designator, Site ID, Date, Time, Battery voltage, Temperature, and Login status. The main page includes eight tabs. Train Data, System Status, Configuration, Logs, Maintenance Info, System Functions, Software Update, and Auto Cal. Clicking on the tabs will change the display in the main body of the page.

A pop-up indicator will appear above the tabs whenever a train is present.

On the Train Data tab between the Train Summary Data label and the header for the report columns is a key showing the various indicators present on the report (axle alarms, Integrity Failures, System Alarms, and DSR Records). Certain colors and characters at certain locations around a train's train number indicate the presence of these items. Hovering the mouse pointer over a train number also produces a pop-up window showing any axle alarms, Integrity Failures, and/or System Alarms present on the train.

5.1 Train Data

To view the train data, left-click the **Train Data** tab. The Train Summary Data will be displayed as depicted in the example above.

To view a train detail report, slide the mouse pointer to highlight the row for the desired train in the Train Summary Data Table. Left-click to select the train. A new window appears for each **Train Detail** report. This report also has the Show Announcements and Show DSR Charts buttons that display additional windows and information and provide replay and download of the spoken announcements. See the example below.

Train Details - Train #2 — **Milepost: 1234.5 / North**

Date: 06/11/20	**Axles:** 560	**Speed(kph)**	**Train Length:** 2246m	**Amb. temp.:** +11C
Time: 08:54	**T01:** 560	**Min:** 45	**Shutters Open:** 155 sec	**Battery:** 14.4v
Dir: North	**T02:** 560	**Max:** 62		
	Cars: 138	**Avg:** 54		
		Exit: 45		

Scanner Performance

Scanner	Max	Avg	Resistor Read	Resistor Req		CF
East Bearing	33	12	291	205	B	0
West Bearing	36	16	292	195	B	0
East Wheel	32	15	336	247	B	0
West Wheel	34	20	324	216	B	0

Resistor Test Mode: Enabled

Alarm Limits

Alarm	Limit
Absolute	150
Differential	255
N/E Hot Wheel	500
S/W Hot Wheel	500
Carside Slope	1.31
Carside Min	90
Cold Rail Temp	10
Announce Hot Wheels	Yes

System Alarms

None.

Integrity Failures

None.

Axle Alarm Summary

None.

Show Announcements | Show DSR Charts

		Bearing		Wheel						
Car	Axle	East	West	East	West	ON	OFF	PW1	PW2	Alarms
1	1	0	0	15	18	33	1675	20	22	
	2	0	0	15	12	34	75	19	22	
	3	0	0	15	21	33	82	20	22	
	4	0	0	15	18	34	517	20	22	
	5	2	8	15	18	33	82	20	22	
	6	1	1	15	12	34	75	19	20	
2	7	0	1	32	30	34	191	20	23	
	8	0	1	18	24	34	75	20	22	
	9	0	1	18	29	33	82	22	22	
	10	0	0	15	18	34	518	19	22	
	11	0	3	15	24	34	82	20	22	
	12	1	2	18	26	33	77	20	22	

•
•
•

See Section **6.0 Producing Reports** for a detailed explanation of the various report headers.

5.2 System Status

To view the system status, left-click the **System Status** tab. Grab and drag the slider bar to view the full range of system settings. See the example depicted below. By clicking on the header of a section of the display you can hide/show the contents of that section.

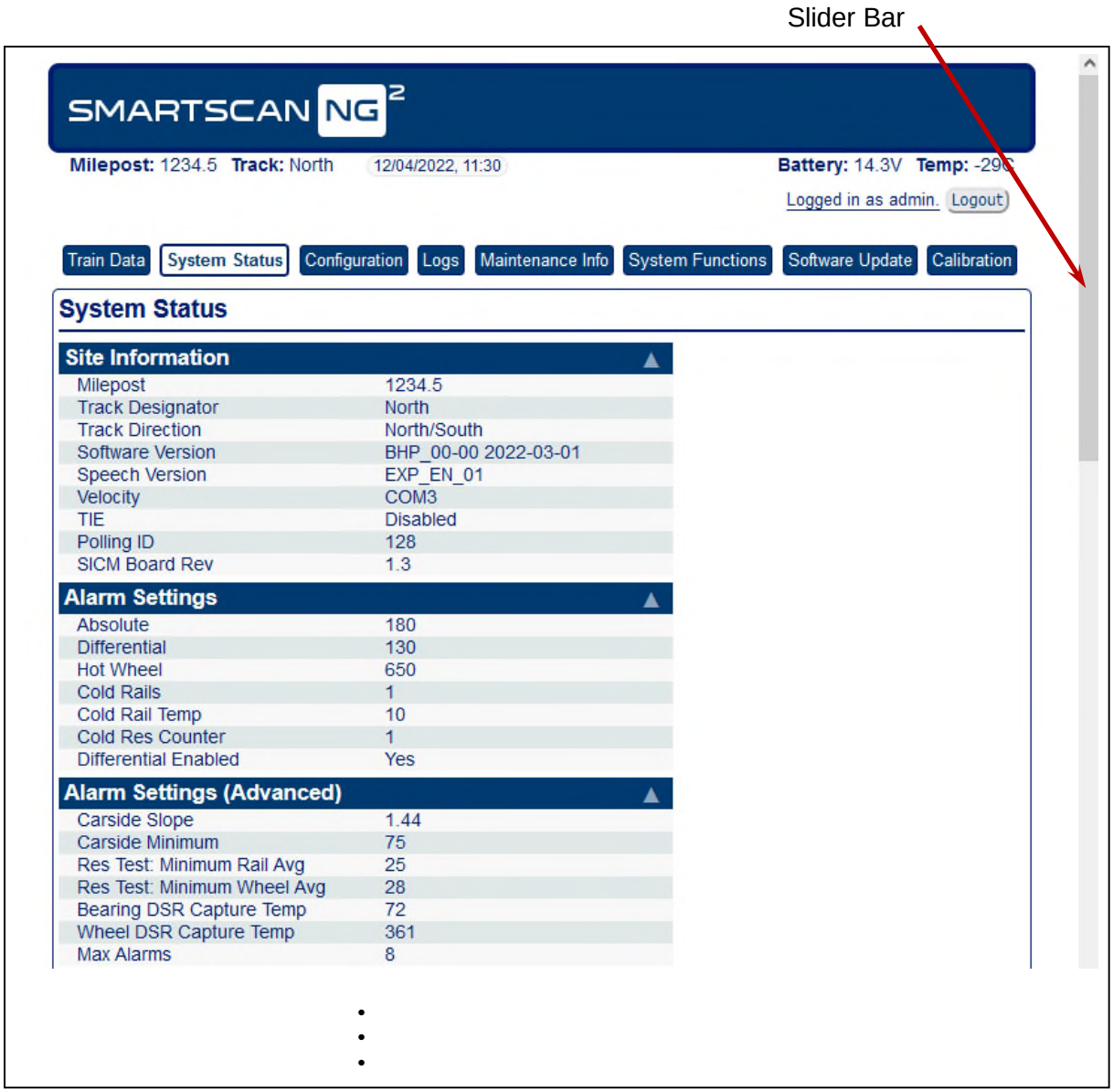

•
•
•

Equipment Settings	
Dragger	Yes
Hot Wheel	Yes
Hot Bearing	Yes
High Load	No
Wide Load	No
AEI	No
Presence Hardware	Yes
Advance Transducers	No
AC Power Off Monitor	Yes

Equipment Settings (Advanced)	
Carside Slope	Yes
Winter Cycle	Disabled
Gate Distance	24.0 in
Dragger Debounce Time	200 ms
Pre Train Dragger Dist	0 ft
Pre Train High/Wide Dist	0 ft
Presence Timeout Period	10 sec
System Voltage	12 V
Resistor Test	Enabled
Clearance Mode	Multiplexed
Clearance Type	Light Beam
Transducer Gain	Normal
Transducer Type	Frauscher
Rail Size	136 (67.46)
East Rail Scanner Offset	23 (TO1)
West Rail Scanner Offset	23 (TO1)
East Wheel Scanner Offset	23 (TO1)
West Wheel Scanner Offset	23 (TO1)
Car Breakout Ratio	1.19

Offset settings will appear only if Frauscher transducer type has been selected.

Message Settings	
Arrival Message	Yes
Customer Name	Yes
Axles	Yes
Speed	No
Temperature	Yes
Slow	Yes
Power Off	Yes
Repeat No Defects	Yes
Length	No
Cars Count	No
Lft/Rt Alarm Ref	No
Car ID With Alarm	No
PrimaryLanguage	French_Louise
SecondaryLanguage	None

Message Settings (Advanced)	
Announce Hot Wheels	Yes
Announce High/Wide	Yes
Request EOT Timer	10 min
Rebroad DTMF Code	123
Num EOT Repeats	1
EOT Repeat Delay	15 sec

•
•
•

System Status (cont.)

•
•
•

Network Settings	
Use Static Address	Yes
Static IP	192.168.1.201
Static Mask	255.255.255.0
Default Gateway	192.168.1.1
DNS Server	192.168.1.1
TELNET Port	23
FTP Port	21
HTTP Port	80
HTTPS Port	8080
Use Wifi	No
Wifi Inactivity Timeout	10 min

Port Settings	
COM1	Baud 19200 NA/NA
COM2	Baud 19200 NA/NA
COM3	Baud 19200 NA/NA
COM4	Baud 19200 NA/NA
COM5	Baud 19200 NA/NA
COM6	Baud 57600 NA/NA
RS485	Baud 9600 NA/NA
Page Lines	30

AEI Settings	
Tag Reader Type	None
ID Separation	2
Consecutive Reads	2
RF Frequency (MHz)	915.000
RF Attenuation (dB)	0
Multi-Track Tag Filter	Disabled

Units Of Measure Settings	
Location	Kilometerpost
Date Format	Metric
Speed	Metric
Temperature	Metric
Length	Metric

Scanner Calibration Date / Digital Potentiometer Settings	
Rail 1 Type III	29/06/2020 11:42 / 74
Rail 2 Type III	03/09/2020 07:38 / 56
Wheel 1 Type III	01/01/2016 08:44 /100
Wheel 2 Type III	01/01/2016 08:49 /100

Resistor Baseline	
Rail 1 Type III	Valid
Rail 2 Type III	Valid
Wheel 1 Type III	Valid
Wheel 2 Type III	Valid

5.3 Configuration

To view the system configuration settings, left-click the **Configuration** tab. Then left-click the category tabs on the left to view or edit the various parameters. If necessary, grab and drag the slider bar on the right to view the full range of system settings. See the samples depicted below.

To modify the **Date/Time** setting, click on the parameter field and type the new value. The **Apply Changes b**utton will be outlined in red when changes have been entered. Left-click the **Apply Changes** button to save changes. A Changes Applied Successfully message will appear.

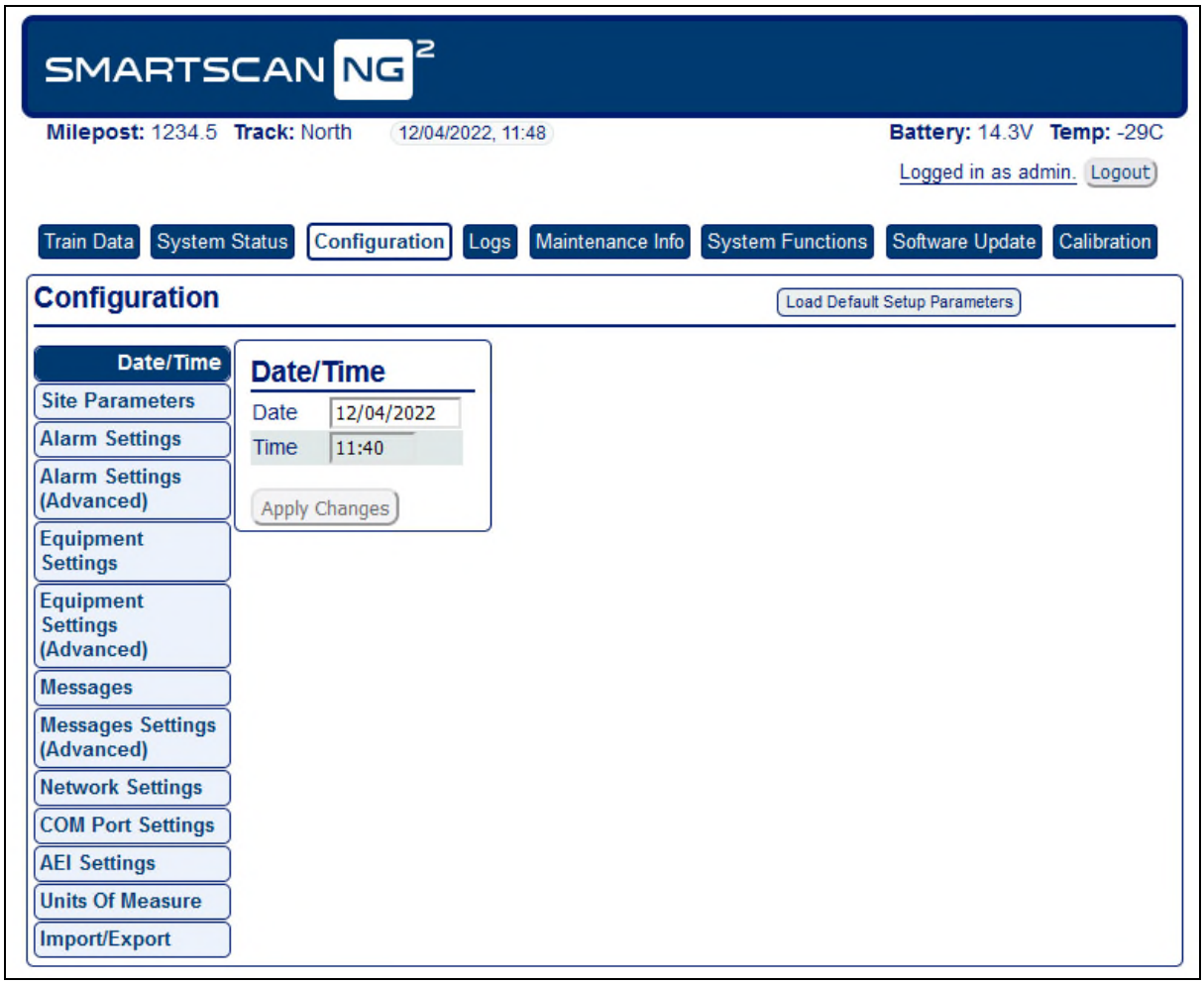

Date/Time

To modify the **Site Parameters** settings, click on the parameter field and type the new value. The **Apply Changes b**utton will be outlined in red when changes have been entered. Left-click the **Apply Changes** button to save changes. A Changes Applied Successfully message will appear.

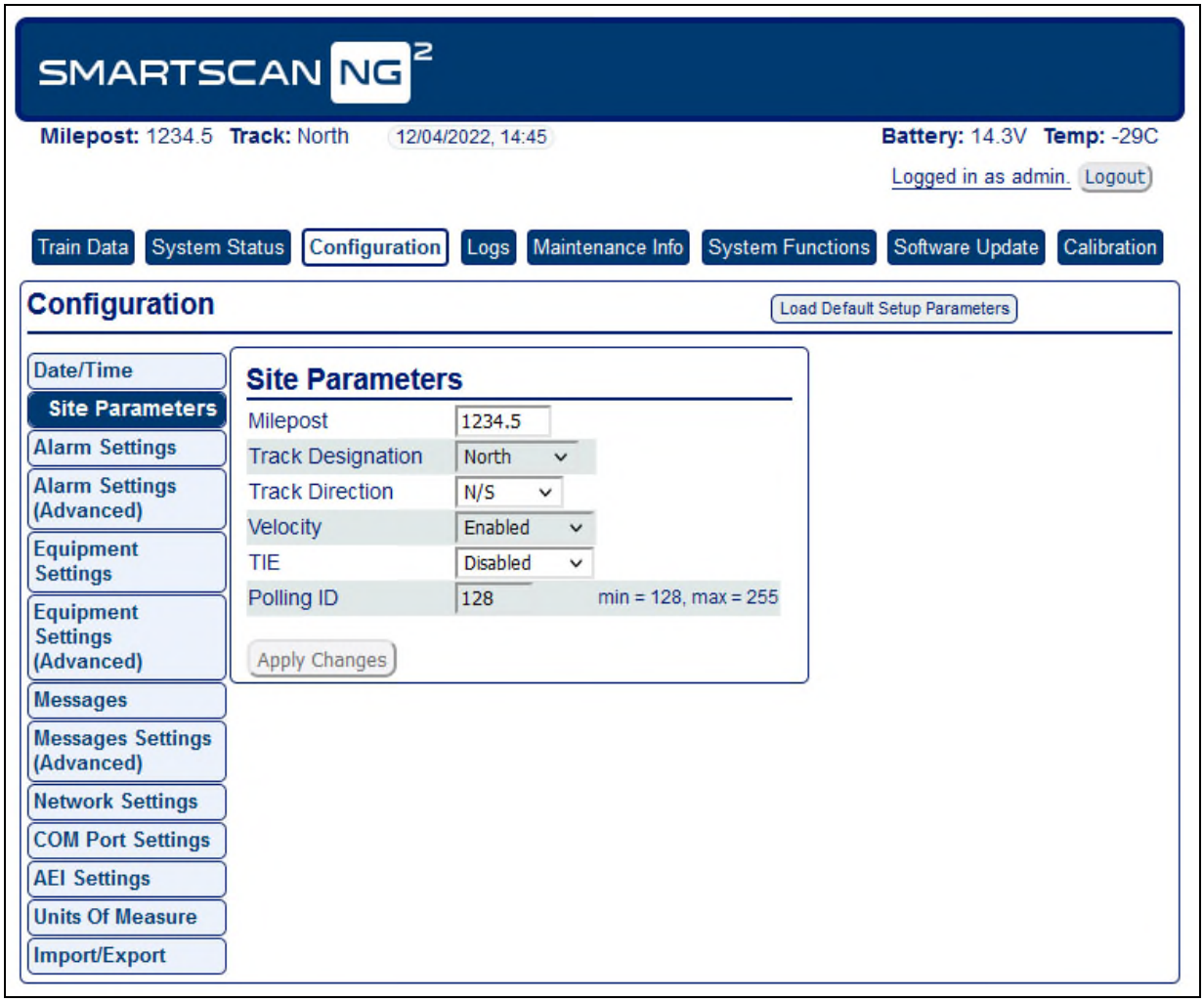

Site Parameters

To modify the **Alarm Settings**, click on the parameter field and type the new value. The **Apply Changes b**utton will be outlined in red when changes have been entered. Left-click the **Apply Changes** button to save changes. A Changes Applied Successfully message will appear.

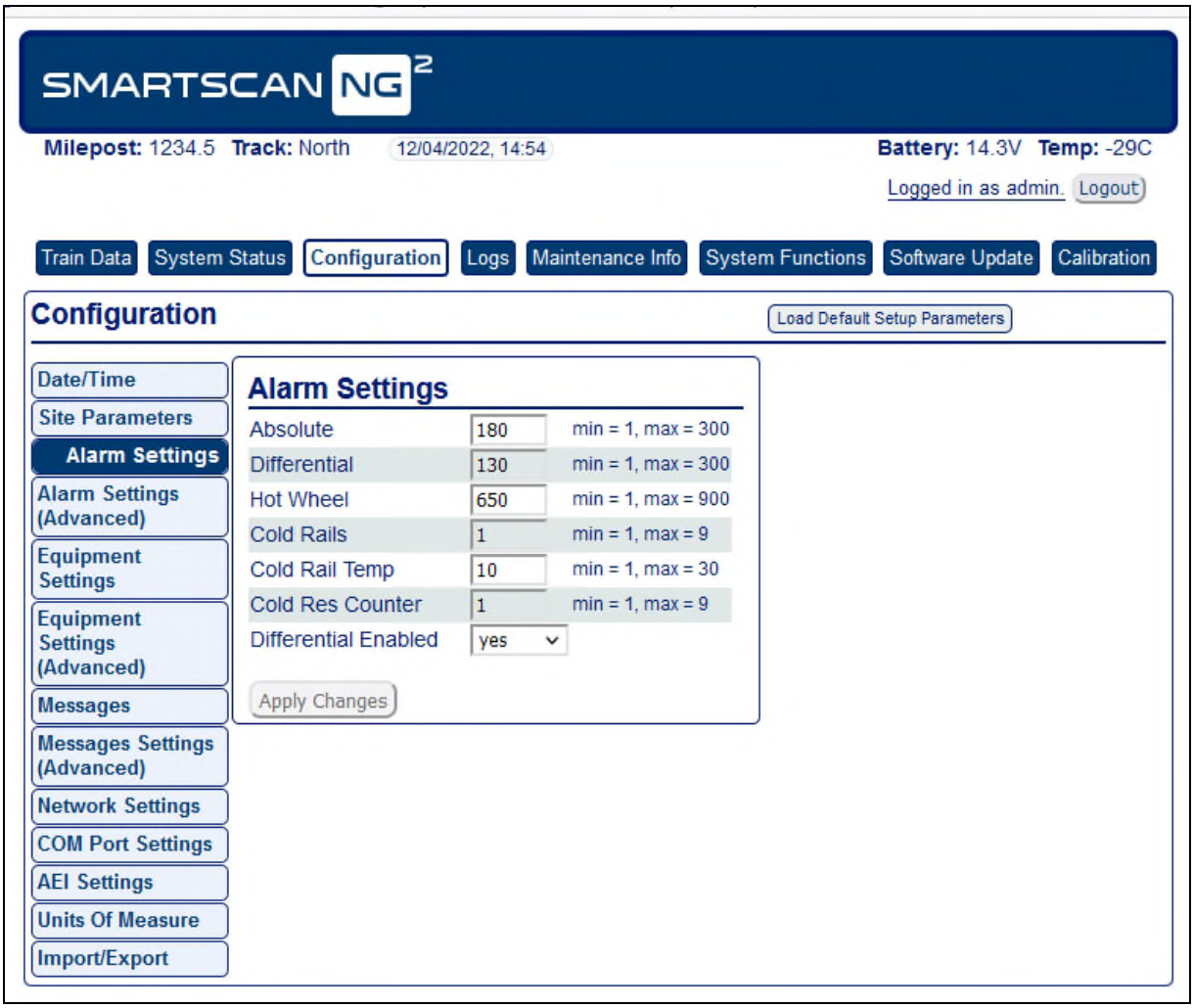

Alarm Settings

To modify the **Alarm Settings (Advanced)** settings, click on the parameter field and type the new value. The **Apply Changes b**utton will be outlined in red when changes have been entered. Left-click the **Apply Changes** button to save changes. A Changes Applied Successfully message will appear.

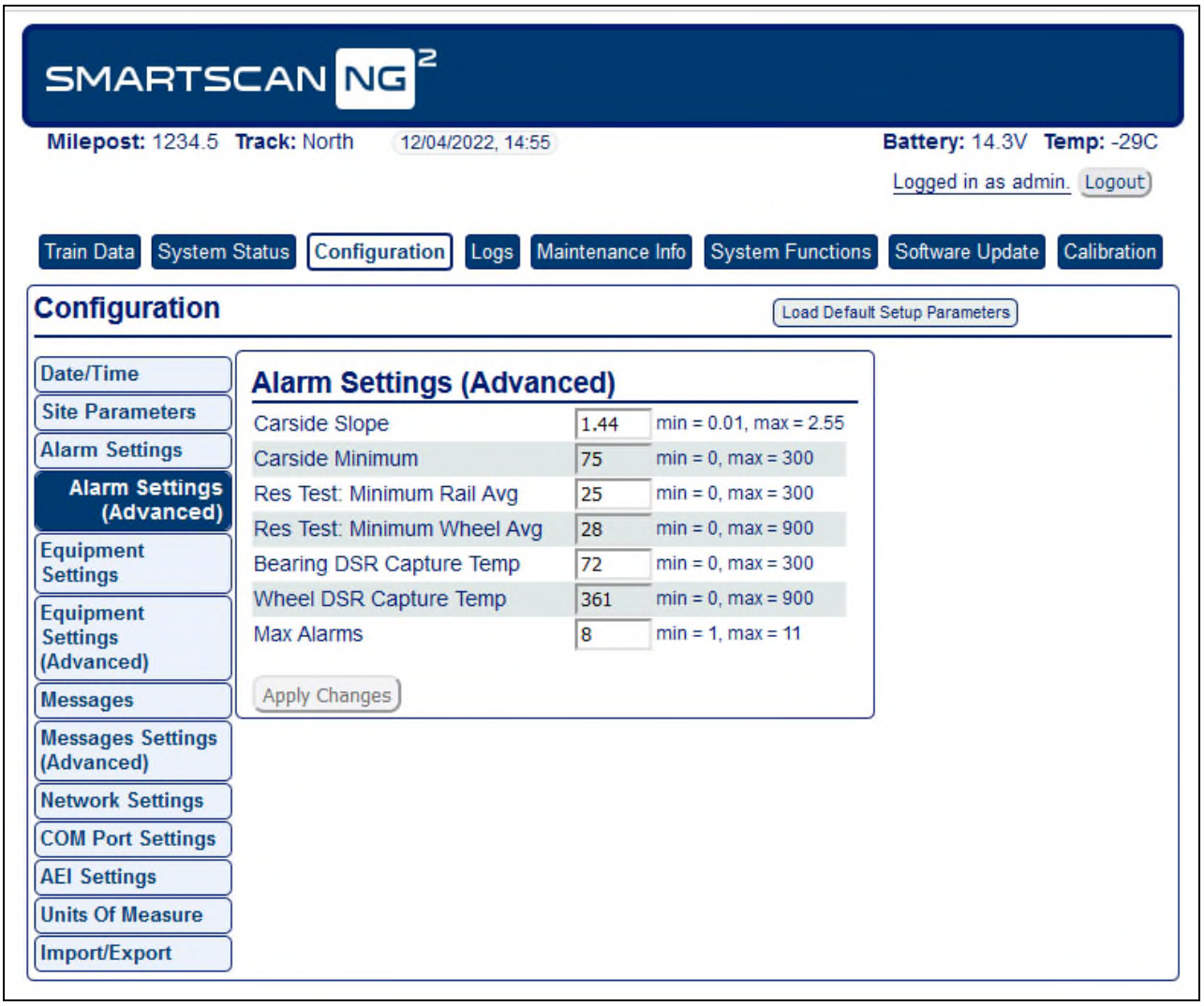

Alarm Settings (Advanced)

To modify the **Equipment Settings**, click on the parameter field and type the new value. The **Apply Changes b**utton will be outlined in red when changes have been entered. Left-click the **Apply Changes** button to save changes. A Changes Applied Successfully message will appear.

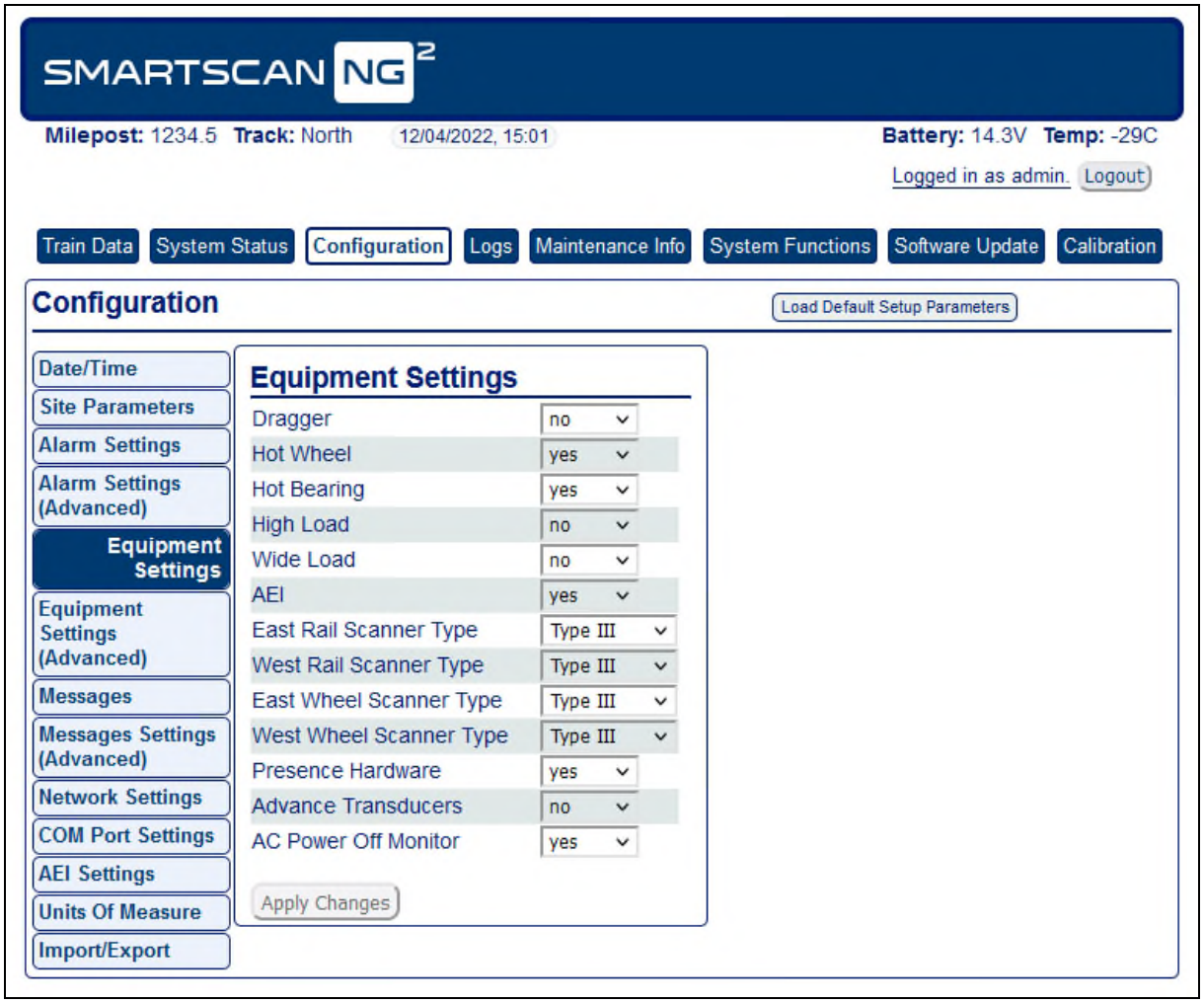

Equipment Settings

To modify the **Equipment Settings (Advanced)** settings, click on the parameter field and type the new value. The **Apply Changes b**utton will be outlined in red when changes have been entered. Left-click the **Apply Changes** button to save changes. A Changes Applied Successfully message will appear.

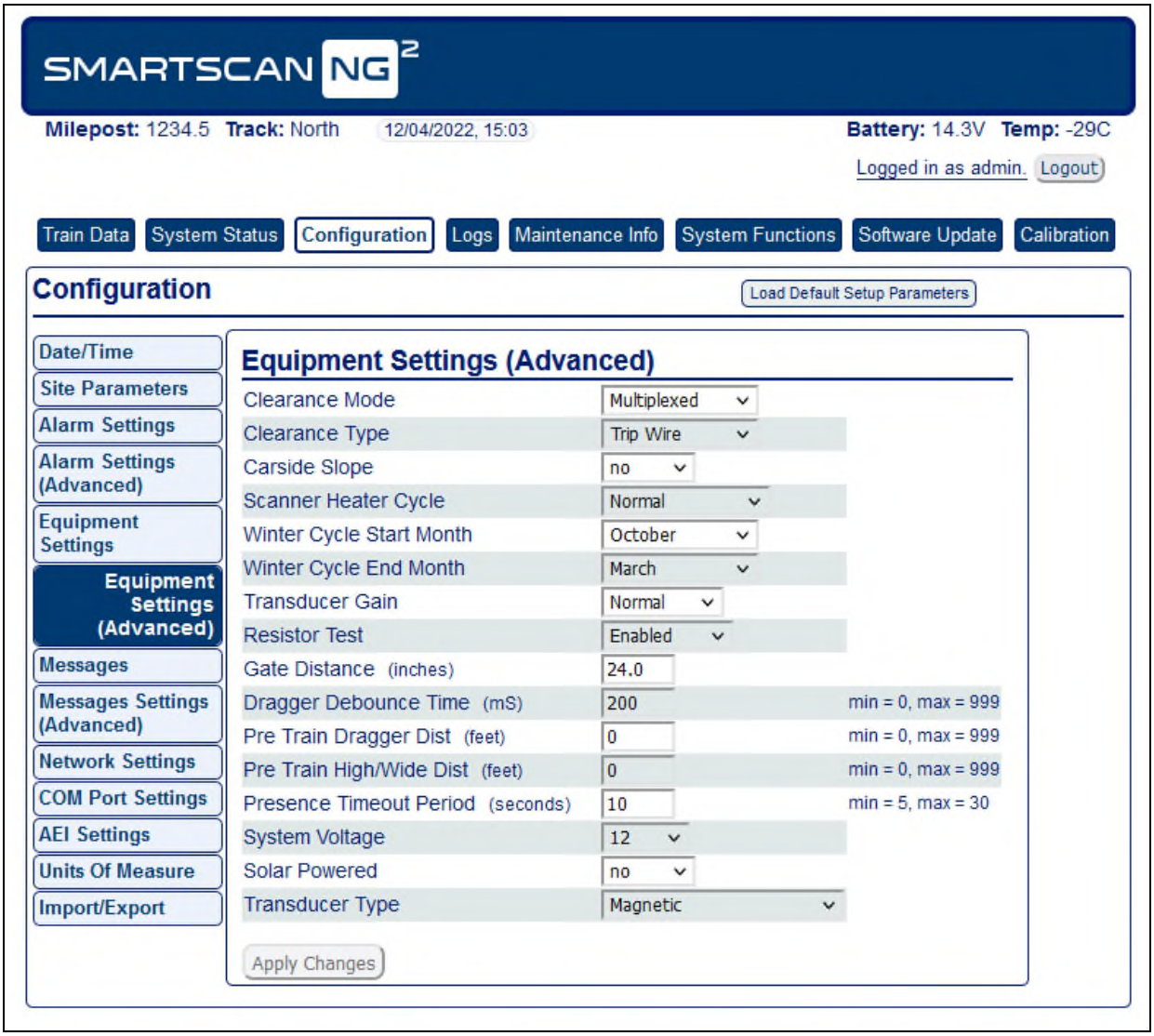

Equipment Settings (Advanced)

To modify the **Frauscher Transducer** settings, click on the parameter field and type the new value. The **Apply Changes b**utton will be outlined in red when changes have been entered. Left-click the **Apply Changes** button to save changes. A Changes Applied Successfully message will appear.

> **NOTE:** This menu will only appear if the transducer type is set to “Frauscher” in the Equipment Settings (Advanced) menu.

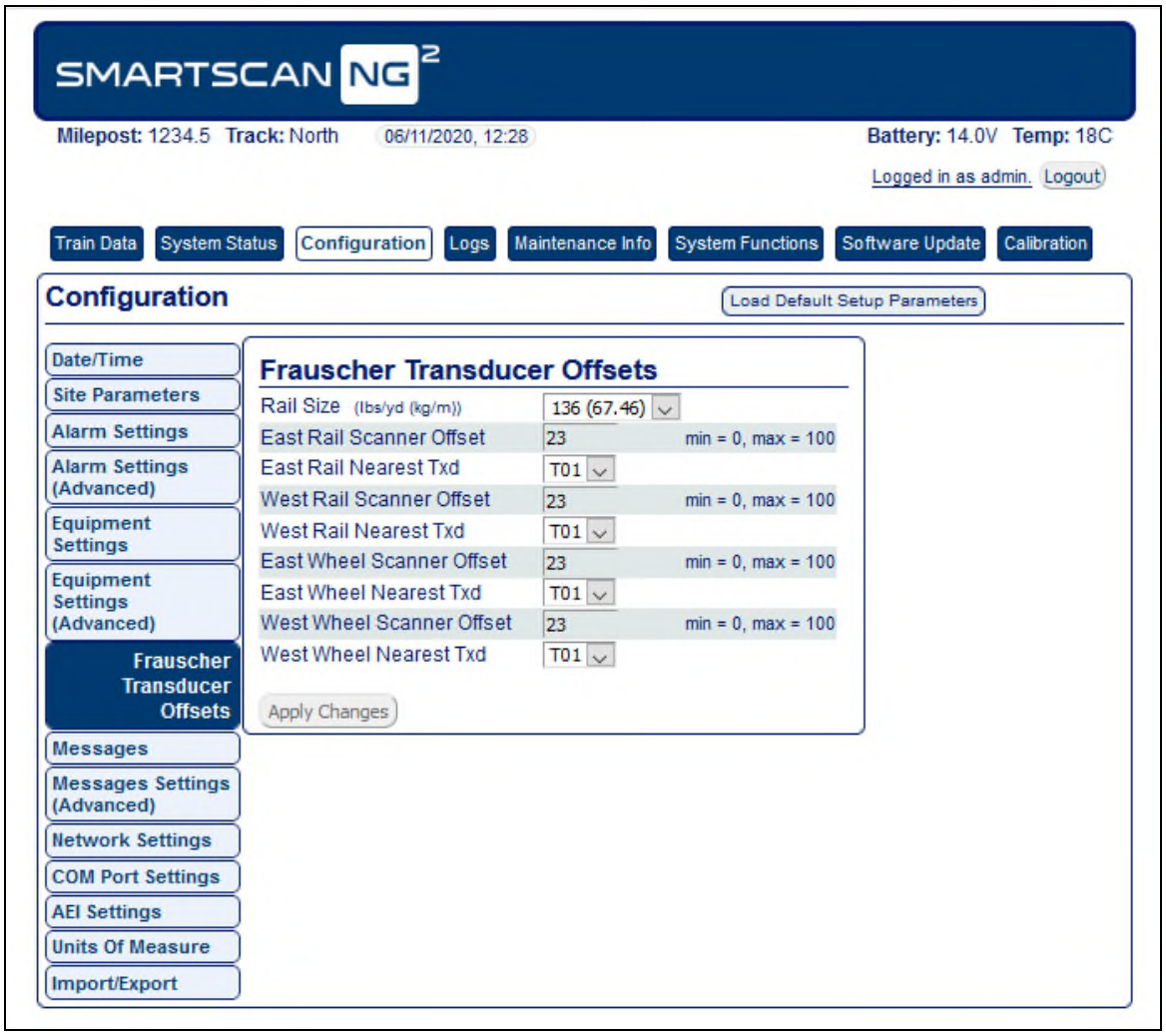

Frauscher Transducer Offsets

To modify the **Messages** settings, click on the parameter field and type the new value. The **Apply Changes b**utton will be outlined in red when changes have been entered. Left-click the **Apply Changes** button to save changes. A Changes Applied Successfully message will appear.

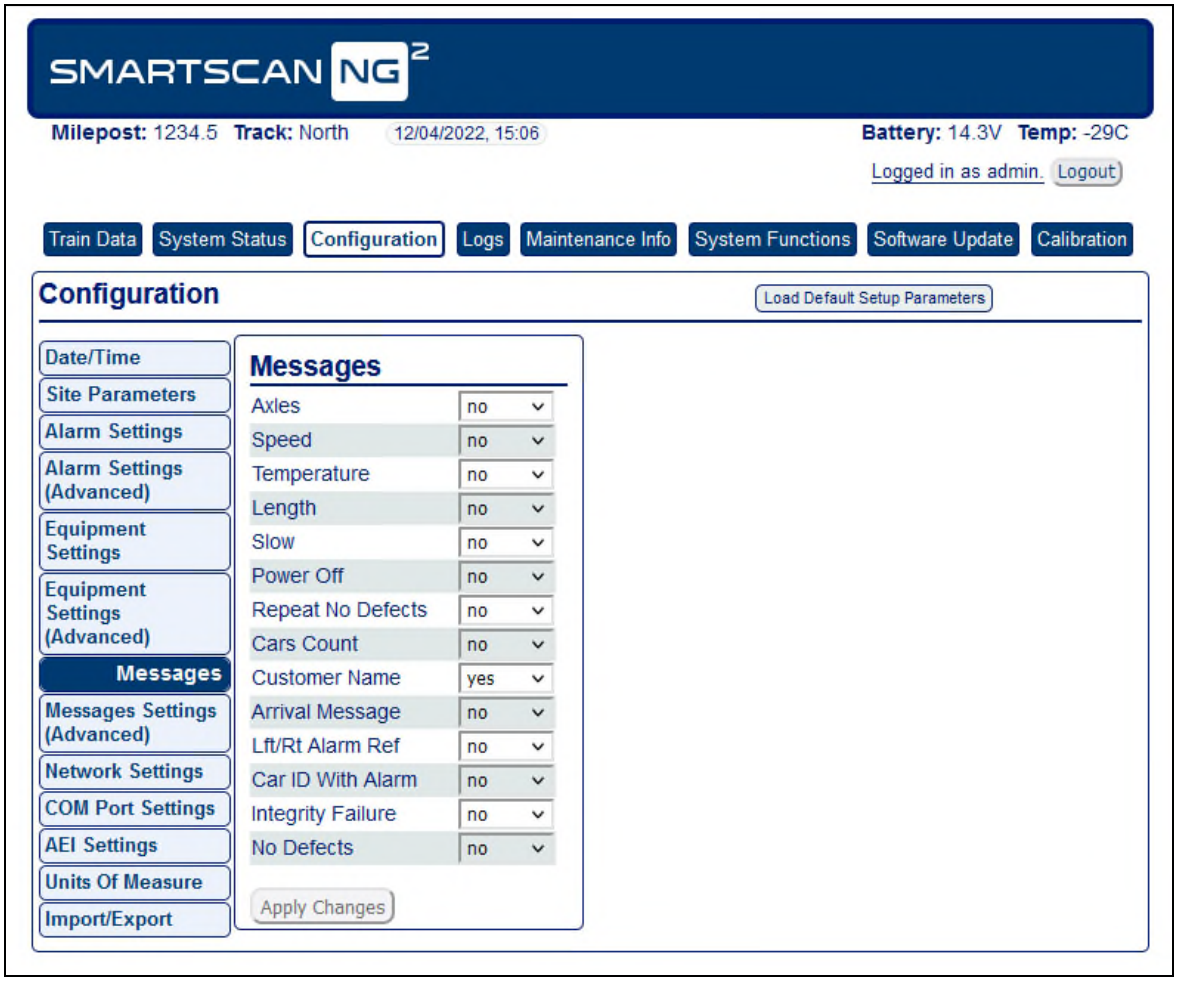

Messages

To modify the **Messages Settings (Advanced)**, click on the parameter field and type the new value. The **Apply Changes b**utton will be outlined in red when changes have been entered. Left-click the **Apply Changes** button to save changes. A Changes Applied Successfully message will appear.

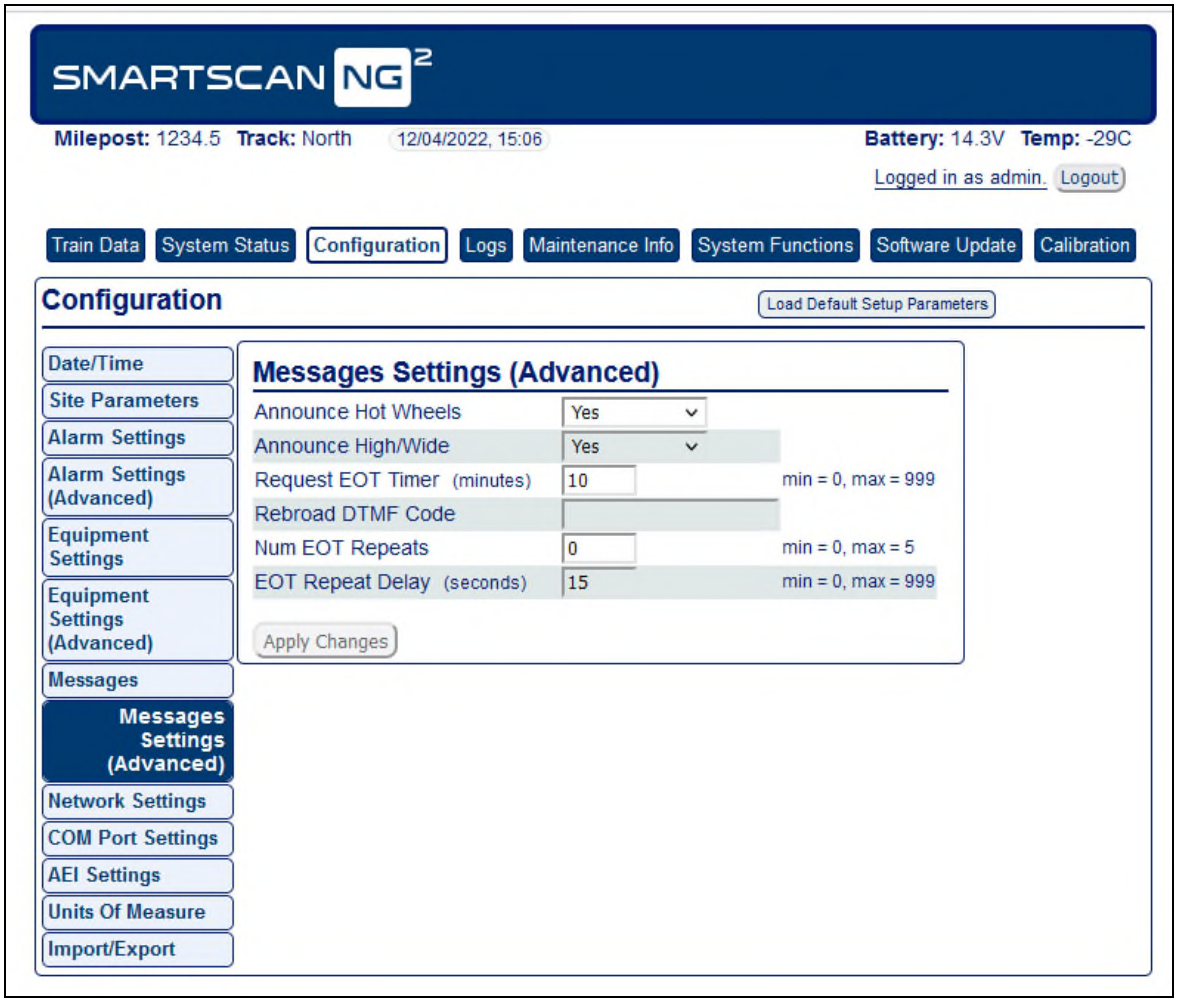

Messages Settings (Advanced)

To modify the **Network Settings**, click on the parameter field and type the new value. The **Apply Changes b**utton will be outlined in red when changes have been entered. Left-click the **Apply Changes** button to save changes. A Changes Applied Successfully message will appear.

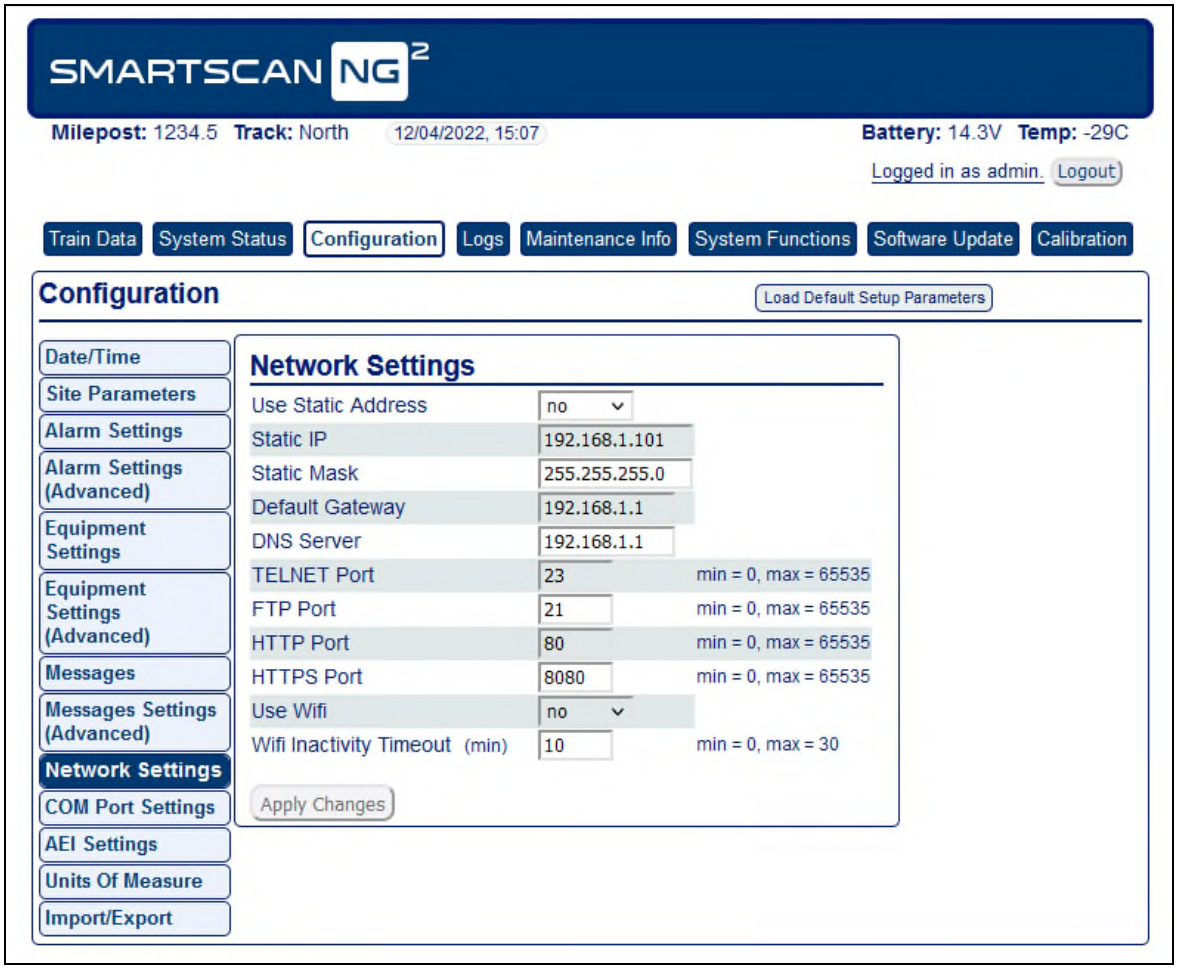

Network Settings

To modify the **COM Port Settings**, click on the parameter field and type the new value. The **Apply Changes b**utton will be outlined in red when changes have been entered. Left-click the **Apply Changes** button to save changes. A Changes Applied Successfully message will appear.

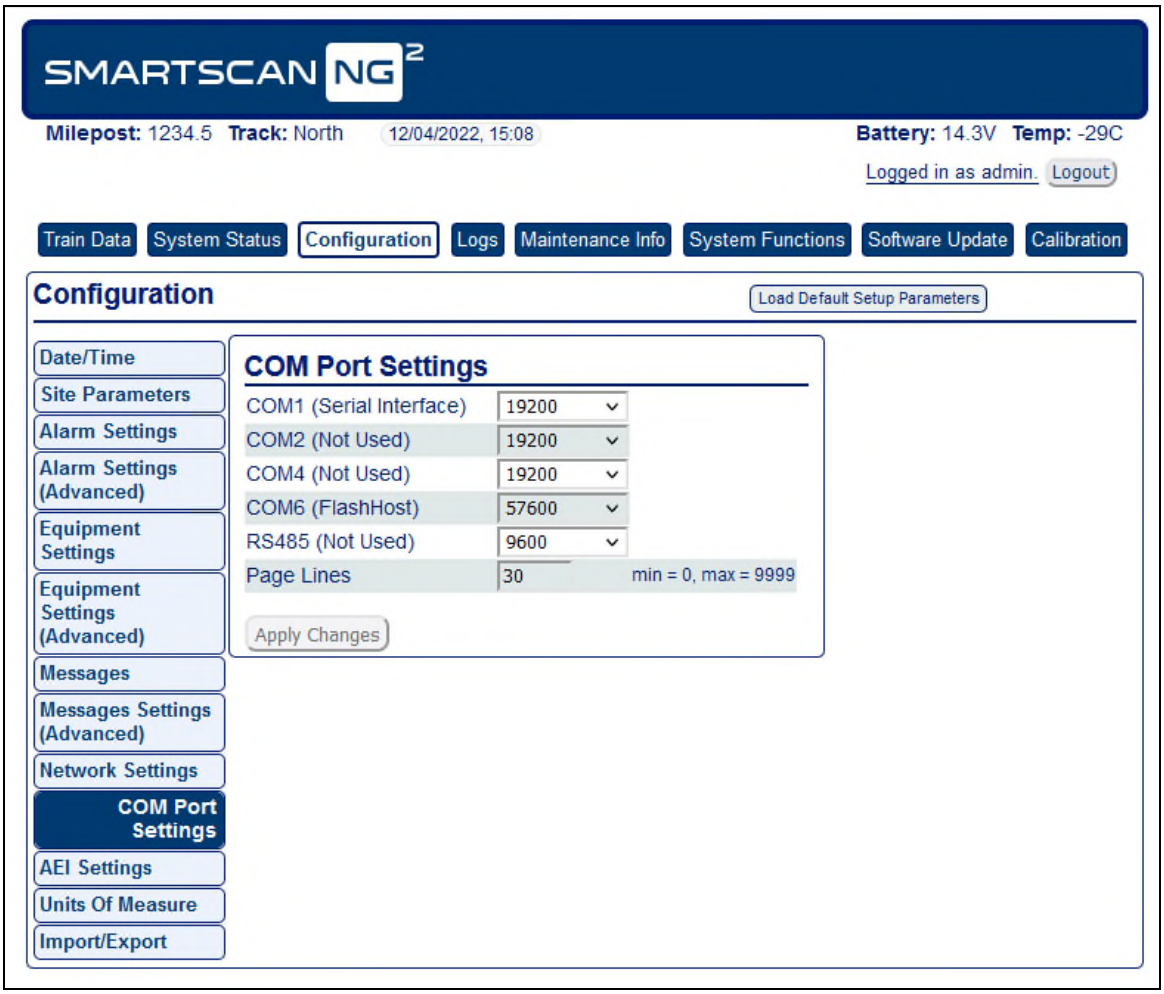

COM Port Settings

To modify the **AEI Settings**, click on the parameter field and type the new value. The **Apply Changes b**utton will be outlined in red when changes have been entered. Left-click the **Apply Changes** button to save changes. A Changes Applied Successfully message will appear.

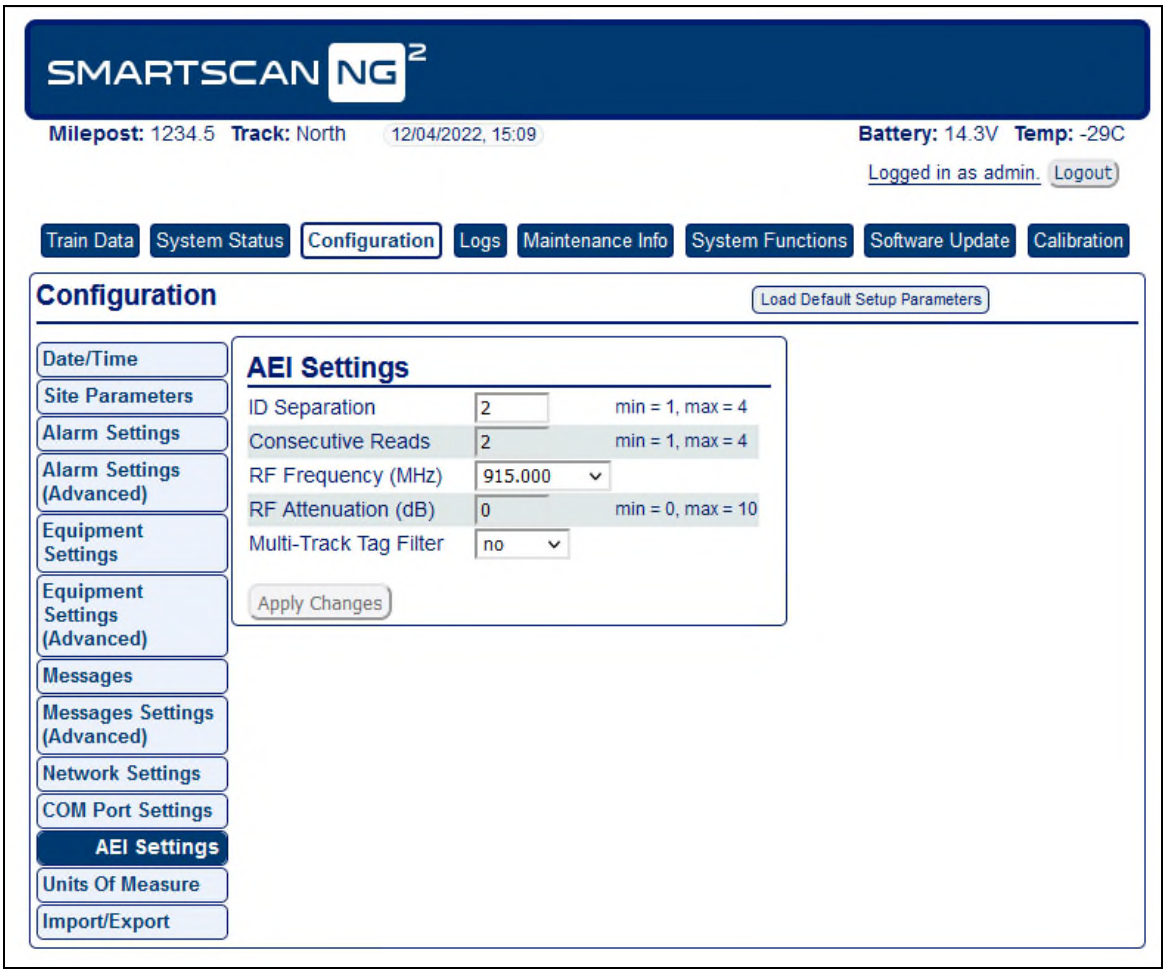

AEI Settings

To modify the **Units of Measure** settings, click on the parameter field and type the new value. The **Apply Changes b**utton will be outlined in red when changes have been entered. Left-click the **Apply Changes** button to save changes. A Changes Applied Successfully message will appear.

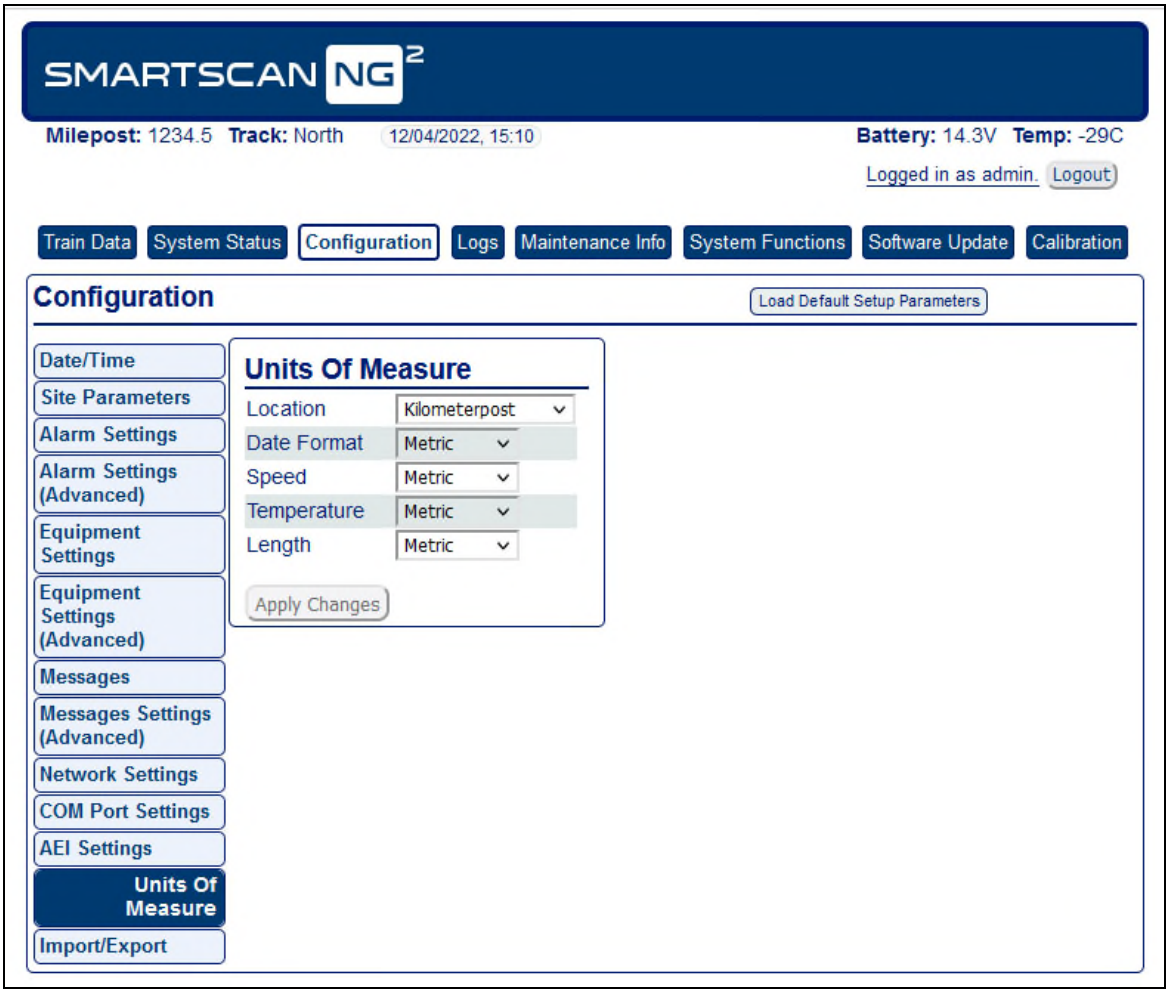

Units of Measure

To **Export** settings, check the box(es) next to the desired settings (**General**, **Network**, **Security**, or **Calibration**). Left-click **Export** to export file in .json format.
To **Import** settings, you must have the appropriate import file available (a file previously exported by an NG²) in json format. Check the box(es) for the desired settings you wish to import (**General**, **Network**, **Security**, or **Calibration**). Left-click **Import,** then select the .json file from the browser.

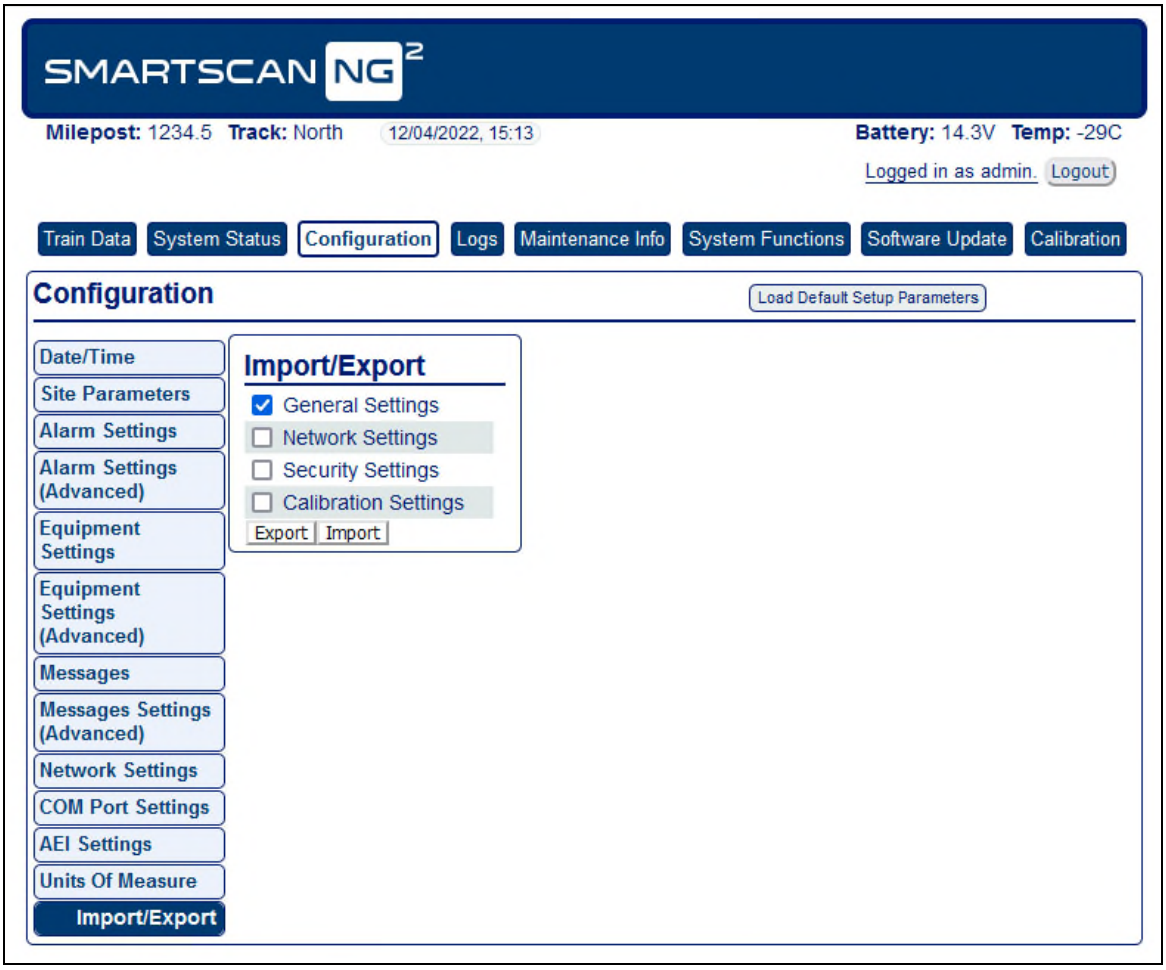

Import/Export

5.4 System Event Log

The **System Event Log** report is used for diagnostics. As certain system events occur, entries are posted into the event log. Each time an entry is made into this log, it receives an event number, the date and time that the event was recorded, and an event description. Events are listed in chronological order beginning with the most recent event.

To view the system event log, left-click the **Logs** tab. Grab and drag the slider bar to view the full report. See **System Event Log** sample depicted below.

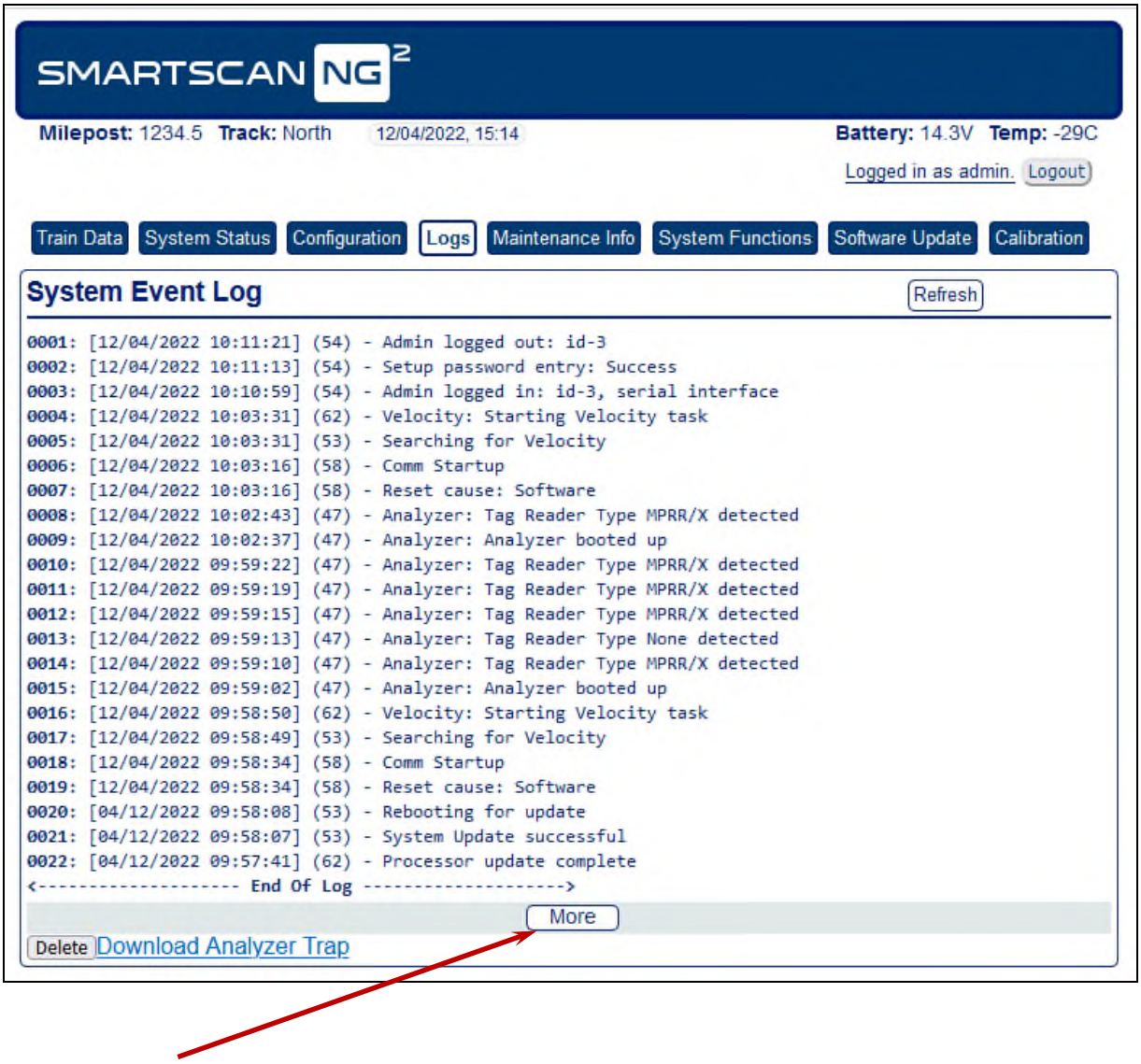

Click the "**More**" button at the bottom to load more events.

5.5 Maintenance Info

Left-click the **Maintenance Info** tab to view maintenance data. Left-click Change Train Range to change the range of trains used for maintenance calculations. The default range is the last forty trains.

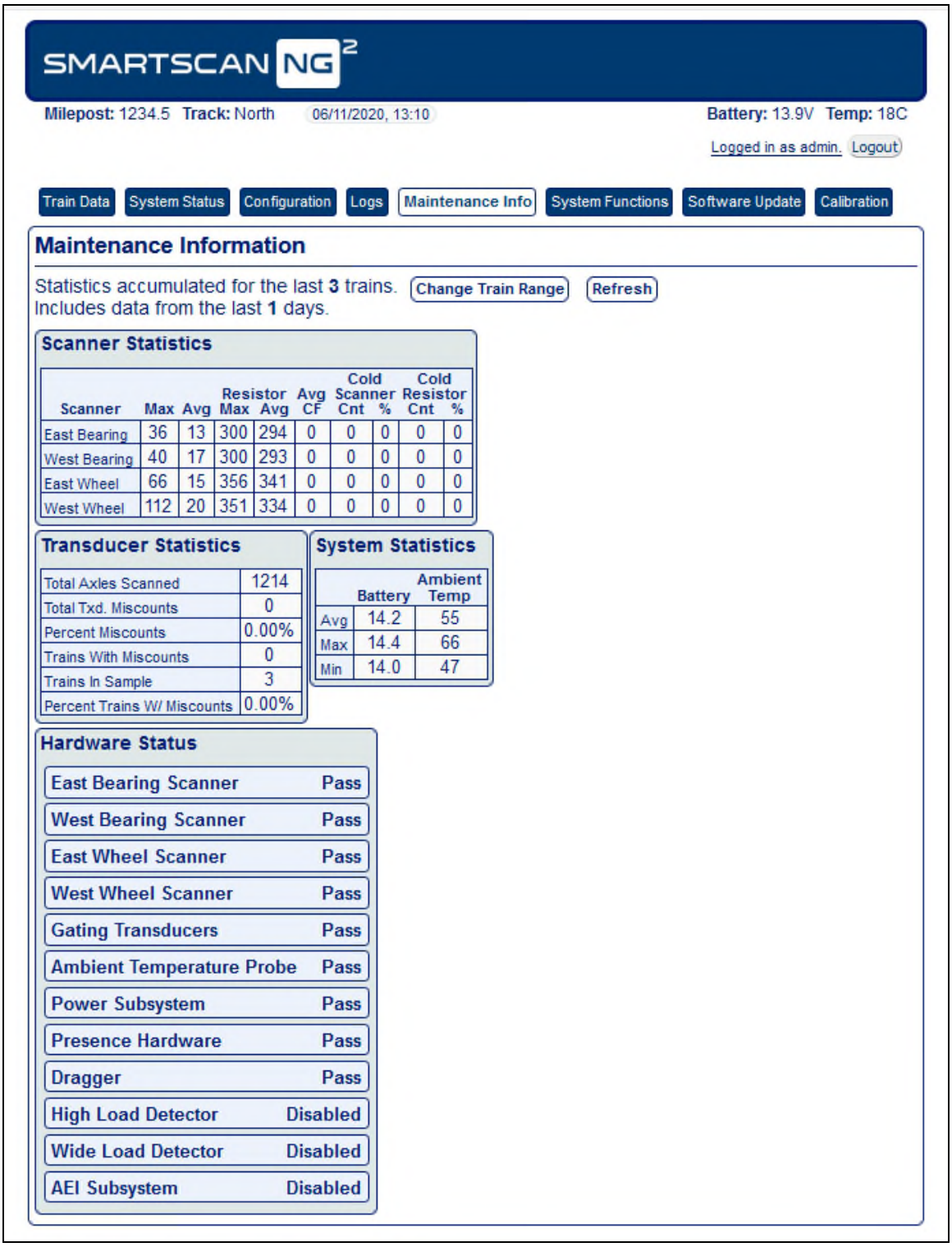

5.6 System Functions

Some but not all system functions can be accessed remotely. Left-click the **Systems Functions** tab to view available options. Left-click the corresponding button to initiate the desired function.

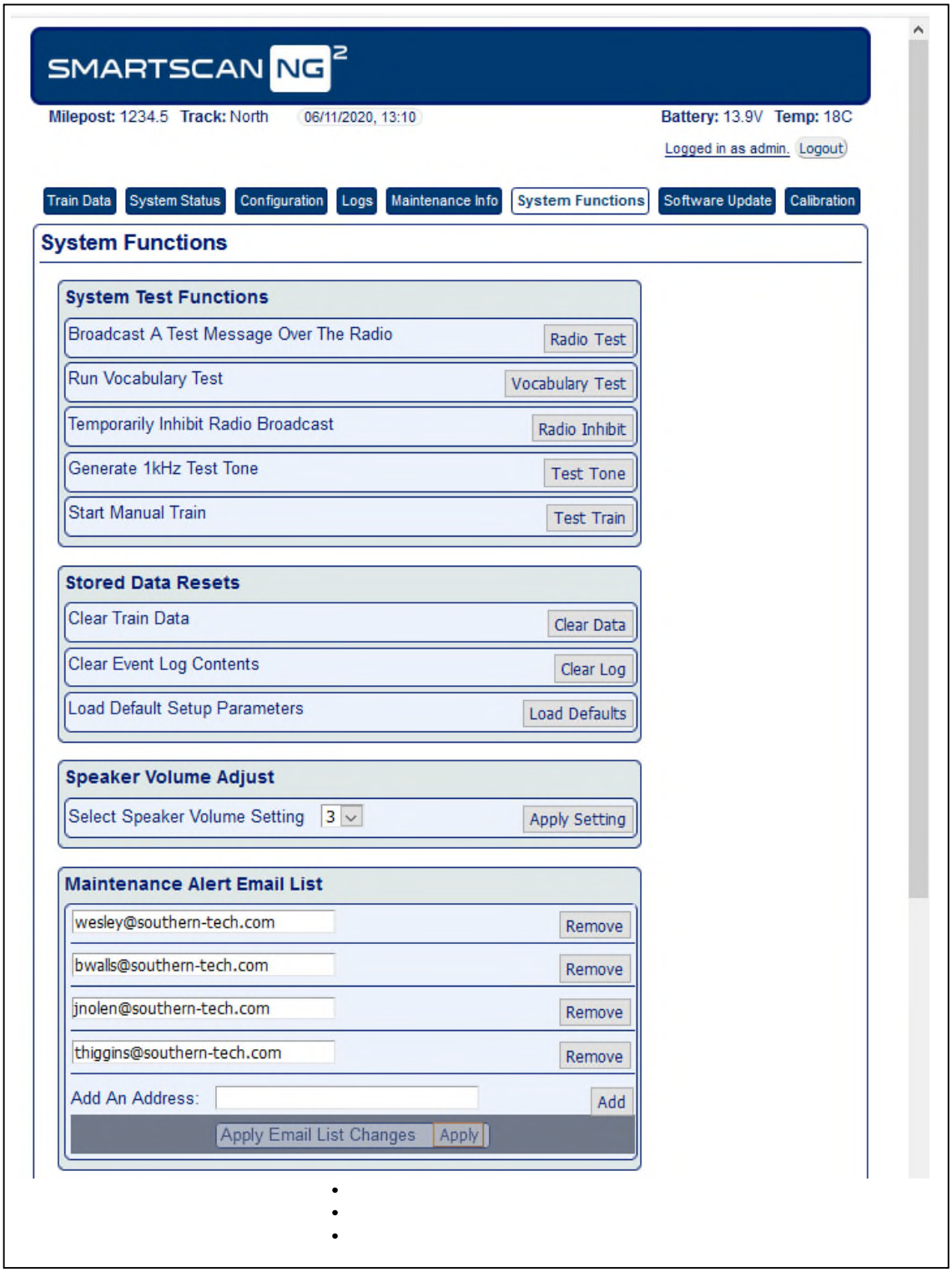

•
•
•

System Reboot

Reboot System Processors Reboot Now

Resistor Baseline Data

Scanner	Type	Date	Time	Battery Voltage	Ambient Temp	Status	30	40	50	60	70	80	90
Rail 1	Type III	30/06/20	08:44	13.9V	75F	VALID	201	203	209	209	209	208	211
Rail 2	Type III	03/09/20	08:06	13.8V	73F	VALID	189	192	198	197	199	200	202
Wheel 1	Type III	30/04/20	11:00	14.4V	52F	VALID	223	229	232	238	239	235	239
Wheel 2	Type III	30/04/20	11:00	14.4V	52F	VALID	196	192	206	211	219	215	214

5.7 Remote Software Update

To perform a remote software update, left-click the **Software Update** tab. This tab is the only way to upload software packages onto the detector. Once a package is on the detector, the user can install it either by using this tab or by using the Serial Interface.

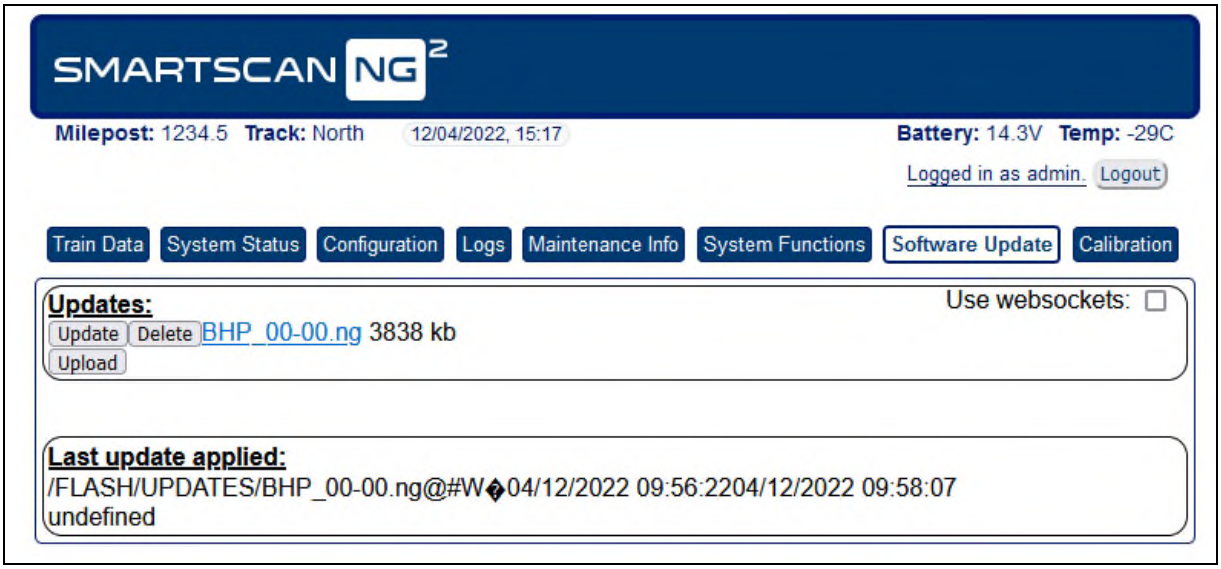

The **Upload** button is used to load a new software package onto the detector for subsequent installation. To upload a new file, left-click on the Upload button. Search for and select a software file on your computer. Only two files can be stored at a time. If there are already two files, you must delete one before uploading another.

When the upload is complete, left-click the **Update** button and follow the instructions to update the software. The **Update** button is used to install a previously uploaded software packet so that it becomes the detector's operating software.

5.8 Calibration

To perform the automatic scanner calibration function, in the Scanner Auto Calibration section of the Calibration page, left-click the **Start** button.

Note that the Frauscher Transducer Calibration section of the Calibration page will be displayed only if the system has been configured to use Frauscher transducers. The Transducer Type option under the Setup/Equipment menu must be set to Frauscher.

To perform Frauscher calibration, select TO1, TO2, or both – then left-click **the Start Calibration** button.

6.0 Producing Reports

The SmartScanNG² system provides:

- Train Summary report
- Train Detail report
- Exception Summary report
- extended Exception Detail report
- abbreviated Exception Detail report
- System Status report
- AEI Diagnostic Detail report
- Event Log report
- Maintenance report

This section shows a sample of each report with a description of each field. It also lists step-by-step instructions on producing each report, both **on-site** and **off-site**. The instructions for each report start with you being at the Main menu, which is described below.

1 If **on-site**, plug your computer into the SmartScanNG² serial port COM1.

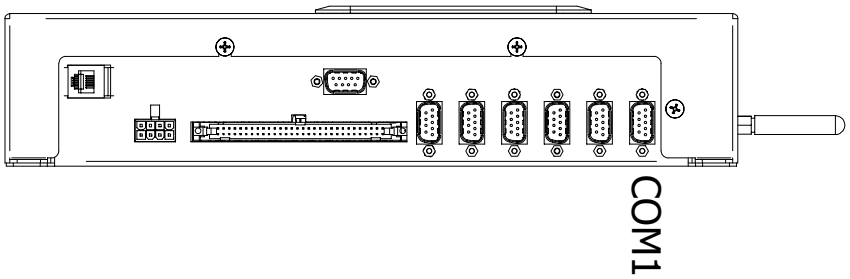

2 Turn on your computer.

3 Be sure that your computer has installed communications software, that it is set to use full-duplex, <u>and</u> that the baud rate is set to 115,200.

Use your communications software to open a LOG file and capture the whole session to the file. When your session is complete, you may then view what you have done with an editor, print it with a printer, or store it for later retrieval.

4 On your computer, open a LOG file.

5 If **off-site**, establish communications with the SmartScanNG² via Ethernet or modem as appropriate.

6 Press **[Esc]**.

This prompt appears.

```
Enter password:
```

7 Type assigned password.

The entry of this word is **not** case-sensitive.

8 To get the serial interface to come up, press **[Esc]**.

The Main menu appears.

```
SmartSCAN NG2
01/11/2022 08:31:39 EST
Main Menu - Comm
----------------------------
[A] - Train Summary
[B] - Train Detail
[C] - Exception Summary
[D] - Exception Detail
[E] - System Status Report
[F] - Last Train
[G] - Train DSRs
[H] - AEI Diagnostic
[I] - Setup
[J] - Event log
[K] - System Functions Menu
[L] - Replay train
[M] - Security Menu
[X] – Exit
```

At the above prompt, you can produce one of the listed reports by selecting the appropriate option.

If a train is at the site when the Main menu is generated, "*** Train Is Present ***" is displayed just above the menu header for the Main menu.

9 When done, close the LOG file.

10 To exit the serial interface and return the system to normal operation, type **X**.

When a session ends, if a modem is used, the system sends various commands to the modem to prepare it for future use. If at any time during the disconnect procedure, lines such as "+++ATH0" appear on your screen, these are merely commands preparing the modem for further use. They shouldn't be construed as anything that is meant for the user.

6.1 Train Summary Report

The Train Summary report lists all trains currently stored in the Trains directory. A train number is shown for each train entry so that a Train Detail report may easily be produced for any train listed on the summary.

The report is divided into a header section and a detail section. The header section contains general information about the site. The detail section contains summary information on each train that passed the site.

Below is a sample of part of a Train Summary report when Hotwheel alarm detection was disabled during report processing and when the AEI subsystem was disabled during train passage. (When the report is run, if the Hotwheel option on the Equipment Settings menu is disabled, the hotwheel information is hidden. When the report is run, if the AEI option is disabled, the tag information isn't hidden.) The contents of your report will be different. The version information in the sample below is for illustrative purposes only. It doesn't represent any real release of the firmware.

```
                         Southern Technologies Corporation
                          Next Generation Detector System
                                   TRAIN SUMMARY
==============================================================================
Software Version: EX_01-00 2020-10-28                          MP/KP: 1234.5
                                                                Track: North
Current Alarm Settings
Absolute...... 150   Carside Slope... 1.31
Differential.. 255   Minimum.........  90
Hot Wheel..... 500   Cold Rail Temp..  10

Total Trains: 19
------------------------------------------------------------------------------
                                          D              Bearing     Bearing
                                          i    Speed     Average     Maximum     Amb
Train#   Date   Time Cars Axles TO1  TO2 r Min Max Xit East  West  East  West  Temp  Bat
-------------------------------------------------------------------------------------------
  19B  02/11/22 05:08  67  272  272  272 S   6  30  10   23    21    48    49  +24F 13.0v
  18B  02/11/22 04:13  68  276  276  276 N  24  33  32   15    13    29    30  +27F 13.1v
  17B  02/11/22 03:51  52  332  332  332 N  23  36  36   15    14    35    39  +27F 13.0v
  16B  02/11/22 03:14 131  530  530  530 N   9  29  29    8     5    27    20  +27F 13.0v
  15B  02/11/22 01:26  49  318  318  318 S   7  11   8   17    16    34    31  +27F 13.1v
  14B  02/11/22 00:49  75  304  304  304 S   5  14   9   19    17    36    34  +26F 13.0v
  13B  02/11/22 00:08  85  346  346  346 N  21  32  32   17    16    40    30  +27F 12.9v

  12B  02/10/22 23:08  84  342  342  342 N   7  27  27    7     5    23    19  +27F 13.0v
  11B  02/10/22 22:38  98  398  398  398 N   8  28  27    6     3    29    19  +27F 13.1v
  10B  02/10/22 20:59  92  372  372  372 S  19  24  22    8     5    26    28  +26F 13.1v
                        •
                        •
                        •

END OF REPORT - Press any key...
```

Below is a sample of part of a Train Summary report when the Hotwheel option on the Equipment Settings menu is enabled. The contents of your report will be different.

```
                        •
                        •

Current Alarm Settings
Absolute...... 150   Carside Slope... 1.31
Differential.. 255   Minimum.........  90
Hot Wheel..... 500   Cold Rail Temp..  10

Total Trains: 20
-------------------------------------------------------------------------------
                                          D              Bearing      Wheel
                                          i    Speed     Average     Maximum     Amb
Train#   Date   Time Cars Axles TO1  TO2 r Min Max Xit East  West  East  West  Temp  Bat
-----------------------------------------------------------------------------------------

                        •
                        •
                        •

END OF REPORT - Press any key...
```

The table below lists the fields from the header section and the contents of each field.

Heading	Contents of Field
Version Info	The version numbers of the firmware and their release dates, which are in mm/dd/yy format. This firmware resides on the processor modules.
MP/KP	The five-digit milepost/kilometer post of the site. ***Section 4.0 - Serial Interface*** tells how to change this value using the MP/KP submenu.
Track	The track designator of the site. For single-track sites, the value is Single. For double-track sites, valid values are North, South, East, West, Main 1, Main 2, Main 3, and Middle. ***Section 4.0 - Serial Interface*** tells how to set this value using the Track Number submenu of the Setup menu.
Alarm Limits	The alarm parameters currently defined in the system setup. These values were in place at the time this report was run. • The value after Absolute is set by the Absolute option on the Alarm Settings menu. • The value after Differential is set by the Differential option on the Alarm Settings menu. • The heading Hot Wheel only appears when the Hotwheel option on the Equipment Settings menu is enabled. The value after Hot Wheel is set by the Hotwheel option on the Alarm Settings menu. • The value after Carside Slope is set by the Carside Slope option on the Alarm Settings menu. • The value after Minimum is set by the Carside Minimum option on the Alarm Settings menu. • The value after Cold Rail Temp is set by the Cold Rail Temperature option on the Alarm Settings menu. ***Section 4.0 - Serial Interface*** tells how to set these values.
Total Trains	The total number of trains visiting the site since the Trains directory was last cleared.

The table below lists the fields from the detail section and the contents of each field.

Heading	Contents of Field
Train#	The number that identifies the train in the Trains directory.
Date	The date the train arrived at the site. Date is in mm/dd/yy format. ***Section 4.0 - Serial Interface*** tells how to change this value using the Date and Time submenu of the Setup menu.
Time	The time the train arrived at the site. Time is in 24-hour hh:mm format, where 8 a.m. is 08:00, noon is 12:00, 8 p.m. is 20:00, and midnight is 00:00. ***Section 4.0 - Serial Interface*** tells how to change this value using the Date and Time submenu of the Setup menu.
Cars	The total number of cars counted by the SmartScanNG² system.
Axles	The total number of axles counted by the SmartScanNG² system.
TO1	The total number of hits counted by gating transducer TO1. TO1 is the first gating transducer going north or east from the bearing scanner. It is the gating transducer closest to the bearing scanner.
TO2	The total number of hits counted by gating transducer TO2. TO2 is the second gating transducer going north or east from the bearing scanner. It is the gating transducer farthest from the bearing scanner.
AEI Tags	The total number of AEI tags stored. The number of tag pairs found plus those single tags that lack a match. This heading always appears, even if the AEI subsystem is disabled using the AEI option on the Equipment Settings menu.
Speed (kph)	The train's exit speed in Kilometers per hour.
Dir	The direction the train was traveling. Valid values are N, S, E, and W.
Rail Average	Under this heading are two columns, one for each bearing scanner, containing the average temperature read by the bearing scanners. If the track orientation is east and west, the bearing scanners are labeled north and south. If the track orientation is north and south, they are labeled east and west.
Wheel Maximum	Under this heading are two columns, one for each wheel scanner, containing the maximum temperature read by the wheel scanners. If the track orientation is east and west, the wheel scanners are labeled north and south. If the track orientation is north and south, they are labeled east and west. This field appears only when the Hotwheel option on the Equipment Settings menu is enabled.
Amb Temp	The ambient temperature, in degrees Fahrenheit, at the time the train arrived at the site.
Bat	The system battery voltage at the time the train passed the site.

The Train Summary report contains three unlabeled columns that may contain one-character status codes. In the Train Summary excerpt below, these columns have been highlighted and labeled. Following the Train Summary excerpt is a brief explanation of each column along with a table containing possible values for that column.

A B C

Train#	Date	Time	Cars	Axles	TxD Counts TO1	TxD Counts TO2	TxD Spikes TO1	TxD Spikes TO2	Dir	Speed Min	Speed Max	Speed Xit	Bearing Average East	Bearing Average West	Bearing Maximum East	Bearing Maximum West	AEI Tags	Amb Temp	Bat
266	01/19/22	22:20	55	454	454	454	0	0	N	6	26	6	29	29	53	57	112	74F	27.9v
265AC	01/19/22	21:24	27	114	114	114	0	0	N	14	18	14	23	22	39	39	53	77F	27.9v
264	01/19/22	16:40	134	544	544	544	0	0	N	27	35	27	17	17	45	48	186	87F	28.0v
263	01/19/22	16:21	112	456	456	456	0	0	N	35	40	35	19	19	56	51	147	88F	27.9v
262	01/19/22	11:40	27	112	112	112	0	0	N	48	48	48	23	24	52	59	52	83F	27.9v
261S*	01/19/22	11:17	27	114	114	114	0	0	S	26	29	26	9	9	29	34	51	84F	27.9v
260	01/19/22	10:21	138	560	560	560	0	0	S	28	40	28	20	21	49	48	193	80F	27.8v
259	01/19/22	08:38	77	320	320	320	0	0	N	29	30	29	20	21	51	50	151	72F	27.8v
258	01/19/22	07:25	48	334	334	334	0	0	N	43	49	45	24	24	48	50	93	67F	27.9v
B257I	01/19/22	04:21	39	266	266	266	0	0	N	9	20	20	28	26	63	55	78	69F	27.9v

⋮

(Column A) - Below are the characters that can be printed in the DSR status column of the Train Summary report. This column appears just before the Train# column.

Character	Definition
(blank)	There were no DSR records captured for this train
B	DSR records for bearing scanners were captured for this train.
W	DSR records for wheel scanners were captured for this train.
+	DSR records for bearing and wheel scanners were captured for this train.

(Column B) - Below are the characters that can be printed in the Alarm status column of the Train Summary report. This column appears just after the Train# column and right before the Correction Factor column.

Character	Definition
(blank)	The train did not contain any exception alarms, integrity failures, or system alarms.
A	The train contained exception alarms but no integrity failures.
I	The train contained integrity failures but no exception alarms.
B	The train contained exception alarms and integrity failures.
S	The train did not contain any exception alarms or integrity failures but did contain system alarms.
T	The train was a test train.

(Column C) - Below are the characters that can be printed in the Correction Factor (CF) status column of the Train Summary report. This column appears just after the Alarm status column and right before the date column.

Character	Definition
(blank)	Resistor test passed.
C	The train had one or more correction factors greater than 25%.
*	The resistor test results were overridden for one or more scanners.

To produce a Train Summary report:

1. Using the serial interface, display the Main menu.

   Section 4.0 - Serial Interface tells how to display the Main menu. The Main menu looks like this.

```
SmartSCAN NG2
02/11/2022 09:12:21 EST
Main Menu - Comm
----------------------------
[A] - Train Summary
[B] - Train Detail
[C] - Exception Summary
[D] - Exception Detail
[E] - System Status Report
            .
            .
            .
```

2. Select **Train Summary**.
3. To exit the serial interface and return the SmartScanNG² system to normal operation, type **X**.

6.2 Train Detail Report

The Train Detail report provides detailed information on a single train. When choosing this report, you'll be prompted for a train number. When prompted, enter a train number from the Train Summary report. The train number appears under the column titled "Train#" in the detail section of the Train Summary report.

Carside Slope alarm detection is enabled/disabled using the Carside Slope option on the Equipment Settings menu. Hotwheel alarm reporting is enabled/disabled using the Hotwheel option on the Equipment Settings menu. The AEI subsystem is enabled/disabled using the AEI option on the Equipment Settings menu.

Where wheel scanners are properly installed, wheel temperatures are always recorded, even if the Hotwheel option is disabled. On the other hand, if the AEI option is disabled during train passage, no AEI information is recorded. If the Carside Slope option is disabled during train passage, no Carside Slope alarms are generated. But, if it is enabled at the time a report is requested, a carside-slope alarm-limit line is generated for each car of the train.

The Train Detail Report can be printed in either extended or abbreviated format. The abbreviated report option is defined in the subsequent section. When printing an extended version of a Train Detail report, a copy of the current system parameters appears at the end of the report. This appended information is almost a complete copy of the System Status report.

Below is a sample of part of a Train Detail report when both the AEI option and the Hotwheel option on the Equipment Settings menu were enabled at the time the report was requested. The Carside Slope option on the Equipment Settings menu was disabled. Also, both the AEI and Hotwheel options were enabled while the specified train was passing the site. The contents of your report will be different. The version information in the sample below is for illustrative purposes only. It doesn't represent any real release of the firmware.

```
==============================================================================
                        Southern Technologies Corporation
                         Next Generation Detector System
                                   TRAIN DETAIL
==============================================================================
Train#:   9                Axles: 82        Speed (kph)           MP/KP: 1233.8
  Date: 11/12/22            Cars: 18          Min: 80              Track: West
  Time: 08:13          Direction: North       Max: 80       Temperature:  +13C
                   Shutters Open: 25          Avg: 80           Battery: 14.4v
                          Length: 340m       Exit: 80
==============================================================================
                   Resistor        Txdr
Scanner    Max Avg Read Req  CF    Counts     Alarm        Limit  Carside Parms
---------------------------------   -------    ------------------  -------------
East  Brng  23  22    0   0T   0   TO1  82    Absolute       180  Slope:   1.31
West  Brng  24  23    0   0T   0   TO2  82    Differential    75  Minimum:   90
East  Whl    1   1    0   0T   0              N/E Hot Wheel  500
West  Whl    4   4    4   0T   0              S/W Hot Wheel  500
                                                Cold Rail Temp  10
Resistor Test Mode: Enabled
==============================================================================
Software Version: EX_01-00 2020-10-28
==============================================================================
AEI System Data

Tags Read          Tags Stored: 35
--------------
Antenna 0: 17
Antenna 1: 18


------------------------------------------------------------------------------
System Alarms

 None

------------------------------------------------------------------------------
Integrity Failures

 None

------------------------------------------------------------------------------
Axle Alarm Summary

 NONE
                              .
                              .
                              .
(continued on next page)
```

Train Detail - Extended

Train Detail - Extended (continued)

```
                                 •
                                 •
                                 •
   ---------------------------------------------------------------------------
   Announcements made

   " detector at kilometer post 1 2 3 3 point 8 west track "
   " detector at kilometer post 1 2 3 3 point 8 west track no defects repeat no defects total
axles 8 2 "
   " detector at kilometer post 1 2 3 3 point 8 west track no defects repeat no defects total
axles 8 2 detector out "
   ---------------------------------------------------------------------------
                Rail       Wheel
    Car Axle  East  West  East  West   ON    OFF PW1 PW2  Alarms
   ---------------------------------------------------------------------------
      1    1    22    23     1     4   27     74  19  19 CSXT    729
           2    22    23     1     4   27     50  19  19
           3    22    23     1     4   27     50  19  19
           4    22    23     1     4   27    422  19  19
           5    22    23     1     4   27     50  19  19
           6    22    23     1     4   27     50  19  19
        Carside Ave: East  22 West  23   Carside Alarms: East 118 West 120

      2    7    22    23     1     4   27    126  19  19 TBOX 667179
           8    22    23     1     4   27     50  19  19
           9    22    23     1     4   27     50  19  19
          10    22    23     1     4   27    423  19  19
          11    22    23     1     4   27     50  19  19
          12    22    23     1     4   27     50  19  19
        Carside Ave: East  22 West  23   Carside Alarms: East 118 West 120

      3   13    22    23     1     4   27    126  19  19 TBOX 663532
          14    22    23     1     4   27     50  19  19
          15    22    23     1     4   27     50  19  19
          16    22    23     1     4   27    422  19  19
          17    23    24     1     4   26     50  19  19
          18    22    23     1     4   27     50  19  19
        Carside Ave: East  22 West  23   Carside Alarms: East 118 West 120

      4   19    22    23     1     4   27    124  19  19 UTCX  54589
          20    22    23     1     4   27     50  19  19
          21    22    23     1     4   27    422  19  19
          22    22    23     1     4   27     50  19  19
        Carside Ave: East  22 West  23   Carside Alarms: East 118 West 120

      5   23    23    24     1     4   26    121  19  19 GPFX  10816
          24    22    23     1     4   27     50  19  19
          25    22    23     1     4   27    423  19  19
          26    22    23     1     4   27     50  19  19
        Carside Ave: East  22 West  23   Carside Alarms: East 118 West 120
                                 •
                                 •
                                 •
```

The Train Detail report is divided into three sections. The header section contains general information about the site (like the MP/KP) and some detail information about the specific train (like the train's exit speed) that passed the site. The detail section contains more detailed information (like the car number) about the specific train. In between these two sections is the system-events section, which contains all System Alarms and Exception Alarms associated with the train.

The table below lists the fields from the header section and the contents of each field.

Heading	Contents of Field
Train#	The number that identifies the train in the Trains directory.
Date	The date the train arrived at the site. Date is in mm/dd/yy format. ***Section 4.0 - Serial Interface*** tells how to change this value using the Date and Time submenu of the Setup menu.
Time	The time the train arrived at the site. Time is in 24-hour hh:mm format, where 8 a.m. is 08:00, noon is 12:00, 8 p.m. is 20:00, and midnight is 00:00. ***Section 4.0 - Serial Interface*** tells how to change this value using the Date and Time submenu of the Setup menu.
Length	The length of train in feet.
Speed	The train's minimum, maximum, average, and exit speeds in Kilometers per hour.
Axles	The total number of axles counted by the SmartScanNG² system.
Direction	The direction the train was traveling. Valid values are North, South, East, and West.
Shutters Open	The number of seconds it took the train to pass over the site.
MP/KP	The five-digit milepost/kilometer post of the site. ***Section 4.0 - Serial Interface*** tells how to change this value using the MP/KP submenu of the Setup menu.
Track	The track designator of the site. For single-track sites, the value is Single. For double-track sites, valid values are North, South, East, West, Main 1, Main 2, Main 3, and Middle. ***Section 4.0- Serial Interface*** tells how to set this value using the Track Number submenu of the Setup menu.
Temperature	The ambient temperature at the time the train arrived at the site. Temperature is in degrees Fahrenheit.
Battery	The system battery voltage at the time the train passed the site.
Brng	Location of the bearing scanners. If the track orientation is east and west, the bearing scanners are labeled north and south. If the track orientation is north and south, they are labeled east and west
Max	The maximum temperature, above the ambient temperature in degrees Fahrenheit, recorded by the bearing scanner on a given railside. For example, if the ambient temperature (at the time the train arrived at the site) is 77°F (25°C) and the value in this field is 112, the maximum temperature would be 189°F (87.2°C).
Avg	The average temperature, above the ambient temperature in degrees Fahrenheit, calculated from all recorded temperatures from the bearing scanner on a given railside. For example, if the ambient temperature (at the time the train arrived at the site) is 86°F (30°C) and the value in this field is 55, the average temperature would be 141°F (60.6°C).

Heading	Contents of Field
Resistor Read	The scanner resistor temperature (read after train passage), in degrees Fahrenheit, recorded by the bearing scanner on a given railside.
Resistor Req	The resistor temperature, in degrees Fahrenheit, required by the bearing scanner on a given railside to avoid a Cold Resistor alarm. This value was calculated using the amount of time the shutters were open and the Resistor Test Mode option in effect at the time the train exits the site. If the Resistor Test Mode option is disabled, a zero appears in this field.
	One of five uppercase letters follows the Resistor Req temperature. **B** The baseline resistor integrity test method was used for this train. **D** The resistor integrity test (that is, the Resistor Test Mode option) was disabled by the user. **I** The interim resistor integrity test method was used for this train. **T** For this train, the shutters were open for less than 30 seconds. **V** For this train, the battery voltage (measured with the shutters open) was less than 12.5 volts. For **D**, **T**, and **V**, the required resistor heat is set to zero (that is, a zero appears in the Resistor Read field). A **T** or **V** indicates that the integrity test was not performed due to low voltage or insufficient shutter open time, which could result in an invalid resistor integrity test if it was performed.
CF	The percentage difference between the required resistor value and the value that was actually read. For example, if the required resistor temperature is 180 and the actual resistor temperature is 135, the correction factor would be 25% (1 - (135 / 180) = .25), and 25 would appear in this field.
Txdr Counts	The gating transducer designator (either TO1 or TO2) followed by the total number of hits on that transducer.
Alarm Limit	The Hotwheel alarm level; the Hotbox alarm levels for Absolute and Differential, and the Cold Rail Temperature offset. These values were in place at the time the train arrived at the site. • The value after Absolute is set by the Absolute option on the Alarm Settings menu. • The value after Differential is set by the Differential option on the Alarm Settings menu. • The value after Hot Wheel is set by the Hotwheel option on the Alarm Settings menu. • The value after Cold Rail Temp is set by the Cold Rail Temperature option on the Alarm Settings menu. ***Section 4.0 - Serial Interface*** tells how to set these values.

Heading	Contents of Field
Carside Parms	The Carside Slope alarm parameter values that were in place at the time the train arrived at the site. • The value after Carside Slope is set by the Carside Slope option on the Alarm Settings menu. • The value after Minimum is set by the Carside Minimum option on the Alarm Settings menu. ***Section 4.0 - Serial Interface*** tells how to set these values.
Resistor Test Mode	The status of the post-train resistor integrity test at the time the train arrived at the site. Valid values (aka modes) are Enabled, Reduced, and Disabled. ***Section 4.0 - Serial Interface*** tells how to set this value using the Resistor Test Mode option on the Equipment Settings menu.
Wheel	The location of the wheel scanners. If the track orientation is east and west, the wheel scanners are labeled north and south. If the track orientation is north and south, they are labeled east and west. This field only appears when Hotwheel alarm reporting is enabled using the Hotwheel option on the Equipment Settings menu.
Max	The maximum temperature, above the ambient temperature in degrees Fahrenheit, recorded by the wheel scanner on a given railside. This field only appears when Hotwheel alarm reporting is enabled using the Hotwheel option on the Equipment Settings menu.
Avg	The average temperature, above the ambient temperature in degrees Fahrenheit, calculated from all recorded temperatures from the wheel scanner on a given railside. This field only appears when Hotwheel alarm reporting is enabled using the Hotwheel option on the Equipment Settings menu.
Resistor Read	The scanner resistor temperature (read after train passage), in degrees Fahrenheit, recorded by the wheel scanner on a given railside. This field only appears when Hotwheel alarm reporting is enabled using the Hotwheel option on the Equipment Settings menu.
Resistor Req	The resistor temperature, in degrees Fahrenheit, required by the wheel scanner on a given railside to avoid a Cold Wheel Scanner Resistor alarm. This value was calculated using the amount of time the shutters were open and the Resistor Test Mode option in effect at the time the train exits the site. If the Resistor Test Mode option is disabled, a zero appears in this field. This field only appears when Hotwheel alarm reporting is enabled using the Hotwheel option on the Equipment Settings menu.

Heading	Contents of Field
	One of five uppercase letters follows the Resistor Req temperature. **B** The baseline resistor integrity test method was used for this train. **D** The resistor integrity test (that is, the Resistor Test Mode option) was disabled by the user. **I** The interim resistor integrity test method was used for this train. **T** For this train, the shutters were open for less than 30 seconds. **V** For this train, the battery voltage (measured with the shutters open) was less than 12.5 volts. For **D**, **T**, and **V**, the required resistor heat is set to zero (that is, a zero appears in the Resistor Read field). A **T** or **V** indicates that the integrity test was not performed due to low voltage or insufficient shutter open time, which could result in an invalid resistor integrity test if it was performed.
CF	The percentage difference between the required resistor value and the value that was actually read. For example, if the required resistor temperature is 180 and the actual resistor temperature is 135, the correction factor would be 25% (1 - (135 / 180) = .25), and 25 would appear in this field.
AEI System Data	The number of AEI tags read (by antenna0 and antenna1) and the total number of tags stored for the train. Where both tags of a tag pair are operational, each antenna will read one tag of the pair. The total number of tags stored represents the number of tag pairs found plus those single tags that lack a match. This heading and the columns under it appear only when the AEI subsystem is enabled using the AEI option on the Equipment Settings menu.
Firmware Versions	The version numbers of the firmware and their release dates, which are in mm/dd/yy format. This firmware resides on the processor modules.

The table below lists the fields from the system-events section and the contents of each field.

Heading	Contents of Field
System Alarms	Lists any System Alarms and Integrity Failures detected at the time the train passed the site. If none were detected, this header is followed by the word "none." ***Appendix A - System Alarms*** describes the conditions and events that the system flags as System Alarms. ***Appendix B - Integrity Failures*** describes the conditions and events that the system flags as Integrity Failures.
Axle Alarm Summary	Lists each Exception Alarm found on the train and the axle on which it was found. If none were found, this header is followed by the word "none."

The table below lists the fields from the detail section and the contents of each field.

Heading	Contents of Field
Car	The car number as determined by the firmware.
Axle	The axle number.
Trk	The truck number. Each railroad vehicle has two or more trucks (that is, wheel assemblies). The trucks are numbered, starting with 0, and increasing from the beginning of the train to the end. Each axle record is associated with one of these trucks. The axles are assigned the number of the truck with which they've been associated. These assigned truck numbers appear in this field. If the Hotwheel option on the Equipment Settings menu is enabled, this field doesn't appear.
Rail	Under this heading are two columns, one for each bearing scanner, containing the temperature read by the bearing scanners. If the track orientation is east and west, the bearing scanners are labeled north and south. If the track orientation is north and south, they are labeled east and west. If the Hotwheel option on the Equipment Settings menu is disabled, the word "Rail" doesn't appear, but the two columns do.
Wheel	Under this heading are two columns, one for each wheel scanner, containing the temperature read by the wheel scanners. If the track orientation is east and west, the wheel scanners are labeled north and south. If the track orientation is north and south, they are labeled east and west. This heading and the two columns under it appear only when the Hotwheel option on the Equipment Settings menu is enabled.
ON	The number of milliseconds a bearing was scanned.
OFF	The number of milliseconds between axles (when no axle was between the gating transducers).
PW1	The recorded width of the pulse generated by gating transducer TO1. There is no fixed value for the pulse widths. Slower trains generate wider pulse widths (that is, they generate larger values) than faster moving trains.
PW2	The recorded width of the pulse generated by gating transducer TO2. There is no fixed value for the pulse widths. Slower trains generate wider pulse widths (that is, they generate larger values) than faster-moving trains.
Alarms	Any Exception Alarm found on the given axle.

To produce an extended Train Detail report:

1. Using the serial interface, display the Main menu.

   Section 4.0 - Serial Interface tells how to display the Main menu. The Main menu looks like this.

```
SmartSCAN NG2
02/11/2022 09:12:21 EST
Main Menu - Comm
----------------------------
[A] - Train Summary
[B] - Train Detail
[C] - Exception Summary
[D] - Exception Detail
[E] - System Status Report
            •
            •
            •
```

2. Select **Train Detail**.

   This prompt appears.

```
Enter Train Number:
```

3. Type the train number.
4. If you typed one or two digits, press **[Enter]**.

   This prompt appears.

```
Abbreviated? (y/n)
```

5. Type **N** to produce an extended Train Detail report.
6. To exit the serial interface and return the SmartScanNG² system to normal operation, type **X**.

6.3 Train Detail Report (Abbreviated)

The abbreviated Train Detail report is like the extended Train Detail report. However, the abbreviated report doesn't display all the recorded axle data. It only displays axle data for:

- The car immediately preceding a car with an alarmed axle.
- The car containing the alarmed axle.
- The car immediately following the car with the alarmed axle.

Like the extended Train Detail report, the abbreviated Train Detail report is divided into three sections. The header section contains general information about the site (like the MP/KP) and some detail information about the specific train (like the train's exit speed) that passed the site. The detail section contains more detailed information (like the car number) about the specific train. In between these two sections is the system events section, which contains all System Alarms and Exception Alarms associated with the train.

```
   ==============================================================================
                           Southern Technologies Corporation
                            Next Generation Detector System
                                      TRAIN DETAIL
                                       ABBREVIATED
   ==============================================================================
   Train#:   5                Axles: 110       Speed (kph)           MP/KP: 1233.8
     Date: 01/01/22            Cars: 23          Min: 78             Track: West
     Time: 07:04           Direction: South       Max: 78       Temperature:  +13C
                       Shutters Open: 31          Avg: 78           Battery: 14.4v
                              Length: 459m       Exit: 78
   ==============================================================================
                       Resistor        Txdr
   Scanner    Max Avg Read Req  CF    Counts     Alarm        Limit  Carside Parms
   -------------------------------   -------    ------------------  -------------
   East  Brng  22  22    0  69B 100   TO1 110    Absolute       180  Slope:   1.31
   West  Brng 174  24    0 149B 100   TO2 110    Differential    75  Minimum:   90
   East  Whl    1   1    0  48B 100              N/E Hot Wheel  500
   West  Whl    4   4    4 141B  97               S/W Hot Wheel  500
                                                  Cold Rail Temp  10
   Resistor Test Mode: Enabled
   ==============================================================================
   Software Version: EX_01-00 2020-10-28
   ==============================================================================
   AEI System Data

   Tags Read          Tags Stored: 45
   --------------
   Antenna 0: 23
   Antenna 1: 22

   ------------------------------------------------------------------------------
   System Alarms

    None

   ------------------------------------------------------------------------------
   Integrity Failures

    None

   ------------------------------------------------------------------------------
   Axle Alarm Summary

   Axle   26 West Rail Differential

   ------------------------------------------------------------------------------
   Announcements made

   " detector at kilometer post 1 2 3 3 point 8 west track "
   " detector at kilometer post 1 2 3 3 point 8 west track you have a defect "
   " detector at kilometer post 1 2 3 3 point 8 west track hot box west rail axle 2 6 total axles 1 1 0 "
   " detector at kilometer post 1 2 3 3 point 8 west track hot box west rail axle 2 6 total axles 1 1 0
detector out "
   ---------------------------------------------------------------------------
                Rail       Wheel
    Car Axle  East  West  East  West   ON    OFF PW1 PW2  Alarms
   ---------------------------------------------------------------------------
      4   19    22    23     1     4   27    114  20  19 UTCX  54589
          20    22    23     1     4   27     49  19  19
          21    22    23     1     4   27    422  20  19
          22    22    23     1     4   27     49  20  19
        Carside Ave: East  22 West  23   Carside Alarms: East 118 West 120

      5   23    22    23     1     4   27    113  20  19 GPFX  10816
          24    22    23     1     4   27     49  20  19
          25    22    23     1     4   27    422  20  19
   B      26    22   174     1     4   27     49  20  19 West Rail Differential
        Carside Ave: East  22 West  23   Carside Alarms: East 118 West 120

      6   27    22    23     1     4   27    113  20  19 SKSX 101060
          28    22    23     1     4   27     49  20  19
          29    22    23     1     4   27    422  20  19
          30    22    23     1     4   27     49  20  19
        Carside Ave: East  22 West  23   Carside Alarms: East 118 West 120
```

Train Detail - Abbreviated

To produce an abbreviated Train Detail report:

1. Using the serial interface, display the Main menu.

   Section 4.0 - Serial Interface tells how to display the Main menu. The Main menu looks like this.

```
SmartSCAN NG2
02/11/2022 09:12:21 EST
Main Menu - Comm
----------------------------
[A] - Train Summary
[B] - Train Detail
[C] - Exception Summary
[D] - Exception Detail
[E] - System Status Report
            •
            •
            •
```

2. Select **Train Detail**.

   This prompt appears.

```
Enter Train Number:
```

3. Type the train number.
4. If you typed one or two digits, press **[Enter]**.

   This prompt appears.

```
Abbreviated? (y/n)
```

5. Type **Y** to produce an abbreviated Train Detail report.
6. To exit the serial interface and return the SmartScanNG² system to normal operation, type **X**.

6.4 Exception Summary Report

The Exception Summary report lists all trains currently stored in the Exceptions directory. (A train is stored in the Exceptions directory if either an Exception Alarm or an Integrity Failure was detected on it as it passed the site.) A train number is shown for each train entry so that an Exception Detail report may easily be produced for any train listed on the summary.

The report is divided into a header section and a detail section. The header section contains general information about the site. The detail section contains summary information on each exception train (that is, on each train having an Exception Alarm, an Integrity Failure, or both) that passed the site.

Below is a sample of part of an Exception Summary report when Hotwheel alarm detection was disabled during report processing and when the AEI subsystem was disabled during train passage. (When the report is run, if the Hotwheel option on the Equipment Settings menu is disabled, the hotwheel information is hidden. When the report is run, if the AEI option is disabled, the tag information isn't hidden.) The contents of your report will be different. The version information in the sample below is for illustrative purposes only. It doesn't represent any real release of the firmware.

```
                        Southern Technologies Corporation
                         Next Generation Detector System
                                EXCEPTION SUMMARY
==============================================================================
Software Version: EX_01-00 2020-10-28                            MP/KP: 1234.5
                                                                 Track: North
Current Alarm Settings
Absolute...... 150   Carside Slope... 1.31
Differential.. 255   Minimum.........  90
N/E Hot Wheel. 500   Cold Rail Temp..  10
S/W Hot Wheel. 500
Total Trains: 20
------------------------------------------------------------------------------
                                                D              Bearing     Bearing
                                                i    Speed     Average     Maximum     Amb
Train# Ref#   Date   Time Cars Axles TO1  TO2 r Min Max Xit East  West  East  West  Temp  Bat
-----------------------------------------------------------------------------------------------
  19 B   19 02/11/22 05:08  67  272  272  272 S   6  30  10   23    21    48    49  +24F 13.0v
  18 B   18 02/11/22 04:13  68  276  276  276 N  24  33  32   15    13    29    30  +27F 13.1v
  17 B   17 02/11/22 03:51  52  332  332  332 N  23  36  36   15    14    35    39  +27F 13.0v
  16 B   16 02/11/22 03:14 131  530  530  530 N   9  29  29    8     5    27    20  +27F 13.0v
  15 B   15 02/11/22 01:26  49  318  318  318 S   7  11   8   17    16    34    31  +27F 13.1v
  14 B   14 02/11/22 00:49  75  304  304  304 S   5  14   9   19    17    36    34  +26F 13.0v
  13 B   13 02/11/22 00:08  85  346  346  346 N  21  32  32   17    16    40    30  +27F 12.9v
              •
              •
              •
```

The table below lists the fields from the header section and the contents of each field.

Heading	Contents of Field
Version Info	The version numbers of the firmware and their release dates, which are in mm/dd/yy format. This firmware resides on the processor modules.
MP/KP	The five-digit milepost/kilometer post of the site. ***Section 4.0 - Serial Interface*** tells how to change this value using the MP/KP submenu.
Track	The track designator of the site. For single-track sites, the value is Single. For double-track sites, valid values are North, South, East, West, Main 1, Main 2, Main 3, and Middle. ***Section 4.0 - Serial Interface*** tells how to set this value using the Track Number submenu of the Setup menu.
Alarm Limits	The alarm parameters currently defined in the system setup. These values were in place at the time this report was run. • The value after Absolute is set by the Absolute option on the Alarm Settings menu. • The value after Differential is set by the Differential option on the Alarm Settings menu. • The heading Hot Wheel only appears when the Hotwheel option on the Equipment Settings menu is enabled. The value after Hot Wheel is set by the Hotwheel option on the Alarm Settings menu. • The value after Carside Slope is set by the Carside Slope option on the Alarm Settings menu. • The value after Minimum is set by the Carside Minimum option on the Alarm Settings menu. • The value after Cold Rail Temp is set by the Cold Rail Temperature option on the Alarm Settings menu. ***Section 4.0 - Serial Interface*** tells how to set these values.
Total Trains	The total number of trains visiting the site since the Trains directory was last cleared.

The table below lists the fields from the detail section and the contents of each field.

Heading	Contents of Field
Train#	The number that identifies the train in the Exceptions directory.
	There is one unlabeled column between those labeled "Train#" and "Date." This column can contain **A**, **B**, **I**, **S**, or nothing. If "A," an Exception Alarm was detected on the train. If "I," an Integrity Failure was detected. If "B," both an Exception Alarm and an Integrity Failure were detected. If "S," a System Alarm was detected, but Exception Alarms and Integrity Failures weren't. If blank, no Exception Alarm, Integrity Failure, or System Alarm was detected.
Date	The date the train arrived at the site. Date is in mm/dd/yy format. ***Section 4.0 - Serial Interface*** tells how to change this value using the Date and Time submenu of the Setup menu.
Time	The time the train arrived at the site. Time is in 24-hour hh:mm format, where 8 a.m. is 08:00, noon is 12:00, 8 p.m. is 20:00, and midnight is 00:00. ***Section 4.0 - Serial Interface*** tells how to change this value using the Date and Time submenu of the Setup menu.
Cars	The total number of cars counted by the SmartScanNG² system.
Axles	The total number of axles counted by the SmartScanNG² system.
TO1	The total number of hits counted by gating transducer TO1. TO1 is the first gating transducer going north or east from the bearing scanner. It is the gating transducer closest to the bearing scanner.
TO2	The total number of hits counted by gating transducer TO2. TO2 is the second gating transducer going north or east from the bearing scanner. It is the gating transducer farthest from the bearing scanner.
AEI Tags	The total number of AEI tags stored. The number of tag pairs found plus those single tags that lack a match. This heading always appears, even if the AEI subsystem is disabled using the AEI option on the Equipment Settings menu.
Speed (kph)	The train's exit speed in Kilometers per hour.
Dir	The direction the train was traveling. Valid values are N, S, E, and W.
Bearing Average	Under this heading are two columns, one for each bearing scanner, containing the average temperature read by the bearing scanners. If the track orientation is east and west, the bearing scanners are labeled north and south. If the track orientation is north and south, they are labeled east and west.
Wheel Maximum	Under this heading are two columns, one for each wheel scanner, containing the maximum temperature read by the wheel scanners. If the track orientation is east and west, the wheel scanners are labeled north and south. If the track orientation is north and south, they are labeled east and west. This field appears only when the Hotwheel option on the Equipment Settings menu is enabled.
Amb Temp	The ambient temperature, in degrees Fahrenheit, at the time the train arrived at the site.
Bat	The system battery voltage at the time the train passed the site.

To produce an Exception Summary report:

1. Using the serial interface, display the Main menu.

   Section 4.0 - Serial Interface tells how to display the Main menu. The Main menu looks like this.

```
SmartSCAN NG2
02/11/2022 09:18:44 EST
Main Menu - Comm
----------------------------
[A] - Train Summary
[B] - Train Detail
[C] - Exception Summary
[D] - Exception Detail
[E] - System Status Report
            .
            .
            .
```

2. Select the **Exception Summary** report.
3. To exit the serial interface and return the SmartScanNG² system to normal operation, type **X**.

6.5 Exception Detail Report

The Exception Detail report provides detailed information on a single train. When choosing this report, you'll be prompted for a train number. When prompted, enter a train number from the Exception Summary report. The train number appears under the column titled "Train#" in the detail section of the Exception Summary report.

Carside Slope alarm detection is enabled/disabled using the Carside Slope option on the Equipment Settings menu. Hotwheel alarm reporting is enabled/disabled using the Hotwheel option on the Equipment Settings menu. The AEI subsystem is enabled/disabled using the AEI option on the Equipment Settings menu.

Where wheel scanners are properly installed, wheel temperatures are always recorded, even if the Hotwheel option is disabled. On the other hand, if the AEI option is disabled during train passage, no AEI information is recorded. If the Carside Slope option is disabled during train passage, no Carside Slope alarms are generated. But, if it is enabled at the time a report is requested, a carside-slope alarm-limit line is generated for each car of the train.

Below is a sample of part of an Exception Detail report when both the Hotwheel option and Carside Slope option were enabled at the time the report was requested. The AEI option was disabled. The contents of your report will be different. The version information in the sample below is for illustrative purposes only. It doesn't represent any real release of the firmware.

```
                        Southern Technologies Corporation
                         Next Generation Detector System
                                EXCEPTION DETAIL
==============================================================================
Train#:   5                Axles: 110       Speed (kph)           MP/KP: 1233.8
  Date: 01/01/22            Cars: 23          Min: 78             Track: West
  Time: 07:04          Direction: South       Max: 78       Temperature:  +13C
                   Shutters Open: 31          Avg: 78           Battery: 14.4v
                          Length: 459m       Exit: 78
==============================================================================
                    Resistor        Txdr
Scanner    Max Avg Read Req  CF    Counts     Alarm        Limit  Carside Parms
--------------------------------   -------    ------------------  -------------
East  Brng  22  22    0  69B 100   TO1 110    Absolute       180  Slope:   1.31
West  Brng 174  24    0 149B 100   TO2 110    Differential    75  Minimum:   90
East  Whl    1   1    0  48B 100              N/E Hot Wheel  500
West  Whl    4   4    4 141B  97              S/W Hot Wheel  500
                                                Cold Rail Temp  10
Resistor Test Mode: Enabled
==============================================================================
Software Version: EX_01-00 2020-10-28
==============================================================================
AEI System Data

Tags Read          Tags Stored: 45
--------------
Antenna 0: 23
Antenna 1: 22

------------------------------------------------------------------------------
System Alarms


 None

------------------------------------------------------------------------------
Integrity Failures

 None

------------------------------------------------------------------------------
Axle Alarm Summary

Axle   26 West Rail Differential
           •
           •
           •
(continued on next page)
```

```
                                        .
                                        .
                                        .
  ---------------------------------------------------------------------------
  Announcements made

  " detector at kilometer post 1 2 3 3 point 8 west track "
  " detector at kilometer post 1 2 3 3 point 8 west track you have a defect "
  " detector at kilometer post 1 2 3 3 point 8 west track hot box west rail axle 2 6 total
axles 1 1 0 "
  " detector at kilometer post 1 2 3 3 point 8 west track hot box west rail axle 2 6 total
axles 1 1 0 detector out "
  ---------------------------------------------------------------------------
               Rail       Wheel
   Car Axle  East  West  East  West   ON    OFF PW1 PW2  Alarms
  ---------------------------------------------------------------------------
     1    1    22    23     1     4   27     70  19  19 CSXT    729
          2    22    23     1     4   27     49  20  19
          3    22    23     1     4   27     49  19  19
          4    22    23     1     4   27    422  20  19
          5    22    23     1     4   27     49  20  19
          6    22    23     1     4   27     49  19  19
        Carside Ave: East  22 West  23   Carside Alarms: East 118 West 120

     2    7    22    23     1     4   27    115  19  19 TBOX 667179
          8    22    23     1     4   27     49  20  19
          9    22    23     1     4   27     49  19  19
         10    22    23     1     4   27    422  20  19
         11    22    23     1     4   27     49  20  19
         12    22    23     1     4   27     49  19  19
        Carside Ave: East  22 West  23   Carside Alarms: East 118 West 120

     3   13    22    23     1     4   27    115  20  19 TBOX 663532
         14    22    23     1     4   27     49  19  19
         15    22    23     1     4   27     49  20  19
         16    22    23     1     4   27    422  20  19
         17    22    23     1     4   27     49  20  19
         18    22    23     1     4   27     49  19  19
        Carside Ave: East  22 West  23   Carside Alarms: East 118 West 120

     4   19    22    23     1     4   27    114  20  19 UTCX  54589
         20    22    23     1     4   27     49  19  19
         21    22    23     1     4   27    422  20  19
         22    22    23     1     4   27     49  20  19
        Carside Ave: East  22 West  23   Carside Alarms: East 118 West 120

     5   23    22    23     1     4   27    113  20  19 GPFX  10816
         24    22    23     1     4   27     49  20  19
         25    22    23     1     4   27    422  20  19
  B      26    22   174     1     4   27     49  20  19 West Rail Differential
        Carside Ave: East  22 West  23   Carside Alarms: East 118 West 120

                                        .
                                        .
                                        .
```

The extended Exception Detail report is divided into three sections. The header section contains general information about the site (like the MP/KP) and some detail information about the specific train (like the train's exit speed) that passed the site. The detail section contains more detailed information (like the car number) about the specific train. In between these two sections is the system-events section, which contains all System Alarms and Exception Alarms associated with the train.

The table below lists the fields from the header section and the contents of each field.

Heading	Contents of Field
Train#	The number that identifies the train in the Exceptions directory.
Date	The date the train arrived at the site. Date is in mm/dd/yy format. ***Section 4.0 - Serial Interface*** tells how to change this value using the Date and Time submenu of the Setup menu.
Time	The time the train arrived at the site. Time is in 24-hour hh:mm format, where 8 a.m. is 08:00, noon is 12:00, 8 p.m. is 20:00, and midnight is 00:00. ***Section 4.0 - Serial Interface*** tells how to change this value using the Date and Time submenu of the Setup menu.
Length	The length of train in feet.
Speed	The train's exit speed in Kilometers per hour.
Axles	The total number of axles counted by the SmartScanNG² system.
Direction	The direction the train was traveling. Valid values are North, South, East, and West.
Shutters Open	The number of seconds it took the train to pass over the site.
MP/KP	The five-digit milepost/kilometer post of the site. ***Section 4.0 - Serial Interface*** tells how to change this value using the MP/KP submenu.
Track	The track designator of the site. For single-track sites, the value is Single. For double-track sites, valid values are North, South, East, West, Main 1, Main 2, Main 3, and Middle. ***Section 4.0 - Serial Interface*** tells how to set this value using the Track Number submenu of the Setup menu.
Temperature	The ambient temperature at the time the train arrived at the site. Temperature is in degrees Fahrenheit.
Battery	The system battery voltage at the time the train passed the site.
Rail	Location of the bearing scanners. If the track orientation is east and west, the bearing scanners are labeled north and south. If the track orientation is north and south, they are labeled east and west
Max	The maximum temperature, above the ambient temperature in degrees Fahrenheit, recorded by the bearing scanner on a given railside. For example, if the ambient temperature (at the time the train arrived at the site) is 77°F (25°C) and the value in this field is 112, the maximum temperature would be 189°F (87.2°C).
Avg	The average temperature, above the ambient temperature in degrees Fahrenheit, calculated from all recorded temperatures from the bearing scanner on a given railside. For example, if the ambient temperature (at the time the train arrived at the site) is 86°F (30°C) and the value in this field is 55, the average temperature would be 141°F (60.6°C).

Heading	Contents of Field
Resistor Read	The scanner resistor temperature (read after train passage), in degrees Fahrenheit, recorded by the bearing scanner on a given railside.
Resistor Req	The resistor temperature, in degrees Fahrenheit, required by the bearing scanner on a given railside to avoid a Cold Resistor alarm. This value was calculated using the amount of time the shutters were open and the Resistor Test Mode option in effect at the time the train exits the site. If the Resistor Test Mode option is disabled, a zero appears in this field.
	One of five uppercase letters follows the Resistor Req temperature. **B** The baseline resistor integrity test method was used for this train. **D** The resistor integrity test (that is, the Resistor Test Mode option) was disabled by the user. **I** The interim resistor integrity test method was used for this train. **T** For this train, the shutters were open for less than 30 seconds. **V** For this train, the battery voltage (measured with the shutters open) was less than 12.5 volts. For **D**, **T**, and **V**, the required resistor heat is set to zero (that is, a zero appears in the Resistor Read field). A **T** or **V** indicates that the integrity test was not performed due to low voltage or insufficient shutter open time, which could result in an invalid resistor integrity test if it was performed.
CF	The percentage difference between the required resistor value and the value that was actually read. For example, if the required resistor temperature is 180 and the actual resistor temperature is 135, the correction factor would be 25% (1 - (135 / 180) = .25), and 25 would appear in this field.
Txdr Counts	The gating transducer designator (either TO1 or TO2) followed by the total number of hits on that transducer.
Alarm Limit	The Hotwheel alarm level; the Hotbox alarm levels for Absolute and Differential; and the Cold Rail Temperature offset. These values were in place at the time the train arrived at the site. • The value after Absolute is set by the Absolute option on the Alarm Settings menu. • The value after Differential is set by the Differential option on the Alarm Settings menu. • The value after Hot Wheel is set by the Hotwheel option on the Alarm Settings menu. • The value after Cold Rail Temp is set by the Cold Rail Temperature option on the Alarm Settings menu. ***Section 4.0 - Serial Interface*** tells how to set these values.

Heading	Contents of Field
Carside Parms	The Carside Slope alarm parameter values that were in place at the time the train arrived at the site. • The value after Carside Slope is set by the Carside Slope option on the Alarm Settings menu. • The value after Minimum is set by the Carside Minimum option on the Alarm Settings menu. ***Section 4.0 - Serial Interface*** tells how to set these values.
Resistor Test Mode	The status of the post-train resistor integrity test at the time the train arrived at the site. Valid values (aka modes) are Enabled, Reduced, and Disabled. ***Section 4.0 - Serial Interface*** tells how to set this value using the Resistor Test Mode option on the Equipment Settings menu.
Wheel	The location of the wheel scanners. If the track orientation is east and west, the wheel scanners are labeled north and south. If the track orientation is north and south, they are labeled east and west. This field only appears when Hotwheel alarm reporting is enabled using the Hotwheel option on the Equipment Settings menu.
Max	The maximum temperature, above the ambient temperature in degrees Fahrenheit, recorded by the wheel scanner on a given railside. This field only appears when Hotwheel alarm reporting is enabled using the Hotwheel option on the Equipment Settings menu.
Avg	The average temperature, above the ambient temperature in degrees Fahrenheit, calculated from all recorded temperatures from the wheel scanner on a given railside. This field only appears when Hotwheel alarm reporting is enabled using the Hotwheel option on the Equipment Settings menu.
Resistor Read	The scanner resistor temperature (read after train passage), in degrees Fahrenheit, recorded by the wheel scanner on a given railside. This field only appears when Hotwheel alarm reporting is enabled using the Hotwheel option on the Equipment Settings menu.
Resistor Req	The resistor temperature, in degrees Fahrenheit, required by the wheel scanner on a given railside to avoid a Cold Wheel Scanner Resistor alarm. This value was calculated using the amount of time the shutters were open and the Resistor Test Mode option in effect at the time the train exits the site. If the Resistor Test Mode option is disabled, a zero appears in this field. This field only appears when Hotwheel alarm reporting is enabled using the Hotwheel option on the Equipment Settings menu.

Heading	Contents of Field
	One of five uppercase letters follows the Resistor Req temperature. **B** The baseline resistor integrity test method was used for this train. **D** The resistor integrity test (that is, the Resistor Test Mode option) was disabled by the user. **I** The interim resistor integrity test method was used for this train. **T** For this train, the shutters were open for less than 30 seconds. **V** For this train, the battery voltage (measured with the shutters open) was less than 12.5 volts. For **D**, **T**, and **V**, the required resistor heat is set to zero (that is, a zero appears in the Resistor Read field). A **T** or **V** indicates that the integrity test was not performed due to low voltage or insufficient shutter open time, which could result in an invalid resistor integrity test if it was performed.
CF	The percentage difference between the required resistor value and the value that was actually read. For example, if the required resistor temperature is 180 and the actual resistor temperature is 135 the correction factor would be 25% (1 - (135 / 180) = .25), and 25 would appear in this field.
AEI System Data	The number of AEI tags read (by antenna0 and antenna1) and the total number of tags stored for the train. Where both tags of a tag pair are operational, each antenna will read one tag of the pair. The total number of tags stored represents the number of tag pairs found plus those single tags that lack a match. This heading and the columns under it appear only when the AEI subsystem is enabled using the AEI option on the Equipment Settings menu.
Firmware Versions	The version numbers of the firmware and their release dates, which are in mm/dd/yy format. This firmware resides on the processor modules.

The table below lists the fields from the system-events section and the contents of each field.

Heading	Contents of Field
System Alarms	Lists any System Alarms and Integrity Failures detected at the time the train passed the site. If none were detected, this header is followed by the word "none." ***Appendix A - System Alarms*** describes the conditions and events that the system flags as System Alarms. ***Appendix B - Integrity Failures*** describes the conditions and events that the system flags as Integrity Failures.
Axle Alarm Summary	Lists each Exception Alarm found on the train and the axle on which it was found. If none were found, this header is followed by the word "none."

The table below lists the fields from the detail section and the contents of each field.

Heading	Contents of Field
Car	The car number as determined by the firmware.
Axle	The axle number.
Trk	The truck number. Each railroad vehicle has two or more trucks (that is, wheel assemblies). The trucks are numbered, starting with 0, and increasing from the beginning of the train to the end. Each axle record is associated with one of these trucks. The axles are assigned the number of the truck with which they've been associated. These assigned truck numbers appear in this field. If the Hotwheel option on the Alarm Settings menu is enabled, this field doesn't appear.
Rail	Under this heading are two columns, one for each bearing scanner, containing the temperature read by the bearing scanners. If the track orientation is east and west, the bearing scanners are labeled north and south. If the track orientation is north and south, they are labeled east and west. If Hotwheel alarm detection is disabled, the word "Rail" doesn't appear, but the two columns do.
Wheel	Under this heading are two columns, one for each wheel scanner, containing the temperature read by the wheel scanners. If the track orientation is east and west, the wheel scanners are labeled north and south. If the track orientation is north and south, they are labeled east and west. This heading and the two columns under it appear only when Hotwheel alarm detection is enabled.
ON	The number of milliseconds a bearing was scanned.
OFF	The number of milliseconds between axles (when no axle was between the gating transducers).
PW1	The recorded width of the pulse generated by gating transducer TO1. There is no fixed value for the pulse widths. Slower trains generate wider pulse widths (that is, they generate larger values) than faster-moving trains.
PW2	The recorded width of the pulse generated by gating transducer TO2. There is no fixed value for the pulse widths. Slower trains generate wider pulse widths (that is, they generate larger values) than faster-moving trains.
Alarms	Any Exception Alarm found on the given axle.

To produce the extended Exception Detail report:

1. Using the serial interface, display the Main menu.

   Section 4.0 - Serial Interface tells how to display the Main menu. The Main menu looks like this.

```
SmartSCAN NG2
02/16/2022 11:27:49 EST
Main Menu - Comm
----------------------------
[A] - Train Summary
[B] - Train Detail
[C] - Exception Summary
[D] - Exception Detail
[E] - System Status Report
[F] - Last Train
            •
            •
            •
```

2. Select **Exception Detail**.

   This prompt appears.

```
Enter Train Number:
```

3. Type the train number.

   If you typed a three-digit invalid train number, the Main menu reappears. If you typed a three-digit valid train number, the prompt below appears.

4. If you typed one or two digits, press **[Enter]**.

   If you typed a three-digit invalid train number, the Main menu reappears. If you typed a three-digit valid train number, this prompt appears.

```
Abbreviated? (y/n)
```

5. To produce the extended Exception Detail report, type **N**.

   If you typed an invalid train number, the Main menu reappears. If the typed train number is valid, a report for that train is produced. The last line of the report reads: "END OF REPORT - Press any key..."

6. To exit the serial interface and return the SmartScanNG² system to normal operation, type **X**.

6.6 Abbreviated Exception Detail Report

The abbreviated Exception Detail report is like the extended Exception Detail report. However, the abbreviated report doesn't display all the recorded axle data. It only displays axle data for:

- The car immediately preceding a car with an alarmed axle.
- The car containing the alarmed axle.
- The car immediately following the car with the alarmed axle.

For example, assume that a train consisted of 3 locomotives and 20 cars, and Exception Alarms were found on cars 3, 10, 15, and 17. The Abbreviated Exception Detail report for this train would only list axle data for cars 2, 3, 4, 9, 10, 11, 14, 15, 16, 17, and 18. These car numbers comprise the alarmed cars themselves and all cars immediately before and immediately after them.

Like the extended Exception Detail report, the abbreviated Exception Detail report is divided into three sections. The header section contains general information about the site (like the MP/KP) and some detail information about the specific train (like the train's exit speed) that passed the site. The detail section contains more detailed information (like the car number) about the specific train. In between these two sections is the system-events section, which contains all System Alarms and Exception Alarms associated with the train.

Below is a sample of part of an abbreviated Exception Detail report when the AEI option, the Carside Slope option, and the Hotwheel option were all enabled at the time the report was requested. The contents of your report will be different.

```
                          Southern Technologies Corporation
                           Next Generation Detector System
                                   EXCEPTION DETAIL
                                      ABBREVIATED
   ==============================================================================
   Train#:   5                Axles: 110       Speed (kph)           MP/KP: 1233.8
     Date: 01/01/22            Cars: 23          Min: 78             Track: West
     Time: 07:04           Direction: South       Max: 78       Temperature:  +13C
                     Shutters Open: 31            Avg: 78           Battery: 14.4v
                            Length: 459m       Exit: 78
   ==============================================================================
                     Resistor        Txdr
   Scanner    Max Avg Read Req  CF    Counts     Alarm        Limit  Carside Parms
   --------------------------------   -------    ------------------  -------------
   East  Brng  22  22    0  69B 100   TO1 110    Absolute       180  Slope:   1.31
   West  Brng 174  24    0 149B 100   TO2 110    Differential    75  Minimum:   90
   East  Whl    1   1    0  48B 100              N/E Hot Wheel  500
   West  Whl    4   4    4 141B  97              S/W Hot Wheel  500
                                                  Cold Rail Temp  10
   Resistor Test Mode: Enabled
   ==============================================================================
   Software Version: EX_01-00 2020-10-28
   ==============================================================================
   AEI System Data

   Tags Read          Tags Stored: 45
   --------------
   Antenna 0: 23
   Antenna 1: 22

   ------------------------------------------------------------------------------
   System Alarms

    None

   ------------------------------------------------------------------------------
   Integrity Failures

    None

   ------------------------------------------------------------------------------
   Axle Alarm Summary

   Axle   26 West Rail Differential

   ------------------------------------------------------------------------------
   Announcements made

   " detector at kilometer post 1 2 3 3 point 8 west track "
   " detector at kilometer post 1 2 3 3 point 8 west track you have a defect "
   " detector at kilometer post 1 2 3 3 point 8 west track hot box west rail axle 2 6 total axles 1 1 0 "
   " detector at kilometer post 1 2 3 3 point 8 west track hot box west rail axle 2 6 total axles 1 1 0
detector out "
   ---------------------------------------------------------------------------
                Rail       Wheel
    Car Axle  East  West  East  West   ON    OFF PW1 PW2  Alarms
   ---------------------------------------------------------------------------
      4   19    22    23     1     4   27    114  20  19 UTCX  54589
          20    22    23     1     4   27     49  19  19
          21    22    23     1     4   27    422  20  19
          22    22    23     1     4   27     49  20  19
        Carside Ave: East  22 West  23   Carside Alarms: East 118 West 120

      5   23    22    23     1     4   27    113  20  19 GPFX  10816
          24    22    23     1     4   27     49  20  19
          25    22    23     1     4   27    422  20  19
   B      26    22   174     1     4   27     49  20  19 West Rail Differential
        Carside Ave: East  22 West  23   Carside Alarms: East 118 West 120

      6   27    22    23     1     4   27    113  20  19 SKSX 101060
          28    22    23     1     4   27     49  20  19
          29    22    23     1     4   27    422  20  19
          30    22    23     1     4   27     49  20  19
        Carside Ave: East  22 West  23   Carside Alarms: East 118 West 120
```

To produce the abbreviated Exception Detail report:

1 Using the serial interface, display the Main menu.

Section 4.0 - Serial Interface tells how to display the Main menu. The Main menu looks like this.

```
SmartSCAN NG2
02/16/2022 11:27:49 EST
Main Menu - Comm
----------------------------
[A] - Train Summary
[B] - Train Detail
[C] - Exception Summary
[D] - Exception Detail
[E] - System Status Report
[F] - Last Train
            •
            •
            •
```

2 Select **Exception Detail**.

This prompt appears.

```
Enter Train Number:
```

3 Type the train number.

If you typed a three-digit invalid train number, the Main menu reappears. If you typed a three-digit valid train number, the prompt below appears.

4 If you typed one or two digits, press **[Enter]**.

If you typed a three-digit invalid train number, the Main menu reappears. If you typed a three-digit valid train number, this prompt appears.

```
Abbreviated? (y/n)
```

5 To produce the abbreviated Exception Detail report, type **Y**.

If you typed an invalid train number, the Main menu reappears. If the typed train number is valid, a report for that train is produced. The last line of the report reads: "END OF REPORT - Press any key..."

6 To exit the serial interface and return the SmartScanNG² system to normal operation, type **X**.

6.7 Last Train Report

The Last Train report is identical to the Train Detail report, except for this report, you don't specify a train. A report on the most current train is produced.

To produce a Last Train report:

1 Using the serial interface, display the Main menu.

Section 4.0 - Serial Interface tells how to display the Main menu. The Main menu looks like this.

```
            .
            .
            .
  [D] - Exception Detail
  [E] - System Status Report
  [F] - Last Train
  [G] - Train DSRs
  [H] - AEI Diagnostic
            .
            .
            .
```

2 Select Last Train to produce the report.

This prompt appears.

```
  Abbreviated? (y/n)
```

3 To produce the abbreviated Last Train report, type Y. To produce an extended Last Train report, type **N**.

4 To exit the serial interface and return the SmartScanNG² system to normal operation, type **X**.

6.8 System Status Report

The System Status report contains the system's current setup configuration. Once a SmartScanNG² system is set up properly, print this report. Then, keep it in the wayside enclosure for future reference. Should you ever need to set up the system again, you'll have most of the information you'll need on this report.

Below is a sample of the top half of a System Status report. The contents of your report will be different.

```
                                Southern Technologies Corporation
                                 Next Generation Detector System
                                      SYSTEM STATUS REPORT
==============================================================================================
            Date:01/07/22  Time:13:32       Battery: 14.7v        Ambient Temp.: +76F
----------------------------------------------------------------------------------------------
 SICM Board Rev........................... 1.3     MP/KP................................ 1233.8
 Track.................................. West     Track Dir............................... N/S
 AC Power................................ On

 Software Version
----------------------------------------------------------------------------------------------
 EX_01-00 2020-10-28

 Speech Version
----------------------------------------------------------------------------------------------
 0. EXP_EN_01
 1. EXP_FR_01

 Alarm Settings
 ---------------------------------------------------------------------------------------------
 Absolute................................ 150     Differential............................. 255
 Hot Wheel ..............................600     Cold Rails............................... 3
 Cold Rail Temp........................... 10     Cold Res Counter......................... 3
 Differential Enabled..................... No

 Alarm Settings (Advanced)
 ---------------------------------------------------------------------------------------------
 Carside Slope........................... 1.31     Carside Minimum.......................... 90
 Res Test: Minimum Rail Avg............... 25     Res Test: Minimum Wheel Avg............... 28
 Bearing DSR Capture Temp................. 72     Wheel DSR Capture Temp................... 361
 Max Alarms............................... 8

 Equipment Settings
 ---------------------------------------------------------------------------------------------
 Dragger................................. Yes     Hot Wheel................................ No
 Hot Bearing............................. Yes     High Load................................ No
 Wide Load............................... No     AEI...................................... No
 Presence Hardware....................... Yes     Advance Transducers...................... No
 AC Power Off Monitor.................... Yes

 Equipment Settings (Advanced)
 ---------------------------------------------------------------------------------------------
 Carside Slope........................... Yes     Winter Cycle........................ Disabled
 Gate Distance....................... 24.0 in     Dragger Debounce Time................. 200 ms
 Pre Train Dragger Dist................. 0 ft     Pre Train High/Wide Dist................ 0 ft
 Presence Timeout Period............... 10 sec     System Voltage......................... 12 V
 Resistor Test....................... Enabled     Clearance Mode................... Multiplexed
 Clearance Type................... Light Beam     Transducer Gain...................... Normal
 Transducer Type.................... Magnetic     Car Breakout Ratio...................... 1.19
                              •
                              •
                              •
```

Below is a sample of the bottom half of a System Status report. The contents of your report will be different. The version information in the sample below is for illustrative purposes only. It doesn't represent any real release of the firmware.

```
                          .
                          .
                          .
Message Settings
-----------------------------------------------------------------------------------------------
Arrival Message........................... No     Customer Name............................ Yes
Axles..................................... No     Speed.................................... No
Temperature............................... No     Slow..................................... No
Power Off................................. No     Repeat No Defects........................ No
Length.................................... No     Cars Count............................... No

Lft/Rt Alarm Ref.......................... No     Car ID With Alarm........................ No
Integrity Failure....................... Yes     No Defects............................... Yes

Message Settings (Advanced)
-----------------------------------------------------------------------------------------------
Announce Hot Wheels...................... Yes     Announce High/Wide....................... Yes
Request EOT Timer..................... 10 min     Rebroad DTMF Code.........................
Num EOT Repeats........................... 0     EOT Repeat Delay....................... 5 sec

Network Settings
-----------------------------------------------------------------------------------------------
Use Static Address........................ No     Static IP..................... 192.168.13.111
Static Mask................... 255.255.255.0     Default Gateway............... 192.168.13.100
DNS Server...................... 192.168.1.1     TELNET Port............................... 23
FTP Port................................. 21     HTTP Port................................. 80
HTTPS Port............................. 8080     Use Wifi................................... No
Wifi Inactivity Timeout............... 10 min

Port Settings
-----------------------------------------------------------------------------------------------
COM1........................ Baud 19200 NA/NA     COM2........................ Baud 19200 NA/NA
COM3........................ Baud 19200 NA/NA     COM4........................ Baud 19200 NA/NA
COM5........................ Baud 19200 NA/NA     COM6........................ Baud 57600 NA/NA
RS485....................... Baud 9600 NA/NA     Page Lines................................ 30

AEI Settings
-----------------------------------------------------------------------------------------------
Tag Reader Type......................... None     ID Separation............................... 2
Consecutive Reads........................... 2     RF Frequency (MHz)................... 915.000
RF Attenuation (dB)......................... 0     Multi-Track Tag Filter............... Disabled

Units Of Measure Settings
-----------------------------------------------------------------------------------------------
Location....................... Kilometerpost     Date Format........................... Metric
Speed................................ Metric     Temperature........................... Metric
Length............................... Metric

Scanner Calibration Date / Digital Potentiometer Settings
-----------------------------------------------------------------------------------------------
Rail 1  Type III....................... Valid     Rail 2  Type III....................... Valid
Wheel 1 Type III....................... Valid     Wheel 2 Type III....................... Valid

Resistor Baseline
-----------------------------------------------------------------------------------------------
Rail 1  Type III..................... Invalid     Rail 2  Type III....................... Valid

Registered STC Site Status Servers
-----------------------------------------------------------------------------------------------
Server 1................... 10.14.22.54:9876     Most Recent Poll 1........ 06/10/120 13:32:54
```

The table below lists the fields on the System Status report and the contents of each field.

Heading	Contents of Field
Date	The date at the time this report was generated. Date is in mm/dd/yy format. ***Section 4.0 - Serial Interface*** tells how to change this value using the Date and Time submenu of the Setup menu.
Time	The time at the time this report was generated. Time is in 24-hour hh:mm format, where 8 a.m. is 08:00, noon is 12:00, 8 p.m. is 20:00, and midnight is 00:00. ***Section 4.0 - Serial Interface*** tells how to change this value using the Date and Time submenu of the Setup menu.
Battery	The system battery voltage at the time this report was generated.
Ambient Temp	The ambient temperature at the time this report was generated. Temperature is in degrees Fahrenheit.
SICM Bd Rev	The board revision of the 2300-110 SICM Board currently installed in the controller module.
MP/KP	The five-digit milepost/kilometer post of the site. ***Section 4.0 - Serial Interface*** tells how to change this value using the MP/KP submenu.
Track	The track designator of the site. For single-track sites, the value is Single. For double-track sites, valid values are North, South, East, West, Track 1, Track 2, Track 3, and Track 4. ***Section 4.0 - Serial Interface*** tells how to change this value using the Track Number submenu of the Setup menu.
Track Dir	The track direction of the site. Valid values are N/S (for north/south) and E/W (for east/west). ***Section 4.0 - Serial Interface*** tells how to change this value using the Track Number submenu of the Setup menu.
AC Power	Indicates current status of AC Power.
Firmware Versions	The version numbers of the firmware and their release dates, which are in mm/dd/yy format. This firmware resides on the processor modules.
Alarm Settings	The alarm parameters and limits as they are currently defined in the system setup. ***Section 4.0 - Serial Interface*** tells how to change these parameters and limits using the Alarm Settings menu of the Setup menu.
Equipment Settings	Equipment configuration as currently defined in the system setup. ***Section 4.0 - Serial Interface*** tells how to change this configuration using the Equipment Settings menu of the Setup menu.
Messages	Message configuration as currently defined in the system setup. ***Section 4.0 - Serial Interface*** tells how to change this configuration using the Messages menu of the Setup menu.
Network Settings	Network configuration as currently defined in the system setup. **Section 4.0 - Serial Interface** tells how to change this configuration using the Network menu of the Setup menu.

Heading	Contents of Field
Port Settings	Communications port parameter settings as currently defined in system setup. These parameters reflect the baud rate and parity settings for each communications port. ***Section 4.0 - Serial Interface*** tells how to change these parameter settings using the Setup menu.
AEI Reader Parameters	This heading appears when the AEI subsystem is enabled using the AEI option on the Equipment Settings menu and displays settings as they are currently configured. ***Section 4.0 - Serial Interface*** tells how to set these values using the AEI Reader Parameters menu of the Setup menu.
Units of Measure	Units of Measure settings as currently defined in system setup. ***Section 4.0 - Serial Interface*** tells how to change these parameter settings using the Setup menu.
Scanner Calibration Date	Date and time each scanner was last calibrated. The autocalibration function maintains these fields.
Resistor Baseline	VALID indicates the scanner has passed the resistor temperature baseline test. INVALID indicates that the system has tried twice and could not acquire valid resistor data.
Registered Status Servers	IP address and timestamp of last communication for each registered server to which the detector reports.

To produce a System Status report:

1. Using the serial interface, display the Main menu.

   Section 4.0 - Serial Interface tells how to display the Main menu. The Main menu looks like this.

```
SmartSCAN NG2
02/11/2022 11:06:13 EST
Main Menu - Comm
----------------------------
[A] - Train Summary
[B] - Train Detail
[C] - Exception Summary
[D] - Exception Detail
[E] - System Status Report
[F] - Last Train
            •
            •
            •
```

2. Select **System Status**.
3. After producing the report, you are returned to the Main menu.

   At this time, you can produce another report by selecting the appropriate option.
4. When done, close the LOG file.
5. To exit the serial interface and return the SmartScanNG² system to normal operation, type **X**.

6.9 AEI Diagnostic Detail Report

The AEI Diagnostic Detail report provides detailed information on a single train. It contains information that can be useful in troubleshooting AEI related problems. When choosing this report, you'll be prompted for a train number. When prompted, type a train number from the Train Summary report. The train number appears under the column titled "Train#" in the detail section of that report.

The AEI subsystem is enabled/disabled using the AEI option on the Equipment Settings menu. If the AEI option is disabled during train passage, no AEI information is recorded.

Below is a sample of part of an AEI Diagnostic Detail report when both the AEI option and the Hotwheel option on the Equipment Settings menu were enabled at the time the report was requested. The Carside Slope option on the Equipment Settings menu was disabled. Also, both the AEI and Hotwheel options were enabled while the specified train was passing the site. The contents of your report will be different. The version information in the sample below is for illustrative purposes only. It doesn't represent any real release of the firmware.

Like the Train Detail report, the AEI Diagnostic Detail report is divided into three sections. The header section contains general information about the site (like the MP/KP) and some detailed information about the specific train (like the train's exit speed) that passed the site. The detail section contains more detailed information (like the car number) about the specific train. In between these two sections is the system-events section, which contains all System Alarms and Exception Alarms associated with the train.

```
                        Southern Technologies Corporation
                         Next Generation Detector System
                                 AEI Diagnostic
==============================================================================
Train#: 246                  Speed:  30MPH                 MP/KP: 1234.5
  Date: 01/05/22             Axles: 148                    Track: North
  Time: 06:08            Direction: North            Temperature:  +25F
Length:  2357        Shutters Open:   71                Battery: 13.1v
                                                 Car Breakout Ratio: 1.19
==============================================================================
                 Resistor
Rail  Max  Avg  Read  Req  CF   Txdr Counts  Alarm        Limit   Carside Parms
-----------------------------   -----------  ------------------   -------------
East   33   20   172  121B  0   TO1     148  Absolute       200   Slope:   1.60
West   29   13   179  143B  0   TO2     148  Differential   130   Minimum:  300
Resistor Test Mode:             Disabled     Hot Wheel      652
High/Wide Alarm Direction:      BOTH         Cold Rail Temp  10

                 Resistor
Wheel Max  Avg  Read  Req  CF
-----------------------------
East   28    2    26    0B  0
West   23    1    32    0B  0
==============================================================================
AEI System Data

Tags Read          Tags Stored: 74
--------------
Antenna 0: 37
Antenna 1: 37

==============================================================================
Software Version    Package: QCM_00-74 2020-01-04  15-38-51
------------------------------------------------------------------------------

System Alarms
----------------------------------------
 None
-------------------------------------------------------------------------------
TMSTMP  Axle Truck  On  Off  PW1 PW2
00000 CarStart=1, Axles=4, Trucks=2, Tags=1, Speed=23, Len=59
00026      1    1   58    0  19 19
00285      2    1   59  203  12 10

00945   *QCM  6113 side=L trk=2 len=59 axls=4 51|5|0|2 hs0= 0 hs1=13 flags=181
01030      3    2   58  685  20 20
01294      4    2   58  205  15 14
01535 CarEnd=  1


01536 CarStart=2, Axles=4, Trucks=2, Tags=2, Speed=23, Len=59
01776      5    3   58  423  23 22
01974   *QCM  2792 side=L trk=3 len=59 axls=4 51|5|0|2 hs0=19 hs1=12 flags=51
02040      6    3   58  205  20 19

02715    QCM  2792 side=R trk=4 len=59 axls=4 51|5|0|2 hs0=19 hs1=12 flags=A2
02778      7    4   58  679  24 23
03043      8    4   58  206  23 22
03220 CarEnd=  2


03221 CarStart=3, Axles=4, Trucks=2, Tags=2, Speed=23, Len=63
03396      9    5   58  293  20 20
03550   *DAKX252215 side=R trk=5 len=58 axls=4 51|19|0|4 hs0=23 hs1=20 flags=51
03567     10    5   58  113  22 21

              .
              .
              .
```

The table below lists the fields from the header section and the contents of each field.

Heading	Contents of Field
Train#	The number that identifies the train in the Trains directory.
Date	The date the train arrived at the site. Date is in mm/dd/yy format. ***Section 4.0 - Serial Interface*** tells how to change this value using the Date and Time submenu of the Setup menu.
Time	The time the train arrived at the site. Time is in 24-hour hh:mm format, where 8 a.m. is 08:00, noon is 12:00, 8 p.m. is 20:00, and midnight is 00:00. ***Section 4.0 - Serial Interface*** tells how to change this value using the Date and Time submenu of the Setup menu.
Length	The length of train in feet.
Speed	The train's exit speed in Kilometers per hour.
Axles	The total number of axles counted by the SmartScanNG² system.
Direction	The direction the train was traveling. Valid values are North, South, East, and West.
Shutters Open	The number of seconds it took the train to pass over the site.
MP/KP	The five-digit milepost/kilometer post of the site. ***Section 4.0 - Serial Interface*** tells how to change this value using the MP/KP submenu.
Track	The track designator of the site. For single-track sites, the value is Single. For double-track sites, valid values are North, South, East, West, Main 1, Main 2, Main 3, and Middle. ***Section 4.0 - Serial Interface*** tells how to set this value using the Track Number submenu of the Setup menu.
Temperature	The ambient temperature at the time the train arrived at the site. Temperature is in degrees Fahrenheit.
Battery	The system battery voltage at the time the train passed the site.
Rail	Location of the bearing scanners. If the track orientation is east and west, the bearing scanners are labeled north and south. If the track orientation is north and south, they are labeled east and west
Max	The maximum temperature, above the ambient temperature in degrees Fahrenheit, recorded by the bearing scanner on a given railside. For example, if the ambient temperature (at the time the train arrived at the site) is 77°F (25°C) and the value in this field is 112, the maximum temperature would be 189°F (87.2°C).
Avg	The average temperature, above the ambient temperature in degrees Fahrenheit, calculated from all recorded temperatures from the bearing scanner on a given railside. For example, if the ambient temperature (at the time the train arrived at the site) is 86°F (30°C) and the value in this field is 55, the average temperature would be 141°F (60.6°C).

Heading	Contents of Field
Resistor Read	The scanner resistor temperature (read after train passage), in degrees Fahrenheit, recorded by the bearing scanner on a given railside.
Resistor Req	The resistor temperature, in degrees Fahrenheit, required by the bearing scanner on a given railside to avoid a Cold Resistor alarm. This value was calculated using the amount of time the shutters were open and the Resistor Test Mode option in effect at the time the train exits the site. If the Resistor Test Mode option is disabled, a zero appears in this field.
	One of five uppercase letters follows the Resistor Req temperature. **B** The baseline resistor integrity test method was used for this train. **D** The resistor integrity test (that is, the Resistor Test Mode option) was disabled by the user. **I** The interim resistor integrity test method was used for this train. **T** For this train, the shutters were open for less than 30 seconds. **V** For this train, the battery voltage (measured with the shutters open) was less than 12.5 volts. For **D**, **T**, and **V**, the required resistor heat is set to zero (that is, a zero appears in the Resistor Read field). A **T** or **V** indicates that the integrity test was not performed due to low voltage or insufficient shutter open time, which could result in an invalid resistor integrity test if it was performed.
CF	The percentage difference between the required resistor value and the value that was actually read. For example, if the required resistor temperature is 180 and the actual resistor temperature is 135, the correction factor would be 25% (1 - (135 / 180) = .25), and 25 would appear in this field.
Txdr Counts	The gating transducer designator (either TO1 or TO2) followed by the total number of hits on that transducer.
Alarm Limit	The Hotwheel alarm level, the Hotbox alarm levels for Absolute and Differential, and the Cold Rail Temperature offset. These values were in place at the time the train arrived at the site. • The value after Absolute is set by the Absolute option on the Alarm Settings menu. • The value after Differential is set by the Differential option on the Alarm Settings menu. • The value after Hot Wheel is set by the Hotwheel option on the Alarm Settings menu. • The value after Cold Rail Temp is set by the Cold Rail Temperature option on the Alarm Settings menu. ***Section 4.0 - Serial Interface*** tells how to set these values.

Heading	Contents of Field
Carside Parms	The Carside Slope alarm parameter values that were in place at the time the train arrived at the site. • The value after Carside Slope is set by the Carside Slope option on the Alarm Settings menu. • The value after Minimum is set by the Carside Minimum option on the Alarm Settings menu. ***Section 4.0 - Serial Interface*** tells how to set these values.
Resistor Test Mode	The status of the post-train resistor integrity test at the time the train arrived at the site. Valid values (aka modes) are Enabled, Reduced, and Disabled. ***Section 4.0 - Serial Interface*** tells how to set this value using the Resistor Test Mode option on the Equipment Settings menu.
Wheel	The location of the wheel scanners. If the track orientation is east and west, the wheel scanners are labeled north and south. If the track orientation is north and south, they are labeled east and west. This field only appears when Hotwheel alarm reporting is enabled using the Hotwheel option on the Equipment Settings menu.
Max	The maximum temperature, above the ambient temperature in degrees Fahrenheit, recorded by the wheel scanner on a given railside. This field only appears when Hotwheel alarm reporting is enabled using the Hotwheel option on the Equipment Settings menu.
Avg	The average temperature, above the ambient temperature in degrees Fahrenheit, calculated from all recorded temperatures from the wheel scanner on a given railside. This field only appears when Hotwheel alarm reporting is enabled using the Hotwheel option on the Equipment Settings menu.
Resistor Read	The scanner resistor temperature (read after train passage), in degrees Fahrenheit, recorded by the wheel scanner on a given railside. This field only appears when Hotwheel alarm reporting is enabled using the Hotwheel option on the Equipment Settings menu.
Resistor Req	The resistor temperature, in degrees Fahrenheit, required by the wheel scanner on a given railside to avoid a Cold Wheel Scanner Resistor alarm. This value was calculated using the amount of time the shutters were open and the Resistor Test Mode option in effect at the time the train exits the site. If the Resistor Test Mode option is disabled, a zero appears in this field. This field only appears when Hotwheel alarm reporting is enabled using the Hotwheel option on the Equipment Settings menu.

Heading	Contents of Field
	One of five uppercase letters follows the Resistor Req temperature. **B** The baseline resistor integrity test method was used for this train. **D** The resistor integrity test (that is, the Resistor Test Mode option) was disabled by the user. **I** The interim resistor integrity test method was used for this train. **T** For this train, the shutters were open for less than 30 seconds. **V** For this train, the battery voltage (measured with the shutters open) was less than 12.5 volts. For **D**, **T**, and **V**, the required resistor heat is set to zero (that is, a zero appears in the Resistor Read field). A **T** or **V** indicates that the integrity test was not performed due to low voltage or insufficient shutter open time, which could result in an invalid resistor integrity test if it was performed.
CF	The percentage difference between the required resistor value and the value that was actually read. For example, if the required resistor temperature is 180 and the actual resistor temperature is 135, the correction factor would be 25% (1 - (135 / 180) = .25), and 25 would appear in this field.
AEI System Data	The number of AEI tags read (by antenna0 and antenna1) and the total number of tags stored for the train. Where both tags of a tag pair are operational, each antenna will read one tag of the pair. The total number of tags stored represents the number of tag pairs found plus those single tags that lack a match. This heading and the columns under it appear only when the AEI subsystem is enabled using the AEI option on the Equipment Settings menu.
Firmware Versions	The version numbers of the firmware and their release dates, which are in mm/dd/yy format. This firmware resides on the processor modules.

The table below lists the fields from the system-events section and the contents of each field.

Heading	Contents of Field
System Alarms	Lists any System Alarms and Integrity Failures detected at the time the train passed the site. If none were detected, this header is followed by the word "none." ***Appendix A - System Alarms*** describes the conditions and events that the system flags as System Alarms. ***Appendix B - Integrity Failures*** describes the conditions and events that the system flags as Integrity Failures.

The following excerpt is from the detail section of the AEI Diagnostic report

```
                •
                •
                •
TMSTMP  Axle Truck  On  Off  PW1 PW2
00000 CarStart=1, Axles=4, Trucks=2, Tags=1, Speed=23, Len=59
00026      1    1   58    0  19 19
00285      2    1   59  203  12 10

00945   QCM  6113 side=L trk=2 len=59 axls=4 51|5|0|2 hs0= 0 hs1=13 flags=181
01030      3    2   58  685  20 20
01294      4    2   58  205  15 14
01535 CarEnd=  1
                •
                •
                •
```

The table below lists the fields from the detail section and the contents of each field.

Heading	Contents of Field
TMSTMP	The timestamp of a recorded event in milliseconds after train detection.
Car	The car number as determined by the firmware.
Axle	The axle number.
Trk	The truck number. Each railroad vehicle has two or more trucks (that is, wheel assemblies). The trucks are numbered, starting with 0, and increasing from the beginning of the train to the end. Each axle record is associated with one of these trucks. The axles are assigned the number of the truck with which they've been associated. These assigned truck numbers appear in this field. If the Hotwheel option on the Equipment Settings menu is enabled, this field doesn't appear.
ON	The number of milliseconds a bearing was scanned.
OFF	The number of milliseconds between axles (when no axle was between the gating transducers).
PW1	The recorded width of the pulse generated by the gating transducer TO1. There is no fixed value for the pulse widths. Slower trains generate wider pulse widths (that is, they generate larger values) than faster-moving trains.
PW2	The recorded width of the pulse generated by the gating transducer TO2. There is no fixed value for the pulse widths. Slower trains generate wider pulse widths (that is, they generate larger values) than faster-moving trains.

The AEI Diagnostic report has one line of data for every AEI tag associated with each car. See highlighted data line in the example below.

```
                •
                •
                •

TMSTMP  Axle Truck  On  Off  PW1 PW2
00000 CarStart=1, Axles=4, Trucks=2, Tags=1, Speed=23, Len=59
00026      1    1   58    0  19 19
00285      2    1   59  203  12 10

00945   QCM  6113 side=L trk=2 len=59 axls=4 51|5|0|2 hs0= 0 hs1=13 flags=181
01030      3    2   58  685  20 20
01294      4    2   58  205  15 14
01535 CarEnd=  1
                •
                •
                •
```

The table below defines the relevant fields in the AEI tag portion of car data.

Field Value	Field Definition
00945	Timestamp of tag read.
QCM 6113	AEI vehicle identification.
side=L	Left side of car.
trk=2	Truck two of car.
len=59	Car length of 59 feet.
axls=4	Four axle car.
51|5|0|2	**51** is the Data Format Code. **5** is the Equipment Group Code (5 = locomotive). **0** is the Platform Code. **2** is the Tag Type.
hs0= 0	Handshakes on antenna-0 equal zero.
hs1=13	Handshakes on antenna-1 equal thirteen.
flags=181	For diagnostic purposes.

To produce an AEI Diagnostic report:

1 Using the serial interface, display the Main menu.

Section 4.0 - Serial Interface tells how to display the Main menu. The Main menu looks like this.

```
              •
              •
              •

  [G] - Train DSRs
  [H] - AEI Diagnostic
  [I] - Setup
  [J] - Event log
              •
              •
              •
```

2 Select **AEI Diagnostic**.

This prompt appears.

```
  Enter Train Number:
```

3 Type the train number.

If you typed a three-digit invalid train number, the Main menu reappears. If you typed a three-digit valid train number, a report for that train is produced. The last line of the report reads: "END OF REPORT - Press any key..."

4 If you typed one or two digits, press **[Enter]**.

If you typed an invalid train number, pressing **[Enter]** causes the Main menu to reappear. If the typed train number is valid, pressing **[Enter]** produces a report for it. The last line of the report reads: "END OF REPORT - Press any key..."

5 To exit the serial interface and return the SmartScanNG² system to normal operation, type **X**.

6.10 Event Log Report

The Event Log report is used for diagnostics. As certain system events occur, entries are posted into the event log. Each time an entry is made into this log, it receives an event number, the date and time that the event was recorded, and an event description.

The entries are stored in a section of SRAM that can hold up to 300 separate entries. Each time an event is recorded which exceeds this maximum, the new one overwrites the oldest recorded event. The entries are saved during a power outage but can be deleted with the Clear Event Log option on the System Functions menu. Producing the report at this time produces a "No Events" message. If events have been recorded and not cleared, they're listed in chronological order, beginning with the most recently recorded event.

Below is a sample of part of an Event Log report. The contents of your report will be different. The date/time at the top of the report is the system date/time at the time the report was generated. Each line of text (that is, each event) contains these fields.

- The date at which the event was recorded (date is in mm/dd/yyyy format)
- The time at which the event was recorded (time is in 24-hour hh:mm:ss format, where 8 a.m. is 08:00:00, noon is 12:00:00, 8 p.m. is 20:00:00, and midnight is 00:00:00)
- The task priority (number in parenthesis –used for diagnostic purposes)
- The event description

```
---------
[02/05/2022 13:05:57] (55) - Admin logged in: id-26, telnet ip-184.174.165.45
[02/05/2022 12:52:42] (48) - Stored train #1113
[02/05/2022 12:52:42] (48) - Train Departure
[02/05/2022 12:52:09] (48) - Train Arrival
[02/05/2022 11:51:36] (55) - Admin logged out: id-26
[02/05/2022 11:48:57] (55) - Admin logged in: id-26, telnet ip-184.174.165.45
[02/05/2022 11:48:39] (55) - Telnet Connection timed out: id-26
[02/05/2022 11:38:08] (55) - Admin logged in: id-26, telnet ip-184.174.165.45
[02/05/2022 11:27:33] (48) - Stored train #1112
[02/05/2022 11:27:24] (48) - Train Departure
[02/05/2022 11:25:08] (48) - Train Arrival
[02/05/2022 10:43:55] (48) - Stored train #1111
[02/05/2022 10:43:44] (48) - Train Departure
[02/05/2022 10:40:27] (48) - Train Arrival
[02/05/2022 10:03:53] (48) - Stored train #1110
[02/05/2022 10:03:43] (48) - Train Departure
[02/05/2022 10:01:12] (48) - Train Arrival
[02/05/2022 09:00:04] (48) - Stored train #1109
[02/05/2022 08:59:55] (48) - Train Departure
[02/05/2022 08:57:50] (48) - Train Arrival
[02/05/2022 08:50:46] (55) - Admin logged out: id-27
[06/05/2022 08:43:45] (55) - Admin logged in: id-27, telnet ip-184.174.165.45
[06/05/2022 08:42:46] (55) - Telnet Connection timed out: id-27
[02/05/2022 08:16:26] (55) - Admin logged in: id-27, telnet ip-184.174.165.45
[02/05/2022 08:12:09] (55) - Telnet Connection timed out: id-27
[02/05/2022 08:00:51] (55) - Admin logged in: id-27, telnet ip-184.174.165.45
                                •
                                •
                                •
```

To produce an Event Log report:

1. Using the serial interface, display the Main menu.

   Section 4.0 - Serial Interface tells how to display the Main menu. The Main menu looks like this.

```
              .
              .
              .
  [G] - Train DSRs
  [H] - AEI Diagnostic
  [I] - Setup
  [J] - Event log
              .
              .
              .
```

2. Select the **Event Log**.
3. To exit the serial interface and return the SmartScanNG² system to normal operation, type **X**.

7.0 Radio Announcements

Radio announcements consist of a set of predefined spoken messages, with each message triggered by a particular event or set of events. This section covers the message formats and announcement criteria.

These shorthand symbols have been used in the message texts.

- (axle) – an axle number
- (Kilometer) – the Kilometerpost number
- (side) – a rail side (such as “North” or “East”)
- (speed) – exit speed of the train (to the nearest mph)
- [track] – at a double-track site, the track direction (such as “North” or “East”); at a single-track site, no message text is inserted for track direction
- (tag) – a railcar’s AEI tag number

7.1 Arrival Messages

The arrival message is used to announce train arrival at the site. This message is optional. It is enabled or disabled using the Announce Train Arrival option on the Messages menu. The format of this announcement is:

```
Detector At Kilometerpost (Kilometer) [track]
```

7.2 Real-Time Messages

Real-time messages consist of announcements that occur as the train is passing over the site. No matter what kind of defect was detected, there is only one format for this announcement, and it is:

```
[Detetor at] Kilometerpost (Kilometer) [track indicator] You have a
defect
```

For example

```
Detector at kilometer post 1 2 3 3 point 8 you have a defect
```

7.3 Post-Train Messages

Post-train announcements are given after the train has left the site, and all the recorded train data has been processed by the SmartScanNG².

These messages consist of three distinct scenarios:

- Exception Alarms not detected and Integrity Failures not detected
- Exception Alarms not detected and Integrity Failures detected
- Exception Alarms detected

Exception Alarms are associated with axles. There are eight types of exception alarms. They are the Absolute, Carside Slope, Differential, Dragging-Equipment, High-Load, Hot Wheel, Pyrometer Saturation, and Wide-Load alarms.

The four types of **Hotbox alarms** (hot bearing alarms) are Absolute alarms, Differential alarms, Pyrometer Saturation alarms, and Carside Slope alarms. When one of these four alarms occurs, a Hotbox alarm is announced.

7.3.1 No Alarms

If no alarms are detected on a train, and no Integrity Failures are flagged, the message below is announced.

The message is:

```
[Detector at] Kilometer Post
(Kilometer) [track]
 No defects, repeat no defects, total axles (axle count)
```

For example, if at a double-track site:

```
Detector at Kilometer Post1 2 3 3 point 8
East Track
No defects, repeat no defects, total axles 8 2
```

7.3.2 Only an Integrity Failure Detected

Integrity failures are caused when the system determines that a condition exists that could prevent proper scanning of a train. They indicate an unusual operating condition that may require maintenance. Integrity failures appear in the header of Train Detail reports and Exception Detail reports.

When no Exception Alarms are detected, but an Integrity Failure is detected, only Integrity Failure is announced. The format of this announcement is:

```
[Detector at] Kilometer Post
(Kilometer) [track indicator]
[ancillary messages]
Integrity Failure

[Detector at] Kilometer post
(Kilometer) [track indicator]
[ancillary messages]
Integrity Failure
Detector Out
```

For example, at a double-track site, the announcement is like this.

```
Detector at Kilometer Post
1 2 3 3 point 8 East Track
Total Axles 8 2
Integrity Failure

Detector at Kilometer Post
1 2 3 3 point 8 East Track
Total Axles 8 2
Integrity Failure
Detector Out
```

7.3.3 Exception Alarms Detected

When one or more Exception Alarms are detected, the alarms are announced. The format of this announcement is:

```
[Detector at] Kilometer Post
(Kilometer) [track indicator]
Hot box (rail) (axle)
[ancillary messages]

[Detector at] Kilometer Post
(Kilometer) [track indicator]
Hot box (rail) (axle)
[ancillary messages]
Detector Out
```

For example, at a double-track site having one Hotbox alarm, the announcement is like this.

```
Detector at Kilometer Post
1 2 3 3 point 8 East track
Hot box West rail axle 2 6
total axles 1 1 0
```

```
Detector at Kilometer Post
1 2 3 3 point 8 East track
Hot box West rail axle 2 6
Total axles 1 1 0
Detector out
```

At a double-track site having one Hotwheel alarm, the announcement is like this.

```
Detector at Kilometer Post
1 2 3 3 point 8 East track
Hot wheel east rail axle 3 9
Total axles 1 1 0
```

```
Detector at Kilometer Post
1 2 3 3 point 8 East track
Hot wheel east rail axle 3 9
Total axles 1 1 0
Detector out
```

At a single-track site having two Hotbox alarms, the announcement is like this.

```
Detector at Kilometer Post
1 2 3 3 point 8
Hot box east rail axle 1 7
Hot box west rail axle 2 6
Total axles 1 1 0

Detector at Kilometer Post
1 2 3 3 point 8
Hot box east rail axle 1 7
Hot box west rail axle 2 6
Total axles 1 1 0
Detector out
```

At a double-track site having one Dragging Equipment alarm, the announcement is like this.

```
Detector at Kilometer Post
1 2 3 3 point 8 East track
Dragging equipment near axle 3 1
Total axles 1 1 0
```

```
Detector at Kilometer Post
1 2 3 3 point 8 East track
Dragging equipment near axle 3 1
Total axles 1 1 0
Detector out
```

At a double-track site having one Hotwheel alarm and one Dragging Equipment alarm, the announcement is like this.

```
Detector at Kilometer Post
1 2 3 3 point 8 East track
Hot wheel west rail axle 4 5
Dragging equipment near axle 5 3
Total axles 1 1 0
```

```
Detector at Kilometer Post
1 2 3 3 point 8 East track
Hot wheel west rail axle 4 5
Dragging equipment near axle 5 3
Total axles 1 1 0
Detector out
```

8.0 Scheduled Maintenance

This section lists the items that STC recommends be done during scheduled maintenance.

An up-and-running SmartScanNG² system needs to be visited from time to time to do scheduled maintenance. The frequency of these visits is up to the customer. STC recommends visits every 30 to 90 days. Maintenance requirements change with environmental conditions. For example, if the system is installed in a damp or dusty environment, it may be necessary to visit the location more frequently to clean the optics. The optical system is the item most likely to need periodic maintenance. If moisture or dust isn't a problem, you may not need to do scheduled maintenance more often than every 90 days.

What is done during a maintenance visit is up to the customer. However, STC does have some recommendations. For normal scheduled maintenance, STC recommends these steps.

1 Be sure that you have on hand a 50-foot (15-meter) or longer tape measure, a #2 Phillips head screwdriver, a small slotted screwdriver, a 9/16-inch torque wrench, a laptop computer, a multimeter, and the alignment fixture.

2 At trackside, check track conditions on all tracks.

3 If any track is pumping (vertical displacement of the rails) or running (lateral displacement of the rails) more than 2 inches (5 centimeters), have it repaired before proceeding.

4 At trackside, check for damaged transducers, damaged transducer cables, and other damaged components.

5 If you find any damaged components, repair or replace them before proceeding.

STC transducers don't require a lot of care and attention. Once installed correctly, you don't need to remove them from the rail for cleaning or readjustment.

6 At trackside, check all transducer-mounting bolts on all tracks to make sure that all transducers are snug against the rail.

Four bolts are needed to hold the transducer in place. Two square-head bolts go through the mounting plate and transducer body. Two hex-head bolts go through the mounting plate and rail. If any of these bolts are sheared or missing, they must be replaced with the correct replacement bolt. Also, if any washers or nuts are missing, they must be replaced.

7 If all transducers aren't snug against the rail, fix this problem before proceeding.

Each installed transducer body should be 1-9/16 inches (3.97 centimeters) below the top of the rail and parallel to it. You can meet this requirement by using the transducer height bracket on the bottom of the alignment fixture.

8 Place the alignment fixture across both rails, centered over each transducer in turn.

9 Check if each transducer body just touches the bracket.

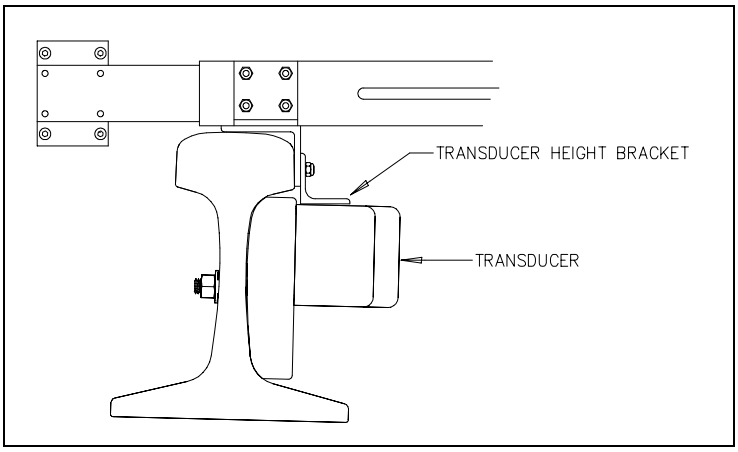

The fixture should be snug against the top and gauge of both rails. This may be impossible if the transducer body is less than 1-9/16 inches (3.97 centimeters) below the top of the rail or if the transducer body isn't parallel to the top of the rail.

10 If a transducer body doesn't just touch the bracket:

a Loosen the nuts holding the transducer body to its mounting plate.

b By sliding it up and down, adjust the transducer body to the proper height.

c Tighten each hex nut with a 9/16-inch torque wrench to a **torque of 12 to 15 foot-pounds (16.3 to 20.3 newton-meters)**.

Don't exceed a torque of 15 foot-pounds (20.3 newton-meters). Doing so can weaken or break a bolt, requiring the bolt to be replaced.

11 At the trackside, check all scanner-mounting bolts on all tracks.

12 If all scanner mounts aren't snug against the gauge side of the rail, fix this problem before proceeding.

13 From under all scanners, remove ballast that could damage the scanner during train passage.

14 Remove all obstructions to the scan path of each scanner.

15 If the wayside enclosure isn't attached to a properly installed outside grounding system, fix this problem before proceeding.

16 At all outlets inside the wayside enclosure, check if the AC power is stable and at least 110 volts at 20 amperes.

17 If the AC power isn't stable or if it isn't at least 110 volts at 20 amperes, fix this problem before proceeding.

18 If not all outlets inside the wayside enclosure are grounded properly, fix this problem before proceeding.

19 If the battery is dead, damaged, or emitting a strong sulfurous odor, replace it before proceeding.

> **WARNING**
>
> In operation, batteries generate and release flammable hydrogen gas, which, if ignited by a burning cigarette, naked flame, or spark, may cause battery explosion with a dispersion of casing fragments and corrosive liquid electrolyte. So, carefully follow the manufacturer's instructions for installation and service. Keep all sources of gas ignition away from the batteries and do not allow metallic articles to contact the negative and positive terminals of a battery at the same time.

> **WARNING**
>
> A damaged or aged battery, in combination with the connected battery charger, can pose a serious health threat. The battery can produce hydrogen sulfide gas, which is characterized by its unique "rotten egg" smell. So, when a strong sulfurous odor is detected, remove power to the battery charger and check the battery for excessive heating. Do not inhale the fumes.

20 If the battery charger hasn't been properly grounded, fix this problem before proceeding.

21 If the SmartScanNG² enclosure hasn't been properly grounded, fix this problem before proceeding.

There are vents on the top, bottom, and sides of the charger. Blocking any of these vents could result in damage to the charger or battery.

22 Remove anything that is blocking the vents on the battery charger.

One end of the battery temperature probe cable has a three-pin plug, which plugs into a receptacle on the front of the battery charger. The other end, which has a temperature sensor sealed in it, should be attached to the negative battery post. If the battery temperature probe is defective or not installed, the red defective LED is lit.

23 On the front of the battery charger, if the red defective-temperature-probe LED is lit, fix the underlying problem before proceeding.

24 Switch the multimeter to the DC volts scale.

The **equipment side** of the fuse block is directly wired to the SmartScanNG² enclosure. The **battery side** of the fuse block is wired to the battery via the distribution block.

25 Touch the leads from the multimeter to the terminals on the equipment side of the fuse block.

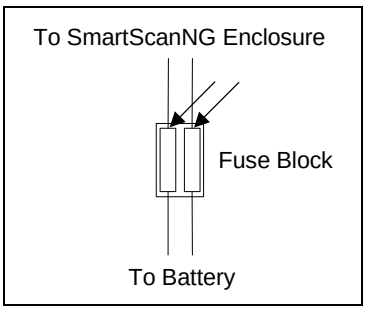

26 If the voltage (on the equipment side of the fuse block) is 12.3 through 14 VDC, go to step **30**.

27 If the voltage (on the equipment side of the fuse block) is 0 VDC:

a Touch the leads to the terminals on the battery side of the fuse block.

b If the voltage (on the battery side of the fuse block) is greater than 0 VDC, replace each fuse in the fuse block with a BAF-25 (25-amp 250-volt) fast-acting fuse and return to step **25**.

c If the voltage (on the battery side of the fuse block) is 0 VDC, fix any wiring problems between the fuse block, the distribution block, the battery, and the charger.

d Return to step **25**.

28 If the voltage is less than 12.3 VDC:

a On the battery charger, check the input voltage switch for proper setting.

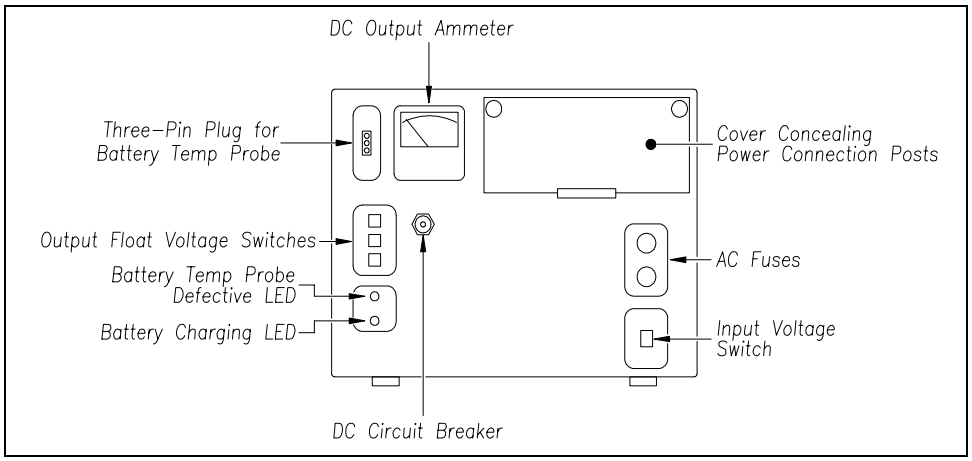

The input voltage switch can be set to 115 VAC or 230 VAC. Use 115 for input voltages between 108 and 128. Use 230 for input voltages between 216 and 256.

b On the battery charger, check the output float voltage switches.

c If the switches are set lower than 12.30 VDC, reset them to 14.00 VDC.

To reset the switches, use a small slotted screwdriver to turn each switch to the desired number. The ten's digit is always 1 and can't be changed. The top switch controls the unit's digit. The middle switch controls the tenth's digit. The bottom switch controls the hundredth's digit. The factory default is **14.00 VDC**, which is the **recommended setting**. To select 14.00 VDC, turn the top switch to 4, the middle switch to 0, and the bottom switch to 0.

d Open the small door cover on the top-right corner of the front of the charger.

Do not touch the uninsulated parts of the wires or the charger's binding posts. Doing so could result in sparks, burns, or electric shock.

e Check that all binding posts nuts are tight and that all wiring is correct.

f On the battery charger, check the AC fuses to see if either is blown.

g If blown, replace with 4-amp 250-volt fast-acting fuses.

h On the battery charger, check the DC circuit breaker to see if it is open (tripped).

When closed, about 0.09 inch (0.23 centimeters) of the breaker's button is seen. When open, the button is popped out, showing about 0.25 inch (0.64 centimeters).

i If open (tripped), push the breaker's button in to reset the DC circuit breaker.

j Check to see if the battery charger is plugged in.

k If the battery charger isn't plugged in, plug it in.

l Check the battery-charging LED.

If the battery is charging properly, the yellow battery-charging LED is lit solid. If one or more of the output float voltage switches are set between numbers, the yellow battery-charging LED flashes.

m If the yellow battery-charging LED is not lit, call STC for help in fixing this problem.

n If the yellow battery-charging LED is lit solid, monitor the voltage for ten minutes.

If the voltage is gradually increasing, the battery is probably charging. After the battery has charged for five hours, the battery voltage should be very near the float voltage setting. If the voltage isn't gradually increasing, the battery is probably not charging. This may indicate that the battery is defective and should be replaced.

29 If the voltage is greater than 14 VDC:

a Check the output float voltage switches on the center-left edge of the battery charger.

b Be sure that each switch is set on a number and not between numbers.

c If the switches are set to 14.00 VDC or less, cut all power to the SmartScanNG² system and call STC for help in fixing this problem.

d If the switches are set higher than 14.00 VDC, reset them to 14.00 VDC and return to step **25**.

To reset the switches, use a small slotted screwdriver to turn each switch to the desired number. The ten's digit is always 1 and can't be changed. The top switch controls the unit's digit. The middle switch controls the tenth's digit. The bottom switch controls the hundredth's digit. The factory default is **14.00 VDC**, which is the **recommended setting**. To select 14.00 VDC, turn the top switch to 4, the middle switch to 0, and the bottom switch to 0.

30 On the display panel, look at the COP-A and COP-B LEDs.

The COP LEDs indicate the condition of the CPUs. If both CPUs are running their programs correctly, their LEDs blink on and off. If a program isn't operating as expected, the LED for the affected CPU is lit solid or isn't lit at all.

31 If either or both of the **COP LEDs** are lit solid or aren't lit at all, call STC for help in fixing this problem.

32 On the display panel, look at the **SYS WARN** LED. If a system warning has been flagged, the SYS WARN LED will be lit, and the Check System Health message will be displayed on the bottom text line of the home screen. The Sys. Health Menu provides a status indicator for the various system health checks.

33 To see if the system is being activated by the gating transducers:

a Produce a Train Detail Report for the last train.

Section 6.0 - Producing Reports tells how to produce this report.

b On the Train Detail report, check under the System Alarms section of the report for the words "No Approach Track."

The No Approach Track alarm indicates that the track circuit (or the advance transducers) failed to signal the presence of a train and that the SmartScanNG² system started from the train passing over the gating transducers.

c If the words "No Approach Track" don't appear, go to step **37**.

34 If your system uses advance transducers, go to step **36**.

35 If your system uses a track circuit:

a Toggle off the DC power switch on the right edge of the SmartScanNG² enclosure.

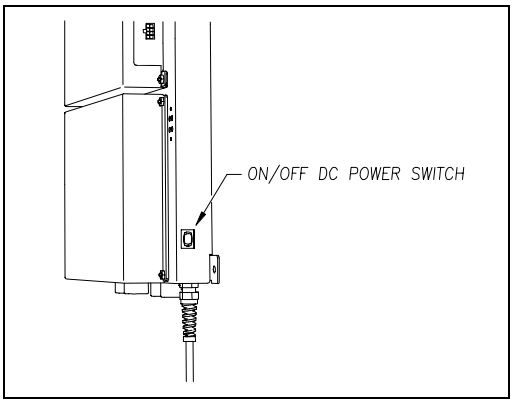

b Unplug the Molex and ribbon cables from the Controller module.

c Remove the four nuts that hold the Controller module to the rest of the SmartScanNG² enclosure.

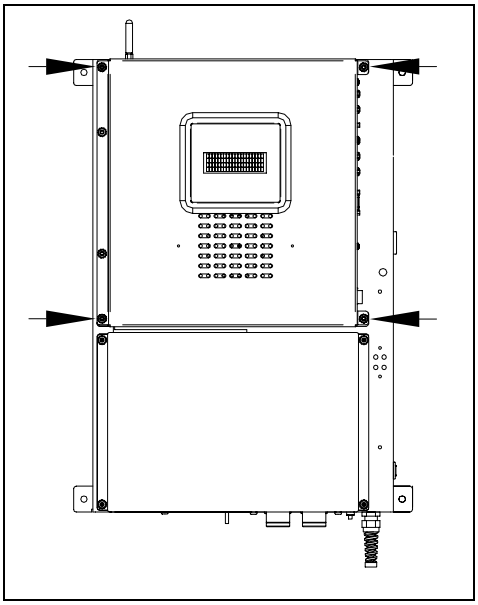

d Detach the Controller module from the rest of the SmartScanNG² enclosure.

The SOTC board and the System-Interconnect board are now visible. On some System-Interconnect boards, the LED is to the right of the ribbon cable connector.

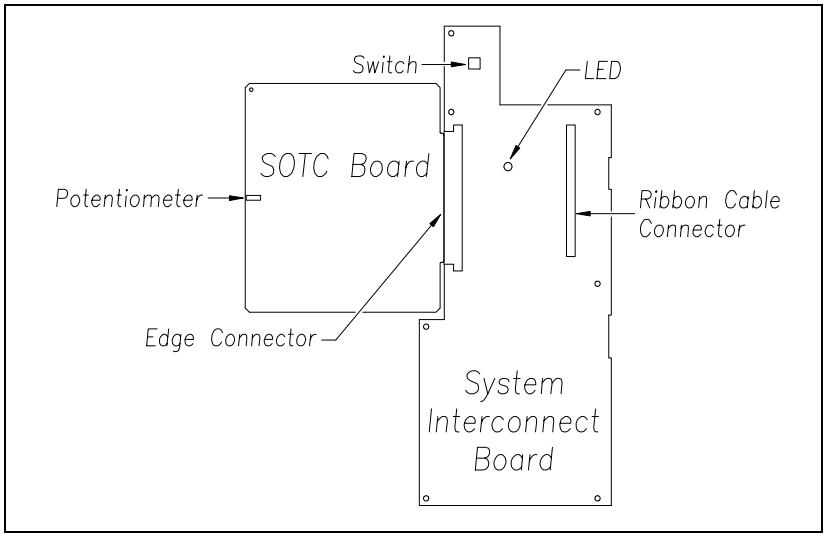

e Store the removed Controller module and nuts in a safe place until you replace them.

f Toggle on the DC power switch on the right edge of the SmartScanNG² enclosure.

g From the center of the gating transducer farthest from the track circuit, measure the shortest distance you want the track circuit to pick up the presence of a train.

The distance must be at least 15 feet (4.6 meters) and no more than 150 feet (45.7 meters).

h At the point just measured, place a hardwire shunt across both rails.

When lit, the LED on the System-Interconnect board indicates a received signal from the track circuit.

i Using a small slotted screwdriver, turn the potentiometer on the SOTC board until the LED on the System-Interconnect board goes out.

The potentiometer can be reached through a hole in the side of the SmartScanNG² enclosure.

j Using a small slotted screwdriver, turn the potentiometer on the SOTC board until the SOTC relay just picks up the signal from the track circuit.

The relay just picks up the signal when the LED on the System-Interconnect board first lights.

k Remove the hardwire shunt.

l Place the hardwire shunt across both rails at the point 5 feet (1.5 meters) beyond the measured point (that is, five feet farther from the gating transducer).

m If the LED on the System-Interconnect board is still lit, return to step **g**.

n Remove the hardwire shunt.

o Toggle off the DC power switch on the right edge of the SmartScanNG² enclosure.

p Reattach the Controller module to the rest of the SmartScanNG² enclosure.

q Plug the Molex and ribbon cables into the Controller module.

r Toggle on the DC power switch on the right edge of the SmartScanNG² enclosure.

s Go to step **37.**

36 If your system uses advance transducers:

You will next verify that each advance transducer is functional.

a Using a metal wrench, stroke the top of one of the advance transducers.

The scanner shutters should open completely for 10 seconds.

b On one of the bearing scanners, check to see if the shutter opens.

c If the shutter didn't open, fix this problem before proceeding.

d Using a metal wrench, stroke the top of the other advance transducer.

The scanner shutters should open completely for 10 seconds.

e On one of the bearing scanners, check to see if the shutter opens.

f If the shutter didn't open, fix this problem before proceeding.

37 Produce a Train Summary report.

Section 6.0 - Producing Reports tells how to produce this report.

The Train Summary report lists all trains currently stored in the Trains directory. A line of information is shown for each train entry. The report is divided into a header section and a detail section. The header section contains general information about the site. The detail section contains summary information on each train that passed the site.

38 On the Train Summary report, check the Axles column.

Axle count should be an even number. Odd-numbered axle counts are possible indications of gating transducer problems.

39 If there is an odd axle count and if train speed was always above 7 mph, go to step **41**.

If at any time during train passage the train speed was less than or equal to 7 mph (11.3 kph), gating transducer problems probably don't exist. If the train speed was always above 7 mph, gating transducer problems probably do exist.

The Very Slow Train alarm indicates that, at some point during train passage, four consecutive axles crossed the gating transducers at a speed of 7 mph (11.3 kph) or less. This alarm appears on a Train Detail report.

If there are many slow trains (that is, many trains traveling less than 7 mph) at this site, it may be necessary to relocate the scanners and other track hardware to a better location. Deciding to do this should be made in consultation with STC. Relocating a site is beyond the scope of this document.

40 If there is an even axle count and the values under "Axles," "T01," and "TO2" are the same, go to step **45**.

If things are working correctly, all three values for a given train should be equal. You'll do the next step only if things aren't working correctly.

41 Determine which gating transducer is recording incorrect information.

Determine which gating transducer is recording incorrect axle counts and whether it is not counting all axles or counting extra ones. You may not be able to do this by just looking at the values under the Axles, T01, and TO2 columns of the Train Summary report. Sometimes, a transducer problem causes the number in the Axles column to be incorrect. Therefore, the true axle count may have to be determined from an alternate source, such as the next detector system that encounters the train with the transducer-count imbalance.

After you determine which gating transducer is miscounting, you'll need to change a jumper setting on the Interface board. If TO1 is the problem, you'll change the setting for J201. If TO2 is the problem, you'll change the setting for J202. If both TO1 and T02 have a problem, both jumpers will need to be changed.

Changes to the jumpers should be made only after all external conditions that cause transducer miscounts have been corrected. Some of these external conditions are improperly installed transducers, loose transducer bolts, incorrect transducer heights, damaged transducers, damaged transducer cables, and loose wiring connections. You should have already checked and corrected for these external conditions in steps **4** through **10** above. If you think the corrections you made in those steps fixes gating transducer miscounting, you can skip some of the steps below.

The process of adjusting the transducer loading is trial and error. Generally, if you have too many transducer counts, lower the loading resistance to make the transducer less sensitive. Likewise, too few counts suggest that the transducer is not sensitive enough, so you would select a loading value with more resistance.

42 If you corrected all external conditions that negatively affect gating transducers and you think this fixes gating transducer miscounting, go to step **45**.

43 If the selected gating transducer appears to be missing axles (that is, the transducer that is showing a number of hits less than the true axle count):

a Toggle off the DC power switch on the right edge of the SmartScanNG² enclosure.

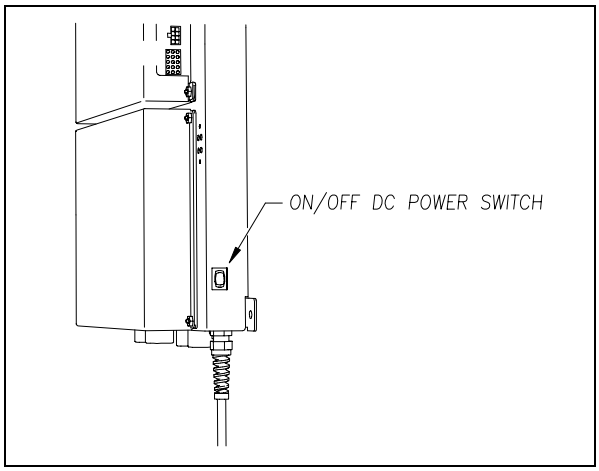

b Remove the six nuts and three screws holding the cover over the Interface board.

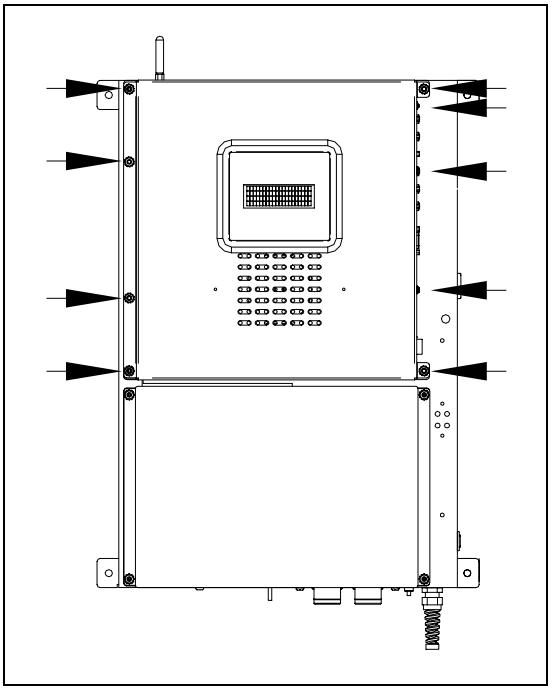

The Interface board is now visible.

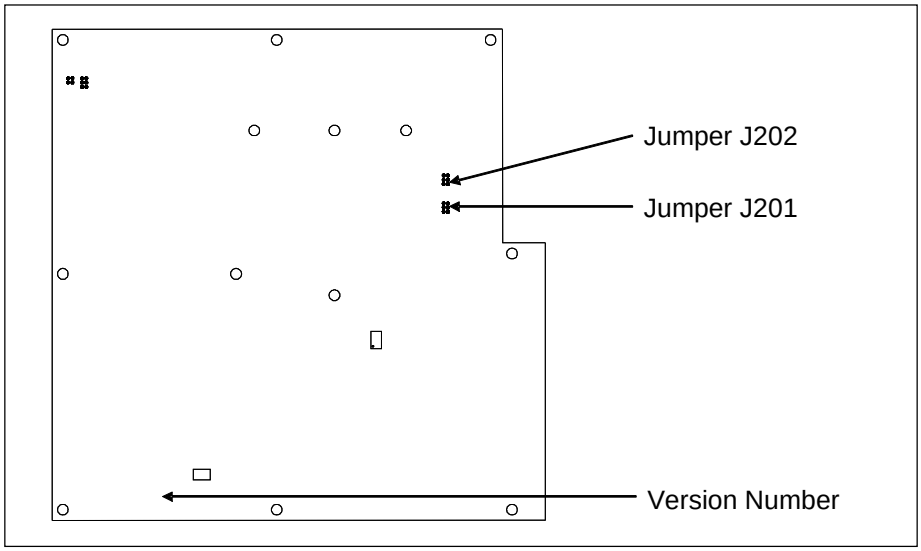

c To prevent the base assembly from falling, replace two of the just removed nuts onto the top two mounting studs on the SmartScanNG² enclosure.

d Store the removed cover, three screws, and remaining four nuts in a safe place until you replace them.

The available loading sensitivities vary depending on which version of Interface board you have and whether resistors are attached to the jumpers or not. The version number is printed on the lower-left edge of the board.

e The table below lists the highest, middle, and lowest sensitivity for transducer loading. Highest is the most sensitive. The jumper's top position is the one closest to the external speaker.

J201 or J202 Jumper Position	Sensitivity Level
Top	Lowest Sensitivity
Center	Middle Sensitivity
Bottom	Highest Sensitivity

f If TO1 is the selected gating transducer and the J201 jumper is currently on the lowest sensitivity position, move it to the middle sensitivity position.

g If TO1 is the selected gating transducer and the J201 jumper is currently on the middle sensitivity position, move it to the highest sensitivity position.

h If TO1 is the selected gating transducer and the J201 jumper is currently on the highest sensitivity position, call STC for help in fixing this problem.

i If TO2 is the selected gating transducer and the J202 jumper is currently on the lowest sensitivity position, move it to the middle sensitivity position.

j If TO2 is the selected gating transducer and the J202 jumper is currently on the middle sensitivity position, move it to the highest sensitivity position.

k If TO2 is the selected gating transducer and the J202 jumper is currently on the highest sensitivity position, call STC for help in fixing this problem.

l Remove the two nuts holding the base assembly to the SmartScanNG² enclosure.

m Using the saved six nuts and three screws, reattach the cover over the Interface board.

n Toggle on the DC power switch on the right edge of the SmartScanNG² enclosure.

44 If the selected gating transducer appears to be counting extra axles (that is, the transducer that is showing a number of hits more than the true axle count):

a Toggle off the DC power switch on the right edge of the SmartScanNG² enclosure.

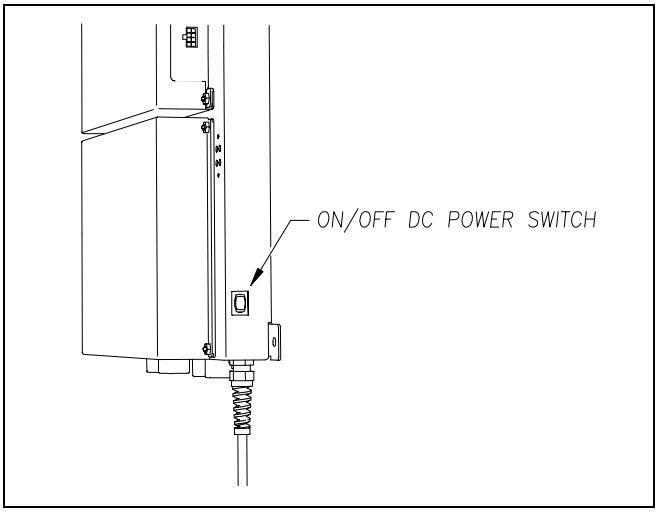

b Remove the six nuts and three screws holding the cover over the Interface board.

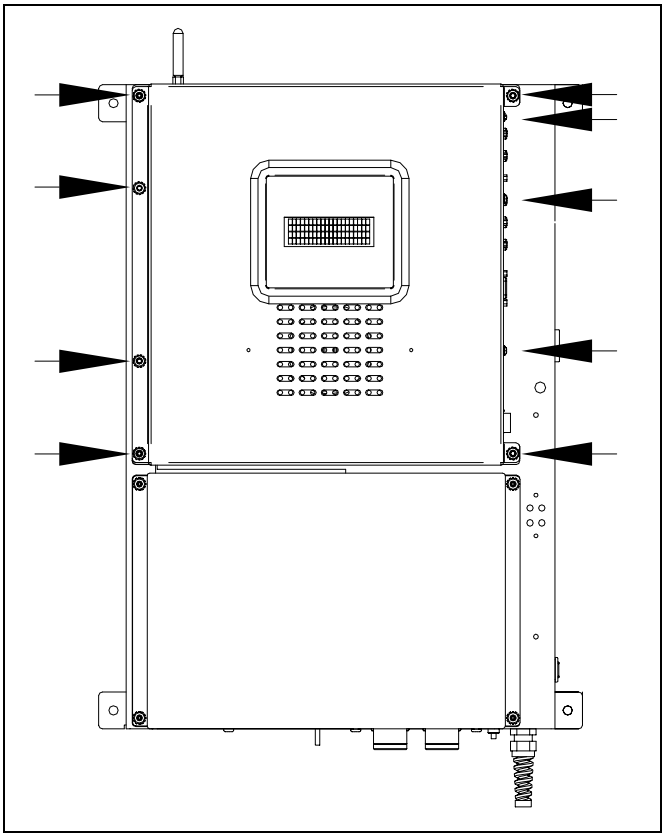

The Interface board is now visible.

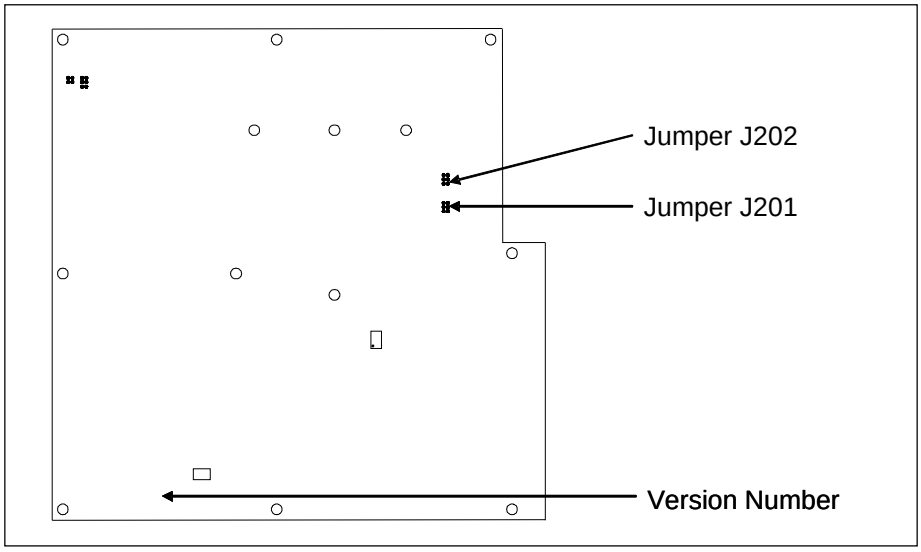

c To prevent the base assembly from falling, replace two of the just removed nuts onto the top two mounting studs on the SmartScanNG² enclosure.

d Store the removed cover, three screws, and remaining four nuts in a safe place until you replace them.

The available loading sensitivities vary depending on which version of the Interface board you have and whether resistors are attached to the jumpers or not. The version number is printed on the lower-left edge of the board.

e The table below lists the highest, middle, and lowest sensitivity for transducer loading. The highest is the most sensitive. The jumper's top position is the one closest to the external speaker.

J201 or J202 Jumper Position	Sensitivity Level
Top	Lowest Sensitivity
Center	Middle Sensitivity
Bottom	Highest Sensitivity

f If TO1 is the selected gating transducer and the J201 jumper is currently on the highest sensitivity position, move it to the middle sensitivity position.

g If TO1 is the selected gating transducer and the J201 jumper is currently on the middle sensitivity position, move it to the lowest sensitivity position.

h If TO1 is the selected gating transducer and the J201 jumper is currently on the lowest sensitivity position, call STC for help in fixing this problem.

i If TO2 is the selected gating transducer and the J202 jumper is currently on the highest sensitivity position, move it to the middle sensitivity position.

j If TO2 is the selected gating transducer and the J202 jumper is currently on the middle sensitivity position, move it to the lowest sensitivity position.

k If TO2 is the selected gating transducer and the J202 jumper is currently on the lowest sensitivity position, call STC for help in fixing this problem.

l Remove the two nuts holding the base assembly to the SmartScanNG² enclosure.

m Using the saved six nuts and three screws, reattach the cover over the Interface board.

n Toggle on the DC power switch on the right edge of the SmartScanNG² enclosure.

45 To use the serial interface to open the scanner shutters:

a Using the serial interface, display the Main menu.

Section 4.0 - Serial Interface tells how to display the Main menu

b Select the System Functions Menu

```
System Functions Menu
----------------------------------------
[A] - Radio Test
[B] - Vocabulary Test
[C] - Radio Inhibit
[D] - Start Manual Train
[E] - 1KHz Test Tone
[F] - Auto-Calibration
[G] - Remote System RESET
[H] - Delete All Stored Train Data
[I] - Clear Event Log
                  .
                  .
                  .
```

c To open the shutters, select the Auto-Calibration option.

The protective shutters in all scanners should open and stay open for three minutes. This might not be enough time to check and clean the shutters and optics. If that isn't enough time, select this option again.

46 In each scanner, check if its shutter opened.

47 If any shutter didn't open, fix this problem before proceeding.

48 In each scanner, check for dirty optics.

49 If dirty, clean the scanner optics with the supplied lens cleaning kit.

Do not use solvents, ammonia-based cleaning solutions, or isopropyl alcohol on the optics. Use clean water or a mild solution of dishwashing liquid. After the liquid on the optics dries, lightly wipe the optics with a clean, dry chamois patch.

50 If the date and time displayed on the top of the System Functions menu are incorrect, fix them before proceeding.

Section 4.0 - Serial Interface tells how to change the date and time.

51 To check the operation of the radio:

a From the System Functions menu, select Radio Test.

During a radio test, the SmartScanNG² system outputs phrases through the speaker and through the radio. Alternatively, you can output a 1kHz test tone instead of phrases. To do this, you would select the 1KHz Test Tone option.

b While listening to the message or tone, look at the display panel.

The PTT LED should be lit.

If this LED isn't lit, the system's ability to send a message or tone to the radio might be inhibited. This can happen when one uses the Radio Inhibit option on the System Functions menu. If the radio is inhibited, the results of this check are invalid.

c If the PTT LED isn't lit, and the radio isn't inhibited, call STC for help in fixing this problem.

52 To check the integrity of the speech data:

a Be sure that the speaker has its volume set to an audible level.

b Using the serial interface, display the Main menu.

Section 4.0 - Serial Interface tells how to display the Main menu.

```
              .
              .
              .
   [J] - Event log
   [K] - System Functions Menu
   [L] - Replay train
   [M] - Security Menu
   [X] - Exit
```

c Select the System Functions menu.

```
  System Functions Menu
  ----------------------------------------
  [A] - Radio Test
  [B] - Vocabulary Test
  [C] - Radio Inhibit
  [D] - Start Manual Train
              .
              .
              .
```

d From the System Functions menu, select Vocabulary Test

This message appears.

```
 Starting Vocabulary Test
```

If the system isn't currently making any other voice announcements, it begins the Vocabulary Test announcement. The SmartScanNG² system outputs phrases through the speaker but not through the radio. After the announcement finishes, the System Functions menu reappears.

If the system is currently making a voice announcement, the firmware displays the "System Is Currently Making Voice Announcements! Try Again Later" message, and the System Functions menu reappears.

e If you hear nothing or speech that is too garbled to understand, call STC for help in fixing this problem.

53 To generate a test train to check the number of axles:

a Quickly stroke the top of each gating transducer with a metal wrench, alternating between TO1 and TO2.

b Repeat step **a** nine more times, for a total of **ten** simulated axles.

c Wait for the system to time out and the shutters to close.

d Produce a Train Detail report for the last train.

Section 6.0 - Producing Reports tells how to produce this report.

e On the report, check that the number of axles agrees with the number of times that you stroked the gating transducers.

f On the report, if the number of axles doesn't agree with the number of times that you stroked the gating transducers, call STC for help in fixing this problem.

54 To generate a test train to check hot bearings:

STC recommends that you use the calibrated heat source (2100-810NG) only when the outside (ambient) temperature is above 0°F (-18°C) and below 90°F (32°C). If you must use it at other times, do so only when the needle is centered on the front of the temperature meter. If the needle isn't stabilized within ± 2 degrees of setpoint, the heat source isn't operating properly.

a Ready the calibrated heat source.

The heat source has reached operating temperature and stabilized when the temperature meter needle remains centered.

b With the power cord to the front of the scanner, place the calibrated heat source on the bearing scanner that is on the rail with the gating transducers.

c Quickly stroke the top of each gating transducer with a metal wrench, alternating between TO1 and TO2 for a total of **six** simulated axles.

You should hear the real-time defect message. No matter how many defects are found, the real-time defect message is only announced once.

d Wait for the system to time out, which normally takes about 10 seconds.

You should hear an end-of-train message with three Hotbox alarms. Per train, only the first three Hotbox alarms are ever announced.

e Listen to be sure that the Hotbox alarms are announced and that they are announced for the correct side.

If you do not hear anything, no alarm-level heat was recorded. No measurable heat from a bearing scanner may be due to loose connections, a scanner not being connected to the bottom of the SmartScanNG² enclosure, a defective shutter motor in the scanner, or a damaged scanner.

f If you do not hear any Hotbox alarms being announced, fix this problem before proceeding.

g If the Hotbox alarms are announced for the wrong side, switch the bearing scanner connections on the bottom of the SmartScanNG² enclosure.

h Repeat the test, this time placing the calibrated heat source on the bearing scanner on the opposite rail

i Verify the results as before.

If the results are correct, your system should function properly when scanning the bearings of real trains.

j Remove the calibrated heat source.

k Store the calibrated heat source and its cable in the wayside enclosure.

55 On the Train Summary report, check the column marked "Average."

For each train, the values in the two columns under this heading should be within four degrees of each other.

56 If the columns aren't within four degrees and if the scanner optics are clean, recalibrate and realign the scanner.

Appendix E & F - Calibration of Type II/Type III Scanners tells how to calibrate the scanners.

57 On the Train Summary report, check the last column of the report.

The last column shows the battery voltage at the time each train passed the site. It should show values between 13.0 and 14.5 volts. Values outside this range may be caused by:

- No AC power for an extended period
- Improperly adjusted float voltage
- Defective battery
- Blown fuses
- Defective battery charger

58 If the most recent value isn't between 13.0 and 14.5 volts, investigate and fix any problems before proceeding.

59 If this is a double-track site, repeat steps **18** through **59** for the other track (that is, for the other SmartScanNG² system).

9.0 Customer Service

At STC, the customer is number one. STC is committed to products that work and customers that are satisfied. Nothing less is acceptable. This section tells how to get answers for questions, fixes for problems, and parts for spares.

9.1 Reaching STC

You can reach STC by mail, telephone, fax, and email. By mail, you can reach STC at:

Southern Technologies Corporation
6145 Preservation Drive
Chattanooga, Tennessee 37416-3638
USA

Mail and shipments are replied to as soon as possible, normally within one working day. Equipment repair usually takes longer.

By telephone, you can reach STC at 423-892-3029, Monday through Friday, from 8:00 a.m. until 5:00 p.m. Eastern time. After business hours, a machine answers the calls. These calls are returned promptly the next business day. By fax, you can reach STC at 423-499-0045. The fax machine can receive faxes at all times. Faxes are replied to as soon as possible, normally within one working day. By email, you can reach STC at email@southern-tech.com. Email is replied to as soon as possible, normally within one working day.

9.2 Returning Equipment for Repair

Return any defective or malfunctioning equipment to STC for repair or replacement. You don't need a return authorization number. You don't even need to make a telephone call first. Just ship it directly to the **Repair Department** at the address above.

With the returned equipment, include:

- Complete address of where the equipment is to be returned.
- Name and telephone number of the person who should be contacted to answer questions about the equipment.
- A written explanation of the equipment defect or malfunction.
- Any reports or other data that would be helpful in diagnosing the problem.
- If out of warranty, credit card number (to be charged) with its expiration date.

9.3 Reporting Problems or Suggestions

If you have any problems, suggestions, or questions related to STC equipment, telephone the **Engineering Department** at the telephone number above. When calling, state the equipment you're calling about. Your call will then be directed to the right person.

9.4 Ordering Spare Parts

If you need any spare parts to support STC equipment, telephone or fax the **Sales Department** at the telephone numbers above.

When calling, state that you're calling to order parts. Your call will then be directed to the right person. When placing the order, reference the STC part numbers listed in this guide. However, if you don't have the part numbers, the sales staff can obtain them for you and provide you with current pricing and availability.

When faxing, include:

- Purchase Order Number for the order <u>or</u> credit card number (to be charged) with its expiration date.
- Complete address where the parts are to be shipped.
- Complete address where the invoice is to be mailed.
- Name and telephone number of the person who should be contacted to answer questions about the order.
- Your fax number, if available.
- For each item ordered, part number, complete description, and quantity needed.

9.5 Checking on Shipments and Orders

If you need to check on the status of any shipment or order, telephone or fax the **Sales Department** at the telephone numbers above.

When calling, state that you're checking the status of a shipment or order. Your call will then be directed to the right person. Have your Purchase Order Number ready when you call. However, if you don't have the order number, the sales staff can locate your order number and provide you with the status of the shipment or order.

When faxing, include:

- Purchase Order Number for the shipment or order being checked.
- Name and telephone number of the person who should be contacted after the order status is checked.
- Your fax number, if available.

Appendix A
System Alarms

This appendix describes the conditions and events that the SmartScanNG² system flags as System Alarms. These alarms provide data about passing trains and system status. These alarms are listed under the System Alarms section of the Train Detail and Exception Detail reports. ***Section 6.0 - Producing Reports*** tells how to produce these reports.

A.1 Cold Rail Alarm

The Cold Rail alarm indicates that the temperatures of all bearings (of the train) on the designated rail were below a given temperature. When no bearing on a given rail generates a delta temperature reading greater than or equal to the temperature set by the **Cold Rail Temperature option** on the Alarm Settings menu, the system generates a Cold Rail alarm. ***Section 4.0 - Serial Interface*** tells how to view or change the Cold Rail Temperature option.

```
Alarm Settings
----------------------------------------
[A] - Absolute ..................... 150
[B] - Differential ................. 255
[C] - Hot Wheel .................... 500
[D] - Carside Slope ............... 1.31
[E] - Carside Minimum ............... 90
[F] - Cold Rails ..................... 3
[G] - Cold Rail Temp ................ 10
[H] - Cold Res Counter ............... 3
[I] - Res Test: Minimum Rail Avg .... 25
[J] - Res Test: Minimum Wheel Avg ... 28
[K] - Warm Bearing Trigger .......... 50
[L] - Warm Wheel Trigger ........... 100
[X] – Exit
```

There is a different Cold Rail alarm for each rail. That is, there is a Cold North Rail alarm and a Cold South Rail alarm (or, depending on track direction, a Cold East Rail alarm, and a Cold West Rail alarm).

The maximum number (per railside) of consecutive trains, having Cold Rail alarms, allowed before generating a Successive Cold Rails Exceeded alarm is set by the **Cold Rails option** on the Alarm Settings menu. If the number of consecutive trains bearing identical Cold Rail alarms equals or exceeds the cold-rail-alarm limit, the System Alarms section of the Train Detail and Exception Detail reports displays the message "Successive Cold Rails Exceeded." Successive Cold Rails Exceeded alarms are covered in the next appendix. ***Section 4.0 - Serial Interface*** tells how to view or change the Cold Rails option.

```
                    •
                    •
                    •
[D] - Carside Slope ............... 1.31
[E] - Carside Minimum ............... 90
[F] - Cold Rails ..................... 3
[G] - Cold Rail Temp ................ 10
[H] - Cold Res Counter ............... 3
[I] - Res Test: Minimum Rail Avg .... 25
[J] - Res Test: Minimum Wheel Avg ... 28
[K] - Warm Bearing Trigger .......... 50
[L] - Warm Wheel Trigger ........... 100
[X] – Exit
```

A.2 Cold Resistor Alarm

A resistor is mounted to the inside of the bearing scanner's shutter. A voltage is applied to this resistor while the shutter is open, causing it to heat up. After a train has left a site and the shutters have closed, the temperature of the resistor is read by the scanner pyrometer. In this way, a check of the system's ability to read heat correctly is made. The Cold Resistor alarm indicates that the minimum value expected for the temperature of the resistor wasn't met. This minimum value is determined by the firmware and is dependent upon the time it takes a train to pass a site.

If the **minimum value** wasn't met, a second check compares the recorded resistor temperature against the limit that was established using the Absolute option on the Alarm Settings menu. (This alarm limit is an offset, in degrees Fahrenheit, above the ambient temperature.) If the recorded resistor temperature meets or exceeds the absolute-alarm limit, the firmware cancels any previously flagged Cold Resistor alarms. ***Section 4.0 - Serial Interface*** tells how to view or change the Absolute option.

```
Alarm Settings
----------------------------------------
[A] - Absolute ...................... 150
[B] - Differential ................. 255
[C] - Hot Wheel .................... 500
                    •
                    •
                    •
```

There is a different Cold Resistor alarm for each rail. That is, there is a Cold North Resistor alarm and a Cold South Resistor alarm (or, depending on track direction, a Cold East Resistor alarm and a Cold West Resistor alarm).

The **maximum number** (per railside) of consecutive trains, having Cold Resistor alarms, allowed before generating a Successive Cold Resistors Exceeded alarm is set by the **Cold Resistor Counter option** on the Alarm Settings menu. Successive Cold Resistors Exceeded alarms are covered in the next appendix. ***Section 4.0 - Serial Interface*** tells how to view or change the Cold Resistor Counter option.

```
                 .
                 .
   [D] - Carside Slope ............... 1.60
   [E] - Carside Minimum ............. 300
   [F] - Cold Rails ..................... 2
   [G] - Cold Rail Temp ................ 10
   [H] - Cold Res Counter ............... 3
                 .
                 .
                 .
```

A.3 Cold Wheel Scanner Alarm

The Cold Wheel Scanner alarm represents the wheel scanner's equivalent of the bearing scanner's Cold Rail alarm. When no wheel on a given rail generates a delta temperature reading greater than or equal to a preset minimum, the system generates a Cold Wheel Scanner alarm. The preset minimum temperature is determined by the firmware and is currently 9°F above ambient (5°C above ambient). The customer can't change this value. Just like Cold Rail alarms, separate Cold Wheel Scanner alarms exist for each railside.

The maximum number (per railside) of consecutive trains, having Cold Wheel Scanner alarms, allowed before generating a Successive Cold Wheels Exceeded alarm is set by the **Cold Rails option** on the Alarm Settings menu. Successive Cold Wheels Exceeded alarms are covered in the next appendix. ***Section 4.0 - Serial Interface*** tells how to view or change the Cold Rails option.

```
                 .
                 .
                 .
   [D] - Carside Slope ............... 1.31
   [E] - Carside Minimum ............. 90
   [F] - Cold Rails ..................... 3
   [G] - Cold Rail Temp ................ 10
   [H] - Cold Res Counter ............... 3
                 .
                 .
                 .
```

A.4 Cold Wheel Scanner Resistor Alarm

The Cold Wheel Scanner Resistor alarm represents the wheel scanner's equivalent of the bearing scanner's Cold Resistor alarm. Evaluation of Cold Wheel Scanner Resistor alarm occurs in two stages. The first stage mimics the same logic used in the evaluation of Cold Resistor alarms. After finishing this check and possibly flagging a Cold Wheel Scanner Resistor alarm, the firmware compares the recorded resistor temperature against a value of one-third of the hot wheel alarm limit. If the recorded resistor temperature meets or exceeds this value, the firmware cancels any previously flagged Cold Wheel Scanner Resistor alarm. In this way, the system confirms the scanner's ability to read alarm level heat. Just like Cold Resistor alarms, separate Cold Wheel Scanner Resistor alarms exist for each railside.

The maximum number (per railside) of consecutive trains, having Cold Wheel Scanner Resistor alarms, allowed before generating a Successive Cold Wheel Resistors Exceeded alarm is set by the Cold Rails option on the Alarm Settings menu. Successive Cold Wheel Resistors Exceeded alarms are covered in the next appendix. ***Section 4.0 - Serial Interface*** tells how to view or change the Cold Rails option.

```
                    .
                    .
                    .
  [D] - Carside Slope ............... 1.31
  [E] - Carside Minimum ............... 90
  [F] - Cold Rails ..................... 3
  [G] - Cold Rail Temp ................ 10
  [H] - Cold Res Counter ............... 3
                    .
                    .
                    .
```

A.5 Highrange Transducer Miscounts Alarm

The Highrange Transducer Miscounts alarm indicates that the transducer counts for TO1 and TO2 are off by seven or more. This calculation is made after each axle crosses both gating transducers. When this alarm occurs, the system won't announce axle count, exit speed, length of train, or total number of cars (even if these messages are enabled).

The Highrange Transducer Miscounts alarm <u>can be either</u> a System Alarm or an Integrity Failure, depending on the presence of a Very Slow Train alarm. If a highrange transducer miscount occurs on a train that also contains a Very Slow Train alarm, the firmware treats the miscount condition as a System Alarm. This logic assumes that the train's slow rate of travel likely caused the transducer miscount condition. If a highrange transducer miscount occurs on a train traveling faster than 7 mph (11.3 kph), the firmware treats the miscount condition as an Integrity Failure.

A.6 Integrity Failure Alarm

The Integrity Failure alarm indicates that the SmartScanNG² system determined that a condition exists that could prevent proper scanning of a train. In other words, this alarm indicates the existence of one or more conditions in which the integrity of the system, and its ability accurately to record train data, may be compromised. These unusual conditions, called Integrity Failures, may require train stoppage, later maintenance, or both. They are covered in the next appendix.

A.7 Low Battery Alarm

The Low Battery alarm indicates a float voltage of at least 11.8 volts, but less than 12.6 volts, on the standby battery.

A.8 Midrange Transducer Miscounts Alarm

The Midrange Transducer Miscounts alarm indicates that the transducer counts for TO1 and TO2 are off by five or six. This calculation is made after each axle crosses both gating transducers.

A.9 No Approach Track Alarm

The No Approach Track alarm indicates that the track circuit (or the advance transducers) failed to signal the presence of a train and that the SmartScanNG² system started from the train passing over the gating transducers.

NOTE: This alarm is suppressed if the Presence Hardware is set to “No” in Equipment Setup Menu.

A.10 Pyrometer Noise Filtered Rail Alarm

The Pyrometer Noise Filtered Rail alarm indicates that a pyrometer in a bearing scanner might be becoming unreliable. This alarm isn't considered an Integrity Failure and therefore won't result in “Integrity Failure” being part of the post-train announcement.

There is a different Pyrometer Noise Filtered Rail alarm for each rail. That is, there is a Pyrometer Noise Filtered North Rail alarm and a Pyrometer Noise Filtered South Rail alarm (or, depending on track direction, a Pyrometer Noise Filtered East Rail alarm and a Pyrometer Noise Filtered West Rail alarm).

A.11 Pyrometer Noise Filtered Wheel Alarm

The Pyrometer Noise Filtered Wheel alarm indicates that a pyrometer in a wheel scanner might be becoming unreliable. This alarm isn't considered an Integrity Failure and therefore won't result in “Integrity Failure” being part of the post-train announcement.

There is a different Pyrometer Noise Filtered Wheel alarm for each rail. That is, there is a Pyrometer Noise Filtered North Wheel alarm and a Pyrometer Noise Filtered South Wheel alarm (or, depending on track direction, a Pyrometer Noise Filtered East Wheel alarm and a Pyrometer Noise Filtered West Wheel alarm).

A.12 Reverse Direction Detected

Trains that are being scanned correctly will have axles whose on-times are less than their off-times. For each axle of a passing train (except for the first axle), the system checks for an on-time that is greater than the off-time. If the axle's on-time is greater than its off-time, the system reverses the direction locked-in by the first gating pulse, reverses the opening and closing gate assignment for TO1 and TO2, and generates a false transducer pulse. The system considers the gate active for the next axle at the time it determines the current axle's opening gate pulse was missed.

The Reverse Direction Detected alarm indicates that the system entered a state where it is scanning for bearing temperatures when the axles are outside the scanning gate. In this state, the transducer that should be opening the scanning gate is considered by the system to be the transducer that is closing the gate. Likewise, the transducer that should be closing the scanning gate is considered the transducer that is opening the gate.

A.13 Short Train Alarm

The Short Train alarm indicates that a train had fewer than 50 axles.

A.14 Stuck Dragger Recovered Alarm

The Stuck Dragger Recovered alarm indicates that a stuck dragger was detected during train passage, and at some point later, the dragging-equipment detector returned to its neutral position. After returning to its neutral position, the firmware must scan at least eight consecutive Dragger free axles before flagging this condition again.

A.15 Test Train Alarm

The Test Train alarm indicates that a given train was generated by the SmartScanNG² system. These trains are used for testing purposes and do not represent actual trains passing the site.

A.16 Very Slow Train Alarm

The Very Slow Train alarm indicates that, at some point during train passage, four consecutive axles crossed the gating transducers at a speed of 7 mph (11.3 kph) or less. When this alarm occurs, the system won't announce axle count, exit speed, length of train, and total number of cars (even if these messages are enabled).

Appendix B
Integrity Failures

This appendix describes the conditions and events that the SmartScanNG² system flags as Integrity Failures. These alarms indicate conditions in which the integrity of the system, and its ability to record train data accurately, may be compromised. These alarms are listed under the System Alarms section of the Train Detail and Exception Detail reports. ***Section 6.0 - Producing Reports*** tells how to produce these reports.

B.1 Dead Battery Alarm

The Dead Battery alarm indicates a float voltage of less than 11.8 volts on the standby battery.

B.2 Dead Resistor Alarm

The bearing scanner's Dead Resistor alarm indicates the presence of two separate conditions. First, the train must contain a Cold Rail alarm on a given rail. Second, the presence of a Cold Resistor alarm on the given rail. For a given rail, Cold Rail plus Cold Resistor equals Dead Resistor.

There is a different Dead Resistor alarm for each rail. That is, there is a Dead North Resistor alarm and a Dead South Resistor alarm (or, depending on track direction, a Dead East Resistor alarm, and a Dead West Resistor alarm).

B.3 Dead Wheel Scanner Resistor Alarm

The wheel scanner's Dead Wheel Scanner Resistor alarm indicates the presence of two separate conditions. First, the train must contain a Cold Wheel Scanner alarm on a given rail. Second, the recorded temperature for the wheel scanner's resistor on that rail must fall below the value set by the Cold Rail Temperature option on the Alarm Settings menu. ***Section 4.0 - Serial Interface*** tells how to view or change the Cold Rail Temperature option.

```
Alarm Settings
----------------------------------------
[A] - Absolute ..................... 150
[B] - Differential ................. 255
[C] - Hot Wheel .................... 500
[D] - Carside Slope ............... 1.31
[E] - Carside Minimum ............... 90
[F] - Cold Rails ....................  3
[G] - Cold Rail Temp ................ 10
[H] - Cold Res Counter ............... 3
[I] - Res Test: Minimum Rail Avg .... 25
[J] - Res Test: Minimum Wheel Avg ... 28
[K] - Warm Bearing Trigger .......... 50
[L] - Warm Wheel Trigger ........... 100
[X] – Exit
```

There is a different Dead Wheel Scanner Resistor alarm for each rail. That is, there is a Dead North Wheel Scanner Resistor alarm and a Dead South Wheel Scanner Resistor alarm (or, depending on track direction, a Dead East Wheel Scanner Resistor alarm and a Dead West Wheel Scanner Resistor alarm).

B.4 Highrange Transducer Miscounts Alarm

The Highrange Transducer Miscounts alarm indicates that the transducer counts for TO1 and TO2 are off by seven or more. This calculation is made after each axle crosses both gating transducers. When this alarm occurs, the system won't announce axle count, exit speed, length of train, or total number of cars (even if these messages are enabled).

The Highrange Transducer Miscounts alarm can be either a System Alarm or an Integrity Failure, depending on the presence of a Very Slow Train alarm. If a highrange transducer miscount occurs on a train that also contains a Very Slow Train alarm, the firmware treats the miscount condition as a System Alarm. This logic assumes that the train's slow rate of travel likely caused the transducer miscount condition. If a highrange transducer miscount occurs on a train traveling faster than 7 mph (11.3 kph), the firmware treats the miscount condition as an Integrity Failure.

B.5 Stuck Dragger During Train Passage Alarm

The Stuck Dragger During Train Passage alarm indicates that the preset maximum number of consecutive axles have had Dragging-Equipment alarms during train passage. The maximum number is determined by the firmware and is currently five.

B.6 Stuck Dragger Pretrain Alarm

The Stuck Dragger Pretrain alarm indicates that the dragging-equipment detector was stuck before the scanners started scanning. That is, between the time of first receiving a pulse from the track circuit (or the advance transducers) and the time of first receiving a pulse from either gating transducer, the SmartScanNG² system detected an open circuit from the dragging-equipment detector.

B.7 Stuck High-Load Detector Pretrain Alarm

The Stuck High-Load Detector Pretrain alarm indicates that, before the scanners started scanning, the high-load detector was stuck. That is, between the time of first receiving a pulse from the track circuit (or the advance transducers) and the time of first receiving a pulse from either gating transducer, the SmartScanNG² system detected an open circuit from the high-load detector.

B.8 Stuck Wide-Load Detector Pretrain Alarm

The Stuck Wide-Load Detector Pretrain alarm indicates that, before the scanners started scanning, the wide-load detector was stuck. That is, between the time of first receiving a pulse from the track circuit (or the advance transducers) and the time of first receiving a pulse from either gating transducer, the SmartScanNG² system detected an open circuit from the wide-load detector.

There is a different Stuck Wide-Load Detector Pretrain alarm for each rail. That is, there is a Stuck Wide-Load Detector Pretrain North Side alarm and a Stuck Wide-Load Detector Pretrain South Side alarm (or, depending on track direction, a Stuck Wide-Load Detector Pretrain East Side alarm and a Stuck Wide-Load Detector Pretrain West Side alarm).

B.9 Successive Cold Rails Exceeded Alarm

The Successive Cold Rails Exceeded alarm indicates that at least a preset maximum number of consecutive trains, all having Cold Rail alarms on the same railside, have passed a site. The maximum number (per railside) of consecutive trains having Cold Rail alarms allowed before generating this alarm is set by the Cold Rails option on the Alarm Settings menu. ***Section 4.0 - Serial Interface*** tells how to view or change the Cold Rails option.

```
                    .
                    .
                    .
  [D] - Carside Slope ............... 1.31
  [E] - Carside Minimum ............... 90
  [F] - Cold Rails ..................... 3
  [G] - Cold Rail Temp ................ 10
  [H] - Cold Res Counter ............... 3
                    .
                    .
                    .
```

Under normal circumstances, Cold Rail conditions represent System Alarms, not Integrity Failures. However, if the number of consecutive trains bearing the same Cold Rail alarm equals or exceeds the cold-rail-alarm limit, this condition becomes an Integrity Failure. If the number of consecutive trains bearing identical Cold Rail alarms equals or exceeds the cold-rail-alarm limit, the System Alarms section of the Train Detail and Exception Detail reports displays the message "Successive Cold Rails Exceeded."

B.10 Successive Cold Resistors Exceeded Alarm

The Successive Cold Resistors Exceeded alarm indicates that at least a preset maximum number of consecutive trains, all having Cold Resistor alarms on the same railside, have passed a site. The maximum number (per railside) of consecutive trains having Cold Resistor alarms allowed before generating an Integrity Failure alarm is set by the Cold Rails option on the Alarm Settings menu. ***Section 4.0 - Serial Interface*** tells how to view or change the Cold Rails option.

```
                    .
                    .
                    .
  [D] - Carside Slope ............... 1.31
  [E] - Carside Minimum ............... 90
  [F] - Cold Rails ..................... 3
  [G] - Cold Rail Temp ................ 10
  [H] - Cold Res Counter ............... 3
                    .
                    .
                    .
```

Under normal circumstances, Cold Resistor conditions represent System Alarms, not Integrity Failures. However, if the number of consecutive trains bearing the same Cold Resistor alarm equals or exceeds the cold-rail-alarm limit, this condition becomes an Integrity Failure. If the number of consecutive trains bearing identical Cold Resistor alarms equals or exceeds the cold-rail-alarm limit, the System Alarms section of the Train Detail and Exception Detail reports displays the message "Successive Cold Resistors Exceeded."

B.11 Successive Cold Wheels Exceeded Alarm

The Successive Cold Wheels Exceeded alarm indicates that at least a preset maximum number of consecutive trains, all having Cold Wheel Scanner alarms on the same railside, have passed a site. The user determines the number of consecutive trains used in the comparison through the Cold Rails setup parameter. ***Section 4.0 - Serial Interface*** tells how to view or change the Cold Rails option.

```
                    .
                    .
                    .

[D] - Carside Slope ............... 1.31
[E] - Carside Minimum ............... 90
[F] - Cold Rails ..................... 3
[G] - Cold Rail Temp ................ 10
[H] - Cold Res Counter ............... 3
                    .
                    .
                    .
```

Under normal circumstances, Cold Wheel conditions represent System Alarms, not Integrity Failures. However, if the number of consecutive trains bearing the same Cold Wheel Scanner alarm <u>equals</u> <u>or</u> <u>exceeds</u> the cold-rail-alarm limit, this condition becomes an Integrity Failure. If the number of consecutive trains bearing identical Cold Wheel Scanner alarms equals or exceeds the cold-rail-alarm limit, the System Alarms section of the Train Detail and Exception Detail reports displays the message "Successive Cold Wheels Exceeded."

B.12 Successive Cold Wheel Resistors Exceeded Alarm

The Successive Cold Wheel Resistors Exceeded alarm occurs when a specified number of consecutive trains, each containing a Cold Wheel Scanner Resistor alarm on the same railside, pass the site. The user determines the number of consecutive trains used in the comparison through the Cold Rails setup parameter. ***Section 4.0 - Serial Interface*** tells how to view or change the Cold Rails option.

```
                    .
                    .
                    .
  [D] - Carside Slope ............... 1.31
  [E] - Carside Minimum ............... 90
  [F] - Cold Rails ..................... 3
  [G] - Cold Rail Temp ................ 10
  [H] - Cold Res Counter ............... 3
                    .
                    .
                    .
```

Under normal circumstances, Cold Wheel Resistor conditions represent System Alarms, not Integrity Failures. However, if the number of consecutive trains bearing the same Cold Wheel Scanner Resistor alarm equals or exceeds the cold-rail-alarm limit, this condition becomes an Integrity Failure. If the number of consecutive trains bearing identical Cold Wheel Scanner Resistor alarms equals or exceeds the cold-rail-alarm limit, the System Alarms section of the Train Detail and Exception Detail reports displays the message "Successive Cold Wheel Resistors Exceeded."

B.13 Train Present on Restart Alarm

The Train Present on Restart alarm indicates that a train was present at the site when the system was powering up.

Appendix C
Replacement of Type2 Scanners

There are type2 bearing scanners and type2 wheel scanners. Both contain two major parts. The top part is the cover-and-module assembly. The module and its protective cover are tightly integrated and rarely should be taken apart. Except for the addition of a plastic attenuation plug on the wheel scanner cover, both types of cover-and-module assemblies are identical and can be used interchangeably. The bottom part is the mount. Bearing scanner mounts and wheel scanner mounts are different in design. They can't be interchanged.

This appendix tells how to replace scanner cover-and-module assemblies. The replacement of scanner mounts isn't covered in this guide.

C.1 Bearing Scanners

The figure below shows the major parts of a type2 bearing scanner.

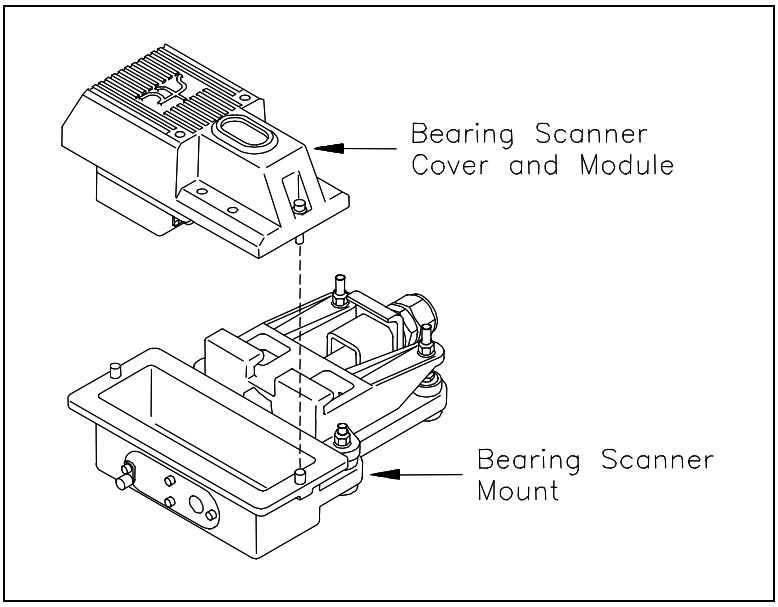

To replace a type2 bearing scanner cover-and-module assembly:

1. Be sure that you have on hand a new scanner cover-and-module assembly.
2. Be sure that you have on hand a T-handle 1/4-inch hex-wrench.

3 Turn off all power to the SmartScanNG² enclosure.

4 Using a T-handle 1/4-inch hex-wrench, loosen both socket-head-cap screws on the cover of the bearing scanner.

5 Separate the scanner cover-and-module assembly from its mount.

6 Disconnect the scanner cable connector from the scanner box connector.

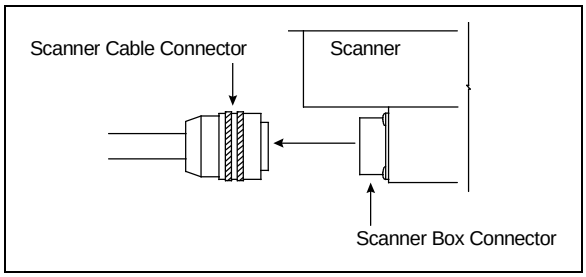

7 Store the removed scanner cover-and-module assembly in a safe place until you return it to STC for repair.

8 Attach the scanner cable connector to the scanner box connector (on the new scanner cover-and-module assembly).

9 With the hole (on top of the scanner cover) facing north or east, replace the scanner cover-and-module assembly onto its mount.

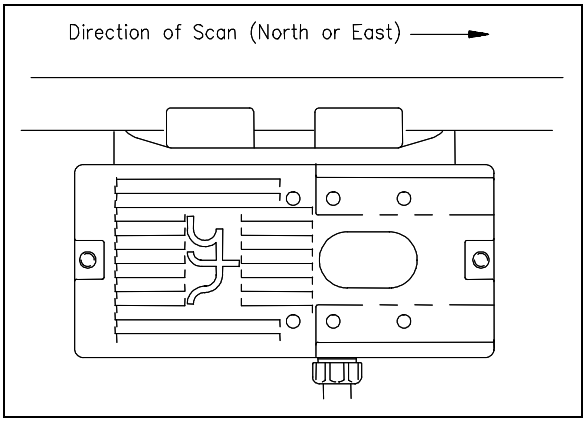

10 Using a T-handle 1/4-inch hex-wrench, tighten the two screws (on the scanner cover) until they are completely tight.

11 Turn on power to the SmartScanNG² enclosure.

C.2 Wheel Scanners

The figure below shows the major parts of a type2 wheel scanner.

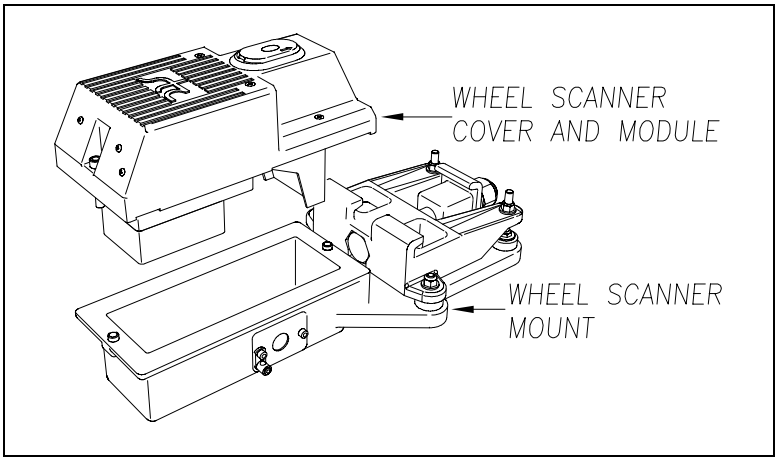

To replace a type2 wheel scanner cover-and-module assembly:

1. Be sure that you have on hand a new scanner cover-and-module assembly.
2. Be sure that you have on hand a T-handle 1/4-inch hex-wrench.
3. Turn off all power to the SmartScanNG² enclosure.
4. Using a T-handle 1/4-inch hex-wrench, loosen the two socket-head-cap screws on the cover of the bearing scanner.
5. Separate the scanner cover-and-module assembly from its mount.
6. Disconnect the scanner cable connector from the scanner box connector.

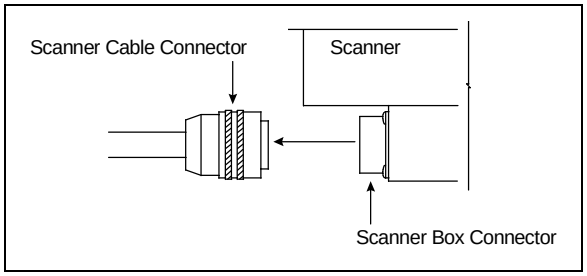

7. Store the removed scanner cover-and-module assembly in a safe place until you return it to STC for repair.
8. Attach the scanner cable connector to the scanner box connector (on the new scanner cover-and-module assembly).
9. With the hole (on top of the scanner cover) facing the center of the track, replace the scanner cover-and-module assembly onto its mount.
10. Using a T-handle 1/4-inch hex-wrench, tighten the two screws (on the scanner cover) until they are completely tight.
11. Turn on power to the SmartScanNG² enclosure.

Appendix D
Replacement of Type III Scanners

There are bearing scanners and wheel scanners. Both contain two major parts. The top part is the cover-and-module assembly. The module and its protective cover are tightly integrated and rarely should be taken apart. Except for the change of **filter frames** in the wheel scanner module, both types of cover-and-module assemblies are identical and can be used interchangeably. The bottom part is the mount. Bearing scanner mounts and wheel scanner mounts are different in design. They can't be interchanged.

This appendix tells how to replace scanner cover-and-module assemblies. The replacement of scanner mounts isn't covered in this guide.

D.1 Bearing Scanners

The figure below shows the major parts of a bearing scanner.

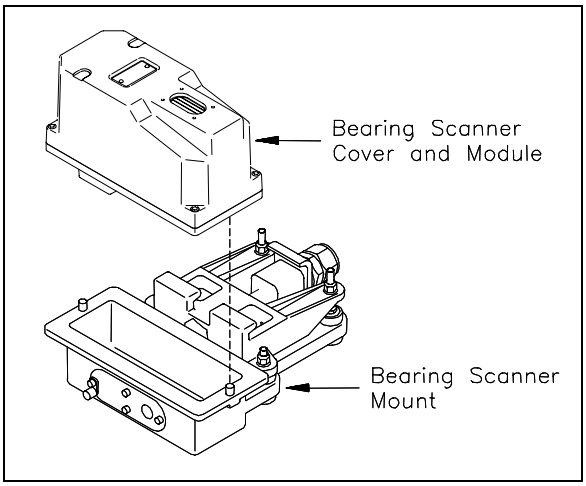

To replace a bearing scanner cover-and-module assembly:

1. Be sure that you have on hand a new scanner cover-and-module assembly.
2. Be sure that you have on hand a T-handle 1/4-inch hex-wrench.
3. Turn off all power to the scanners.

   This requires turning off the DC power switch on the SmartScanNG² enclosure and unplugging the AC power cord on the bottom of the SmartScanNG² enclosure.

4 Using a T-handle 1/4-inch hex wrench, loosen the six socket-head-cap screws on the cover of the bearing scanner.

Four screws attach the weather cover to the mounting plate, and two screws attach the mounting plate to the mount.

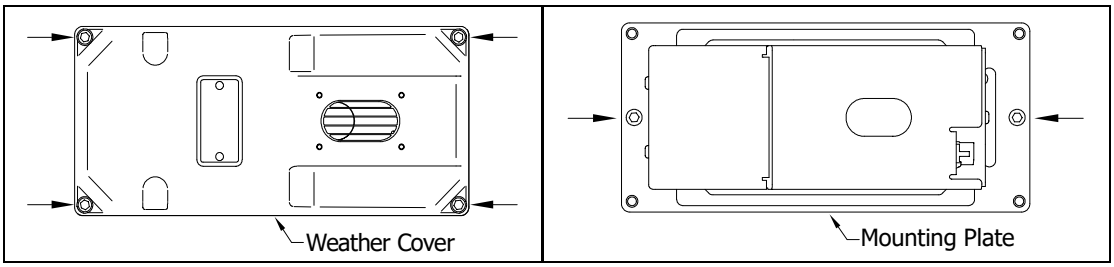

5 Separate the bearing scanner cover-and-module assembly from its mount.

6 Disconnect the heater wiring plug.

7 Disconnect the scanner cable connector from the scanner box connector.

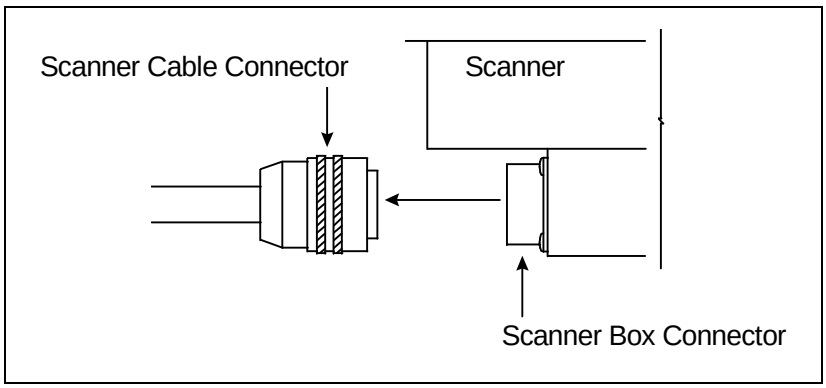

8 Store the removed scanner cover-and-module assembly in a safe place until you return it to STC for repair.

9 Attach the scanner cable connector to the scanner box connector of the new scanner cover-and-module assembly.

10 With the hole on top of the bearing scanner cover facing north or east, set the mounting plate back onto its scanner mount.

11 Using the T-handle 1/4-inch hex-wrench, uniformly tighten the two socket-head-cap screws.

12 Reconnect the heater wiring plug.

13 With the hole on top of the bearing scanner cover facing north or east, set the weather cover back onto its mounting plate.

14 Using the T-handle 1/4-inch hex-wrench, uniformly tighten the four socket-head-cap screws.

The top view of the bearing scanner mounting plate and weather cover is shown below.

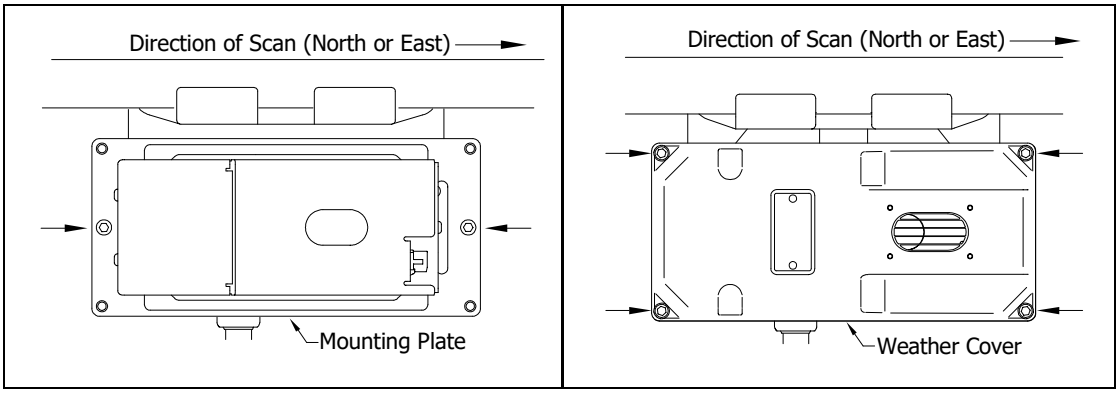

15 Turn on power to the scanners.

An assembled bearing scanner looks like this.

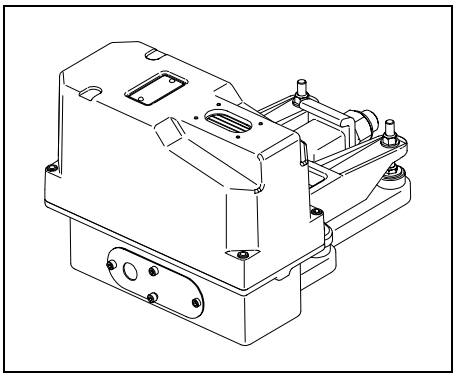

D.2 Wheel Scanners

The figure below shows the major parts of a wheel scanner.

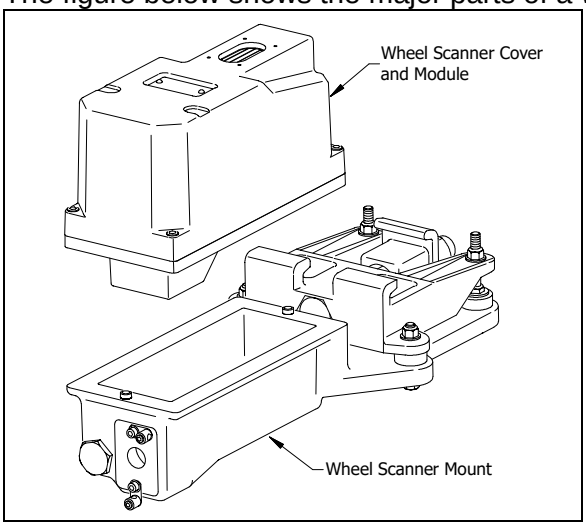

To replace a wheel scanner cover-and-module assembly:

1 Be sure that you have on hand a new scanner cover-and-module assembly.

2 Be sure that you have on hand a T-handle 1/4-inch hex-wrench.

3 Turn off all power to the scanners.

This requires turning off the DC power switch on the SmartScanNG² enclosure and unplugging the AC power cord on the bottom of the SmartScanNG² enclosure.

4 Using a T-handle 1/4-inch hex wrench, loosen the six socket-head-cap screws on the cover of the wheel scanner.

Four screws attach the weather cover to the mounting plate, and two screws attach the mounting plate to the mount.

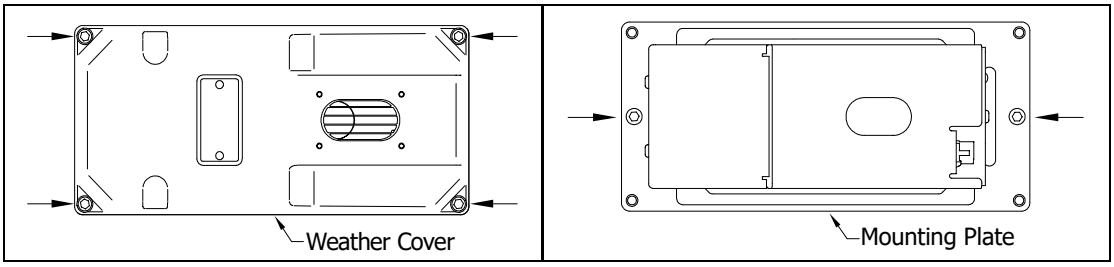

5 Separate the wheel scanner cover-and-module assembly from its mount.

6 Disconnect the heater wiring plug.

7 Disconnect the scanner cable connector from the scanner box connector.

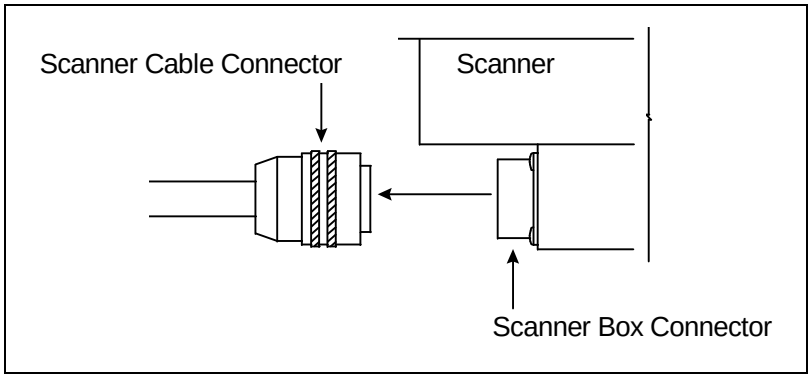

8 Store the removed scanner cover-and-module assembly in a safe place until you return it to STC for repair.

9 Attach the scanner cable connector to the scanner box connector of the new scanner cover-and-module assembly.

10 With the hole on top of the wheel scanner cover facing the center of the track, set the mounting plate back onto its scanner mount.

11 Using the T-handle 1/4-inch hex-wrench, uniformly tighten the two socket-head-cap screws.

12 Reconnect the heater wiring plug.

13 With the hole on top of the wheel scanner cover facing the center of the track, set the weather cover back onto its mounting plate.

14 Using the T-handle 1/4-inch hex-wrench, uniformly tighten the four socket-head-cap screws.

15 Turn on power to the scanners.

Appendix E
Calibration of Type2 Scanners

The SmartScanNG² system self-calibrates its pyrometer interface circuitry. You need only put a preheated calibrated heat source on a scanner and place the system in autocalibration mode. The system then scans all pyrometer inputs until the signal from the calibrated heat source is located. The necessary adjustments to the related interface circuitry are automatically made while the system monitors its own progress by analyzing changes in the heat signals. Once the procedure has been completed, autocalibration mode is disengaged, and the calibration results are displayed on your computer.

This appendix tells how to use the calibrated heat source to calibrate the scanners.

E.1 Bearing Scanners

STC recommends that you use the calibrated heat source (2100-810NG) only when the outside (ambient) temperature is above 0°F (-18°C) and below 90°F (32°C). If you must use it at other times, do so only when the needle is centered on the front of the temperature meter. If the needle isn't stabilized within ± 2-degrees of the setpoint, the heat source isn't operating properly.

To calibrate a type2/type3 bearing scanner:

1. Be sure that you have on hand an STC calibrated heat source (2100-810NG) and a laptop computer.
2. On the control panel of the calibrated heat source, toggle the **Gating** switch off.
3. Plug the proper end of the supplied 50-foot (15.2-meter) power cord into the **six**-contact circular connector on the front of the calibrated heat source.
4. Plug the other end of the power cord into a grounded three-wire 110-120 VAC outlet in the wayside enclosure.

   The function connector that is not being used has live AC present.

5. Cover the function connector that is not being used with the supplied dust cover.
6. On the control panel, turn the temperature knob to **180**.
7. Put the heat source in a shady area, out of direct sunlight.
8. Wait about 8 minutes for the heat source to reach operating temperature and stabilize.

   The heat source has reached operating temperature and stabilized when the temperature meter needle remains centered.

   Once the temperature stabilizes, calibration may begin. Once stabilized, the temperature will change less than plus-or-minus one degree Fahrenheit.

9 With the power cord to the front of the scanner, place the calibrated heat source on the scanner.

10 Be sure that a computer is plugged into COM1 (on the side of the Controller module), that it is turned on, that it has appropriate communications software installed, that the communications software is set to use full-duplex, that the baud rate is set to 19,200, and that a LOG file is opened.

11 Using the serial interface, display the Main menu.

Section 4.0 - Serial Interface tells how to display the Main menu. The Main menu looks like this.

```
SmartSCAN NG2
01/18/2022 13:13:28 EST
Main Menu – Comm
-----------------------------------
                  .
                  .
                  .

[J] - Event log
[K] - System Functions Menu
[L] - Replay train
[M] - Security Menu
[X] – Exit
```

12 Select the System Functions menu.

The System Functions menu appears. The Auto-Calibration option is used to calibrate the system's pyrometer interface circuitry.

```
                  .
                  .
                  .
[E] - 1KHz Test Tone
[F] - Auto-Calibration
[G] - Reboot System
[H] - Delete All Stored Train Data
[I] - Clear Event Log
[K] - Update Menu
[L] - Maintenance Menu
[M] - Volume up (3)
[N] - Volume down (3)
[O] - Web security settings
[X] - Exit
```

13 Select Auto-Calibration to initiate process.

The SmartScanNG² system will now calibrate itself. Follow along on your interface screen until you see "Auto-Calibration Disengaged." This message is an indication that the system is done with the calibration procedure. To abort the process, press **[Esc]** (on your computer) or remove the heat source (from the scanner).

14 When "Auto-Calibration Disengaged" is displayed on your computer, remove the calibrated heat source.

15 To return to the Main menu, type **X**.

16 To exit the serial interface and return the system to normal operation, type **X**.

17 Store the calibrated heat source and its cable in the wayside enclosure.

NOTE:

Upon completion of autocalibration, the system acquires the scanner resistor temperature baseline values. The process begins with a 20-minute wait period in which the resistors are allowed to cool down. The system counts down during this period, sounding a tone each minute. After the 20-minute cooldown period, the system opens and closes the shutters for a period of 8 minutes.

Covering the apertures of all four scanners during the baseline acquisition routine should result in a more accurate baseline measurement because the reference for the scanner is stable when covered. See **Appendix K** for a detailed explanation and instructions.

E.2 Wheel Scanners

STC recommends that you use the calibrated heat source (2100-810NG) only when the outside (ambient) temperature is above 0°F (-18°C) and below 90°F (32°C). If you must use it at other times, do so only when the needle is centered on the front of the temperature meter. If the needle isn't stabilized within ± 2-degrees of set point, the heat source isn't operating properly.

To calibrate the type2 wheel scanners:

1. Be sure that you have on hand an STC calibrated heat source (2100-810NG) and a laptop computer.
2. On the control panel of the calibrated heat source, toggle the **Gating** switch off.
3. Plug the proper end of the supplied 50-foot (15.2-meter) power cord into the **six**-contact circular connector on the front of the calibrated heat source.
4. Plug the other end of the power cord into a grounded three-wire 110-120 VAC outlet in the wayside enclosure.

   The function connector that is not being used has live AC present.

5. Cover the function connector that is not being used with the supplied dust cover.
6. On the control panel, turn the temperature knob to **180**.
7. Put the heat source in a shady area, out of direct sunlight.
8. Wait about 8 minutes for the heat source to reach operating temperature and stabilize.

   The heat source has reached operating temperature and stabilized when the temperature meter needle remains centered.

   Once the temperature stabilizes, calibration may begin. Once stabilized, the temperature will change less than plus-or-minus one degree Fahrenheit.

9. Remove the attenuation plug from the wheel scanner.

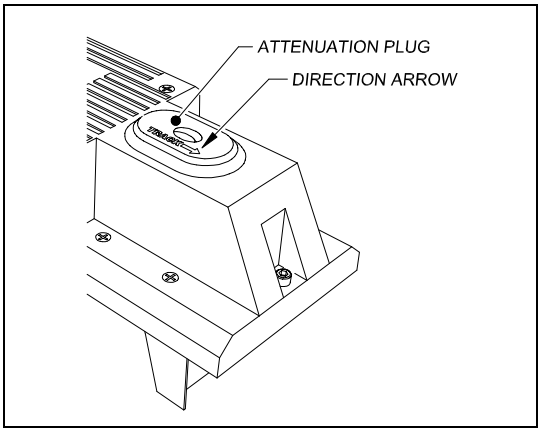

10. With the power cord to the front of the scanner, place the calibrated heat source on the scanner.

11 Be sure that a computer is plugged into COM1 (on the side of the Controller module), that it is turned on, that it has appropriate communications software installed, that the communications software is set to use full-duplex, that the baud rate is set to 19,200, and that a LOG file is opened.

12 Using the serial interface, display the Main menu.

Section 4.0 - Serial Interface tells how to display the Main menu. The Main menu looks like this.

```
SmartSCAN NG2
01/18/2022 13:13:28 EST
Main Menu – Comm
-----------------------------------
                  .
                  .
                  .
[J] - Event log
[K] - System Functions Menu
[L] - Replay train
[M] - Security Menu
[X] – Exit
```

13 Select the System Functions menu.

The System Functions menu appears. The Auto-Calibration option is used to calibrate the system's pyrometer interface circuitry.

```
                  .
                  .
                  .
[E] - 1KHz Test Tone
[F] - Auto-Calibration
[G] - Reboot System
[H] - Delete All Stored Train Data
[I] - Clear Event Log
[K] - Update Menu
[L] - Maintenance Menu
[M] - Volume up (3)
[N] - Volume down (3)
[O] - Web security settings
[X] – Exit
```

14 Select Auto-Calibration to initiate the process.

The SmartScanNG² system will now calibrate itself. Follow along on your interface screen until you see "Auto-Calibration Disengaged." This message is an indication that the system is done with the calibration procedure. To abort the process, press **[Esc]** (on your computer) or remove the heat source (from the scanner).

15 When "Auto-Calibration Disengaged" is displayed on your computer, remove the calibrated heat source.

16 To return to the Main menu, type **X**.

17 To exit the serial interface and return the system to normal operation, type **X**.

18 Replace the attenuation plug.

The attenuation plug has a direction arrow molded into the top of the plug. This arrow should be pointing toward the rail.

19 Store the calibrated heat source and its cable in the wayside enclosure.

NOTE:

Upon completion of autocalibration, the system acquires the scanner resistor temperature baseline values. The process begins with a 20-minute wait period in which the resistors are allowed to cool down. The system counts down during this period, sounding a tone each minute. After the 20-minute cooldown period, the system opens and closes the shutters for a period of 8 minutes.

Covering the apertures of all four scanners during the baseline acquisition routine should result in a more accurate baseline measurement because the reference for the scanner is stable when covered. See **Appendix K** for a detailed explanation and instructions.

Appendix F
Calibration of Type III Scanners

The SmartScanNG² system self-calibrates its pyrometer interface circuitry. You need only put a preheated calibrated heat source on a scanner and place the system in autocalibration mode. The system then scans all pyrometer inputs until the signal from the calibrated heat source is located. The necessary adjustments to the related interface circuitry are automatically made while the system monitors its own progress by analyzing changes in the heat signals. Once the procedure has been completed, autocalibration mode is disengaged, and the calibration results are displayed on your computer.

This appendix tells how to use the calibrated heat source to calibrate the scanners.

F.1 Bearing Scanners

STC recommends that you use the calibrated heat source (2100-810NG) only when the outside (ambient) temperature is above -18°C (0°F) and below 32°C (90°F). If you must use it at other times, do so only when the needle is centered on the front of the temperature meter. If the needle isn't stabilized within ± 2 degrees of setpoint, the heat source isn't operating properly.

To calibrate a bearing scanner:

1. Be sure that you have on hand an STC calibrated heat source (2100-810NG) and a laptop computer.
2. On the control panel of the calibrated heat source, toggle the **Gating** switch off.
3. Plug the proper end of the supplied 50-foot (15-meter) power cord into the **six-contact** circular connector on the front of the calibrated heat source.

   Sixty Hz is critical for proper operation. For a site that doesn't have a 120-volt 60-Hz power source, the heat source should be powered from a true sine wave inverter capable of 250 watts with an output of at least 110 volts at 60 Hz. The inverter should operate from an input voltage of 10.5 VDC to 15 VDC. A 120-volt USA socket should be provided to match the heat source power cord. The inverter should be grounded according to the manufacturer's recommendations.

   WARNING

   Once plugged in, both function connectors will have live AC present.

4. Using the supplied dust cap, cover the function connector that isn't being used.
5. Plug the other end of the power cord into the 120-volt USA socket.
6. On the control panel of the calibrated heat source, turn the temperature knob to **180°**.

7 Put the heat source in a shady area, out of direct sunlight and out of the wind.

8 Wait about 8 minutes for the heat source to reach operating temperature and stabilize.

The heat source has reached operating temperature and stabilized when the temperature meter needle remains centered.

Once the temperature stabilizes, calibration may begin. Once stabilized, the temperature will change less than plus-or-minus one degree Fahrenheit.

9 With the power cord to the front of the scanner, place the calibrated heat source on the bearing scanner.

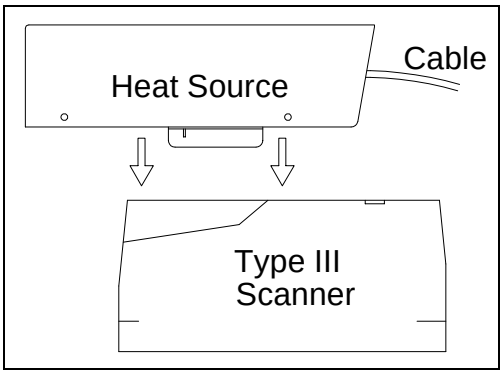

10 To prepare your computer:

a Plug your computer into COM1 using a crossover (null-modem) cable.

b Turn on your computer.

c Be sure that your computer has installed communications software, that it is set to use full-duplex, and that the baud rate is set to 115,200.

11 Using the serial interface, display the Main menu.

The Main menu looks like this.

```
SmartSCAN NG2
01/18/2022 13:13:28 EST
Main Menu – Comm
-----------------------------------
                  .
                  .
                  .
[J] - Event log
[K] - System Functions Menu
[L] - Replay train
[M] - Security Menu
[X] – Exit
```

12 Select **Auto-calibration** to calibrate the system's pyrometer interface circuitry.

The SmartScanNG² system will now calibrate itself. **Follow along on your computer screen until you see "Auto-Calibration Disengaged."** This message is an indication that the system is done with the calibration procedure. To abort the process, press **[Esc]** on your computer <u>or</u> remove the heat source from the bearing scanner.

```
                    .
                    .
                    .
  [E] - 1KHz Test Tone
  [F] - Auto-Calibration
  [G] - Reboot System
  [H] - Delete All Stored Train Data
  [I] - Clear Event Log
  [K] - Update Menu
  [L] - Maintenance Menu
  [M] - Volume up (3)
  [N] - Volume down (3)
  [O] - Web security settings
  [X] - Exit
```

On your computer screen, an acceptable calibration looks like this. Your values will be different.

```
Auto Calibration Selected
Scanner Types
-----------------------------------------------------------------------
Rail-1..................... Type-II   Rail-2.................... Type-III
Wheel-1.................... Type-III  Wheel-2................... Type-II

Is this correct ?

Signal levels in millivolts with closed shutters
    Rail1            Rail2            Wheel1           Wheel2
Min/Max/Average  Min/Max/Average  Min/Max/Average  Min/Max/Average
 0   80    20     0   60    20     0   60    20     20  80    40

Opening the shutters.
Scanning for heat source. Press the 'Esc' key to abort.
Located 187F heat source at Rail1. Auto-calibration beginning in 0 secs.

.......Auto-Calibration Engaged.......

Testing Digital-Pot U-306. Stand by.
Digital-pot checks OK.
Previous calibrated digital-pot. setting was 38.
Adjusting digital-pot.
Temp = 225F  Pot = 59  Sec =   1   Pot. decremented by 1 step.
Temp = 224F  Pot = 58  Sec =   1   Pot. decremented by 1 step.
Temp = 221F  Pot = 57  Sec =   2   Pot. decremented by 1 step.
Temp = 219F  Pot = 56  Sec =   3   Pot. decremented by 1 step.

            .
            .

Temp = 183F  Pot = 35  Sec =  15   Pot. decremented by 1 step.
Temp = 182F  Pot = 34  Sec =  18   Pot. decremented by 1 step.
Temp = 181F  Pot = 33  Sec =  29   Pot. decremented by 1 step.
Temp = 179F  Pot = 33  Sec =  93   Monitoring heat source temperature.
Rail1 digital-pot setting of 33 was stored in EEPROM.
East Rail Scanner Calibration complete.
The setpoint is 180F. The calibrated temp. is 179F.
Closing the shutters.
Resistor test pending.

.......Auto-Calibration Disengaged.......
```

Before the shutters are opened, if you get a signal level greater than 200 millivolts, it usually means that there is noise on the scanner inputs, which most times is caused by an electrical problem with the scanner. If you cannot isolate and fix the cause of this problem, call STC for help.

```
Auto Calibration Selected

Signal levels in millivolts with closed shutters
    Rail1            Rail2            Wheel1           Wheel2
Min/Max/Average  Min/Max/Average  Min/Max/Average  Min/Max/Average
210 250    210     0   60    20     0   60    20     20  80    40

            .
            .
            .
```

Before the shutters are closed, if you don't get a calibrated temperature in the range 178°F to 182°F, it means that the scanner wasn't calibrated. If cleaning the optics doesn't solve your problem, replace the scanner cover-and-module assembly. If this doesn't solve your problem, call STC for help in fixing the problem.

13 When "Auto-Calibration Disengaged" is displayed on your computer, remove the calibrated heat source.

14 To return to the Main menu, type **X**.

15 To exit the serial interface and return the system to normal operation, type **X**.

16 Store the calibrated heat source and its power cord in the wayside enclosure.

NOTE:

Upon completion of autocalibration, the system acquires the scanner resistor temperature baseline values. The process begins with a 20-minute wait period in which the resistors are allowed to cool down. The system counts down during this period, sounding a tone each minute. After the 20-minute cooldown period, the system opens and closes the shutters for a period of 8 minutes.

Covering the apertures of all four scanners during the baseline acquisition routine should result in a more accurate baseline measurement because the reference for the scanner is stable when covered. See **Appendix J** for a detailed explanation and instructions.

F.2 Wheel Scanners

STC recommends that you use the calibrated heat source (2100-810NG) only when the outside (ambient) temperature is above -18°C (0°F) and below 32°C (90°F). If you must use it at other times, do so only when the needle is centered on the front of the temperature meter. If the needle isn't stabilized within ± 2 degrees of setpoint, the heat source isn't operating properly.

To calibrate a wheel scanner:

1. Be sure that you have on hand an STC calibrated heat source (2100-810NG) and a laptop computer.
2. On the control panel of the calibrated heat source, toggle the **Gating** switch off.
3. Plug the proper end of the supplied 50-foot (15-meter) power cord into the **six-contact** circular connector on the front of the calibrated heat source.

   Sixty Hz is critical for proper operation. For a site that doesn't have a 120-volt 60-Hz power source, the heat source should be powered from a true sine wave inverter capable of 250 watts with an output of at least 110 volts at 60 Hz. The inverter should operate from an input voltage of 10.5 VDC to 15 VDC. A 120-volt USA socket should be provided to match the heat source power cord. The inverter should be grounded according to the manufacturer's recommendations.

   WARNING

   Once plugged in, both function connectors will have live AC present.

4. Using the supplied dust cap, cover the function connector that isn't being used.
5. Plug the other end of the power cord into the 120-volt USA socket.
6. On the control panel of the calibrated heat source, turn the temperature knob to **180°**.
7. Put the heat source in a shady area, out of direct sunlight and out of the wind.
8. Wait about 8 minutes for the heat source to reach operating temperature and stabilize.

   The heat source has reached operating temperature and stabilized when the temperature meter needle remains centered.

   Once the temperature stabilizes, calibration may begin. Once stabilized, the temperature will change less than plus-or-minus one degree Fahrenheit.

9 Replace the red filter frame with the black one during calibration.

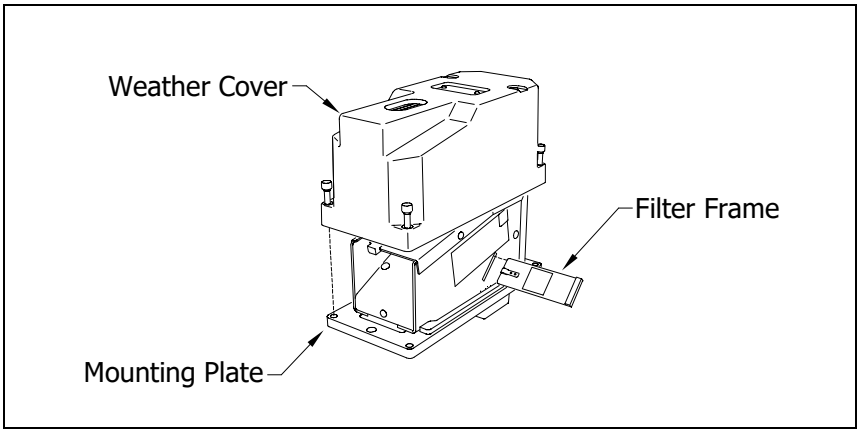

You'll need to remove the weather cover before you can replace the filter frame. Four socket head cap screws attach the weather cover to the mounting plate. Before continuing, be sure that the black filter frame is securely in place and that the four socket-head-cap screws on the weather cover are completely tight.

10 With the power cord to the front of the scanner, place the calibrated heat source on the wheel scanner.

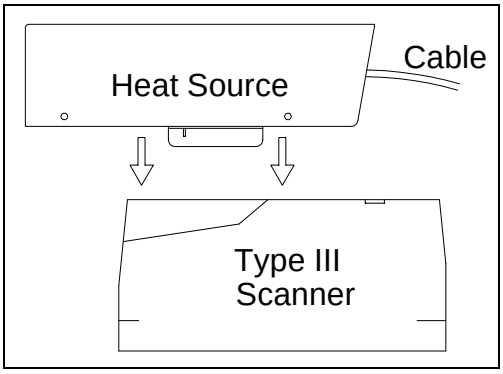

11 To prepare your computer:

a Plug your computer into COM1 using a crossover (null-modem) cable.

b Turn on your computer.

c Be sure that your computer has installed communications software, that it is set to use full-duplex, and that the baud rate is set to 115,200.

12 Using the serial interface, display the Main menu.

The Main menu looks like this.

```
SmartSCAN NG2
01/18/2022 13:13:28 EST
Main Menu – Comm
-----------------------------------
                  .
                  .
                  .
[J] - Event log
[K] - System Functions Menu
[L] - Replay train
[M] - Security Menu
[X] – Exit
```

13 Select the **Auto-Calibration option** to calibrate the system's pyrometer interface circuitry.

The SmartScanNG² system will now calibrate itself. **Follow along on your computer screen until you see "Auto-Calibration Disengaged."** This message is an indication that the system is done with the calibration procedure. To abort the process, press **[Esc]** on your computer <u>or</u> remove the heat source from the wheel scanner.

Before the shutters are opened, if you get a signal level <u>greater</u> <u>than</u> 200 millivolts, it usually means that there is noise on the scanner inputs, which most times is caused by an electrical problem with the scanner. If you cannot isolate and fix the cause of this problem, call STC for help.

```
                  .
                  .
                  .
[E] - 1KHz Test Tone
[F] - Auto-Calibration
[G] - Reboot System
[H] - Delete All Stored Train Data
[I] - Clear Event Log
[K] - Update Menu
[L] - Maintenance Menu
[M] - Volume up (3)
[N] - Volume down (3)
[O] - Web security settings
[X] - Exit
```

Before the shutters are closed, if you don't get a calibrated temperature in the range 178°F to 182°F, it means that the scanner wasn't calibrated. If cleaning the optics doesn't solve your problem, replace the scanner cover-and-module assembly. If this doesn't solve your problem, call STC for help in fixing the problem.

14 When "Auto-Calibration Disengaged" is displayed on your computer, remove the calibrated heat source.

15 To return to the Main menu, type **X**.

16 To exit the serial interface and return the system to normal operation, type **X**.

17 Replace the black filter frame with the red one immediately following the successful completion of the auto-calibration function.

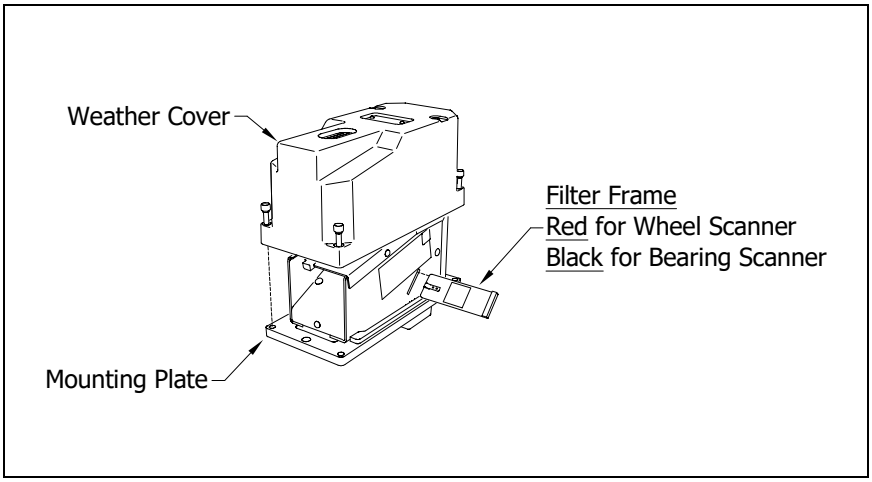

**** Before continuing, be sure that the red filter frame is securely in place and that the four socket-head-cap screws on the weather cover are completely tight. ****

18 Store the calibrated heat source and its power cord in the wayside enclosure.

NOTE:

Upon completion of autocalibration, the system acquires the scanner resistor temperature baseline values. The process begins with a 20-minute wait period in which the resistors are allowed to cool down. The system counts down during this period, sounding a tone each minute. After the 20-minute cooldown period, the system opens and closes the shutters for a period of 8 minutes.

Covering the apertures of all four scanners during the baseline acquisition routine should result in a more accurate baseline measurement because the reference for the scanner is stable when covered. See **Appendix J** for a detailed explanation and instructions.

Appendix G
Lens Cleaning of Type III Scanners

This appendix tells how to clean the optics in the scanners.

To clean the optics in the scanners:

1 Be sure that you have on hand a T-handle 1/4-inch hex-wrench.

2 Turn off all power to the scanners.

This requires turning off the DC power switch on the SmartScanNG² enclosure and unplugging the AC power cord on the bottom of the SmartScanNG² enclosure.

3 Using the T-handle 1/4-inch hex-wrench, loosen the four socket-head-cap screws that attach the weather cover to the mounting plate.

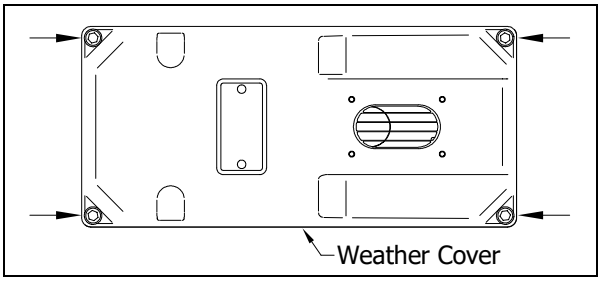

4 Remove the weather cover from its mounting plate.

Be careful not to damage the electrical connection for the cover heaters.

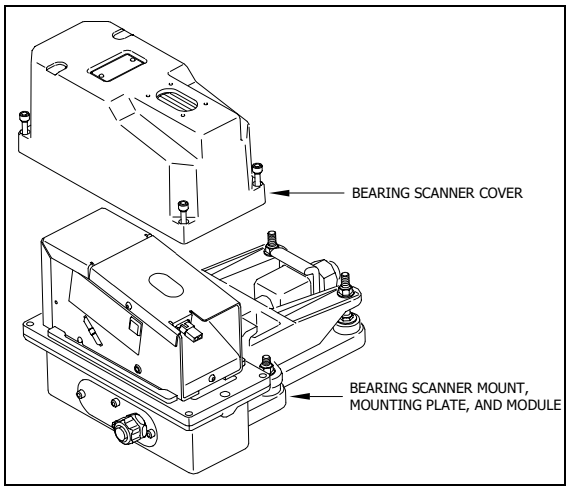

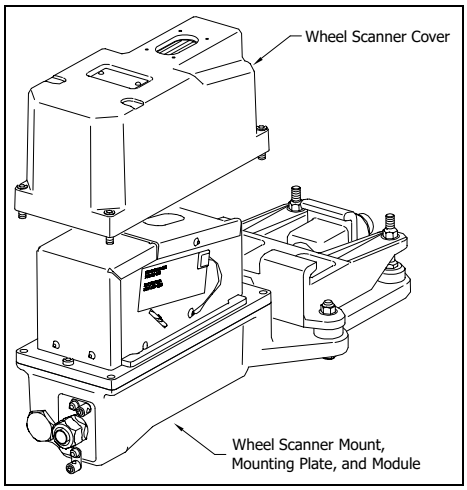

5 Disconnect the heater wiring plug.

On the side of the scanner module, you'll find a metal tab that protrudes about 1/4 inch outside the module.

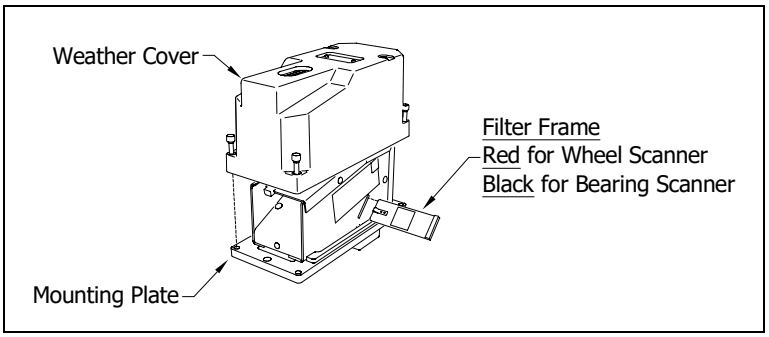

6 Grasp the tab and pull the filter frame out of the scanner module.

7 Using the brush supplied with the tool kit, lightly dust any excess material from the filter frame glass.

Be careful not to abrade or scratch the surface of the lens.

8 Apply a small amount of Vallen V8L cleaning solution (included in the tool kit) directly to the glass filter to loosen any remaining contamination.

9 Gently polish the reflective glass surface of the filter to remove any remaining contamination.

Pay close attention to the area around the perimeter of the lens. It is important that the entire surface of the lens is clean.

10 Open the shutter by stroking one of the gating transducers with a piece of ferrous metal.

11 If the lens surface appears to have any dust on it, insert the brush from the tool kit through the baffle plates until it contacts the lens surface and apply a twisting motion to dislodge any accumulated dust.

12 Remove the brush and visually inspect the lens for cleanliness.

13 Reinstall the filter frame assembly properly - (The reflective surface will be facing the viewport opening of the scanner). Reconnect the heater wiring plug.

14 Re-connect the scanner cover heater.

15 If this is a **bearing scanner**:

With the hole on top of the bearing scanner cover facing north or east, set the weather cover back onto its mounting plate. Using the T-handle 1/4-inch hex-wrench, uniformly tighten the four socket-head-cap screws.

16 If this is a **wheel scanner**:

With the hole on top of the wheel scanner cover facing the center of the track, set the weather cover back onto its mounting plate. Using the T-handle 1/4-inch hex-wrench, uniformly tighten the four socket-head-cap screws.

17 Turn on power to the scanners.

Appendix H
Predictive Gate Scanning

This appendix describes predictive gate scanning of bearings.

H.1 Overview

If a pyrometer is exposed to extreme infrared energy emission, the device itself can be driven into a saturated state. When this happens, it is blinded to subsequent changes in infrared energy emission. This blinded state can last up to 1-1/2 seconds.

Under certain circumstances, a pyrometer may be driven into saturation before the opening of the gate for a given axle. If the open-gate period was the only time during which pyrometer readings were sampled and processed, the system might miss an overheated bearing due to a device that was blinded before the opening of the gate. This can happen when a bearing is so overheated that it gives off infrared energy that can be seen by the pyrometer long before the bearing enters the pyrometer's field of view.

To compensate for this, the SmartScanNG² system includes special logic for processing heat seen by the pyrometers as they scan between the axle gates. The interval between axles has been divided into two parts.

The first part of this interval is the 16 inches (40.6 centimeters) that immediately precede the axle as it approaches the bearing scanners. This interval is treated as a "predictive gate" region in which the actual gate period (the time a bearing is physically in the pyrometer's field of view) is extended by 16 inches (40.6 centimeters). The remainder of the "between gate" interval forms the second part. Heat values read during this second interval are ignored.

The figure below depicts the three distinct scanning intervals (the in-gate period plus the two between-gate intervals).

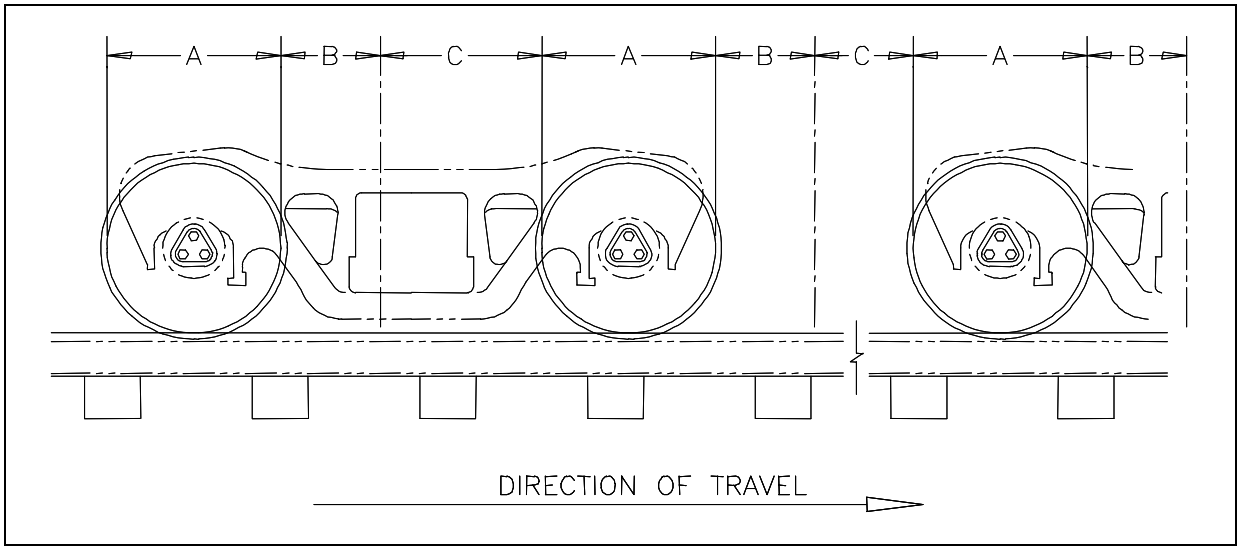

The table below defines the intervals.

Interval	Description
A	The normal bearing scanning interval of about 24 inches (61 centimeters), depending on the transducer spacing.
B	A distance of about 16 inches (40.6 centimeters) before a given wheel.
C	The distance between wheels that doesn't fall within interval-B.

H.2 Scanning Process

Interval-A is the normal bearing scanning interval. Interval-B is an extension of interval-A. The greatest value read in either of these two intervals is recorded as the temperature for the axle. This value is checked for alarm levels in the same manner that scanned bearing temperatures are normally handled.

For interval-A: Heat values read during interval-A are processed normally.

For interval-B: Heat values read during interval-B that do not meet or exceed the Absolute alarm threshold are ignored. Values that meet or exceed the Absolute alarm threshold are handled as follows:

- If the interval-A heat value meets or exceeds the Absolute alarm threshold, it is processed normally, and the interval-B heat reading is ignored.
- If the interval-A heat value does not meet or exceed the Absolute alarm threshold, but interval-B heat value does, a Pyrometer Saturation alarm is flagged, and the interval-B heat value is stored and reported for the alarmed axle.

For interval-C: Heat values read during interval-C are ignored.

The Very Slow Train alarm indicates that, at some point during train passage, four consecutive axles crossed the gating transducers at a speed of 7 mph (11.3 kph) or less. The firmware doesn't check for Pyrometer Saturation alarms if the train has been flagged with a Very Slow Train alarm.

H.3 Reporting the Pyrometer Saturation Alarm

If a Pyrometer Saturation alarm is detected and assigned to an axle, a printed message will appear on Detail reports.

The figure below shows part of a Train Detail report with a Pyrometer Saturation alarm. The contents of your report will be different.

```
                        Southern Technologies Corporation
                         Next Generation Detector System
                                    TRAIN DETAIL
==============================================================================

                                          .
                                          .
                                          .

            Rail       Wheel
Car Axle East  West  East  West   ON   OFF PW1 PW2  Alarms
  1    1   58    30    98   102   35     0  16  17
       2   58    30    98   102   35    82  13  13
       3  219    30    98   102   35    85  13  13   East Rail Pyro Saturation Alarm
       4   58    30    98   102   35   839  13  13
       5   58    30    98   102   35    85  13  13
       6   58    30    98   102   35    85  13  13

  2    7   58    30    98   102   35   238  13  13
       8   58    30    98   102   34    85  13  13

                                          .
                                          .
                                          .
```

Appendix I
2500-402 Spacer Kit Installation

The 2500-402 Spacer Kit provides the hardware necessary to lower the Type III Hotwheel Scanner assembly by either ½” or 1” for those applications that require additional rail clearance.

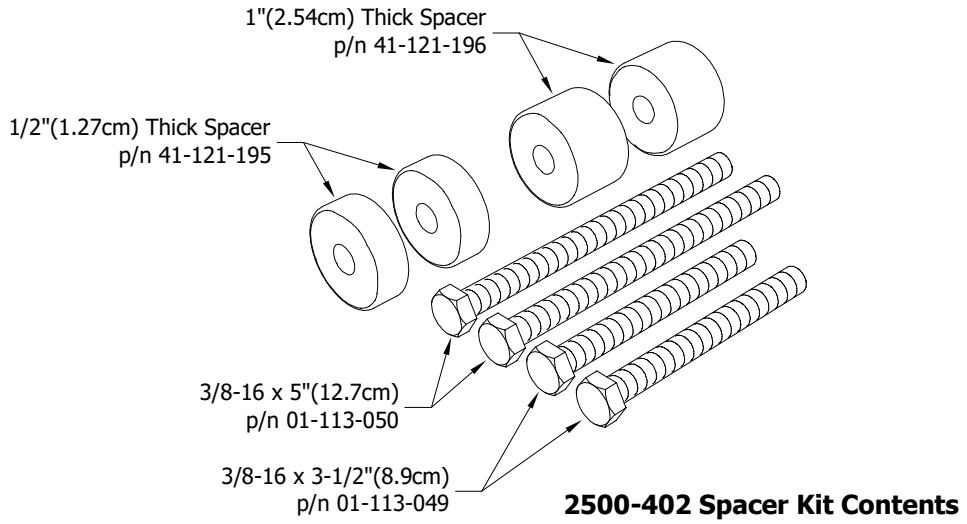

2500-402 Spacer Kit Contents

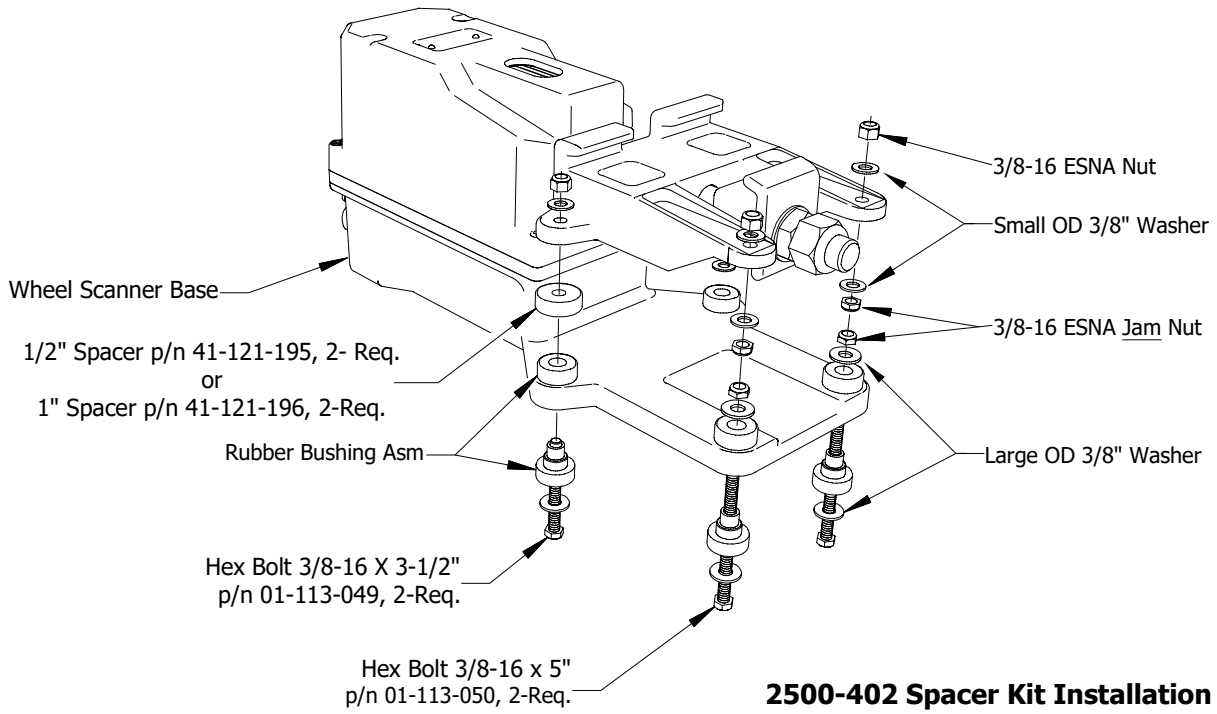

2500-402 Spacer Kit Installation

Appendix J
Scanner Resistor Baseline Acquisition

Upon completion of autocalibration, the system will acquire the scanner resistor temperature baseline values. The process begins with a 20-minute wait period in which the resistors are allowed to cool down. The system counts down during this period, sounding a tone each minute. After the 20-minute cooldown period, the system opens and closes the shutters for a period of 8 minutes.

NOTE: For wheel scanners, it is imperative that the red filter frame is replaced immediately after autocalibration has disengaged and before resistor baseline acquisition begins.

The reason for establishing the baseline tables at the end of the Auto-Cal cycle is the assumption that the system is then at its peak operating efficiency. The system is freshly calibrated and the lenses are clean. With the baselines established, the system can then recognize and compensate for slight degradations of the lens caused by moisture or dirt accumulation on the lens surface.

J.1 Bungalow Speaker Announcements

During the resistor-cooling period, the system announces through the speaker the following. These announcements aren't broadcast over the radio.

- A beep sounds once per minute until two minutes before the resistor test.
- At two minutes until the test, "Scanner resistor test beginning in 2 minutes" is voiced.
- At one minute until the test, "Scanner resistor test beginning in 1 minute" is voiced.

After the resistor cooling period:

- As the test begins, "Testing" is voiced. During this time, the word PENDING appears in the status column of the Resistor Data section.
- If the test was successful, "System working" is voiced. The word VALID appears in the status column of the Resistor Data section, signifying that the baseline test applies to each passing train.
- If the test wasn't successful, "Scanner resistor test beginning in two-zero minutes" is voiced, meaning that the system will try once more after 20 minutes to acquire an accurate resistor heat profile. During this time, the word PENDING appears in the status column of the Resistor Data section of the System Status Report. If the test fails a second time, the word INVALID appears in the same column. The system applies the interim integrity test to each passing train while either PENDING or INVALID appears.

J.2 Processing Resistor Baseline Results

Here are two rules the system uses:

- If any of the temperatures in the baseline table are less than or equal to 40°F, we consider the baseline to be invalid.
- The next sequential temperature has to increase or be no less than 6°F cooler than the last temperature. That is, if a temperature is 100°F, for example, the next temperature has to be greater than 100, equal to 100, but not less than 94.

If the system gets an invalid baseline, it will automatically try a second time. If it gets interrupted, it will also try a second time. The 300° F temperatures that show up in the baselines occasionally are more a reflection of the duty cycle controller for the shutter resistor. Some controllers cause the shutter resistors to heat up more quickly and sometimes overshoot the desired setpoint, whereas a controller that is operating at its optimum efficiency will ramp up to a value slightly below 300° F. Temperatures above 300° F do not result in an invalid baseline.

Look at the Resistor Data section of the System Status Report. INVALID indicates that the system has tried twice and could not acquire valid resistor data. If any of the baseline results for a scanner show INVALID, the only way to capture a new baseline is to run the Auto Cal process again. If the word PENDING appears in the status column, the system is waiting for the resistors to cool before acquiring resistor data or for the battery to charge to 13 volts. INVALID indicates that the system has tried twice and could not acquire valid resistor data. In either case, the system will apply the interim integrity test to passing trains, which doesn't require resistor baseline data.

Examples: Resistor Baseline Results

```
   Resistor Data
   ---------------------------------------------------------------------------
VOLTS AMB DATE     TIME  STATUS   30  40  50  60  70  80  90 100 110 120 130
     140 160 180 200 220 240 260 280 300 320 340 360 380 400 420 440 460 480
-----------------------------------------------------------------------------
RAIL 1
15.3 -008 01/11/12 12:53 INVALID 300,300,300,300,300,300,300,300,300,300,300
     300,300,300,300,300,300,300,300,300,300,300,300,300,300,300,300,300,300
RAIL 2
15.3 -008 01/11/12 12:53 INVALID 300,300,300,300,300,300,300,300,300,300,300
     300,300,300,300,300,300,300,300,300,300,300,300,300,300,300,300,300,300
WHEEL 1
15.3 -009 01/11/12 12:26 VALID   155,152,155,152,150,150,149,149,148,147,147
     148,149,150,149,150,151,150,151,151,151,151,151,150,151,152,152,152,154
WHEEL 2
15.3 -009 01/11/12 12:26 VALID   160,156,157,162,157,157,155,155,156,155,156
     154,156,157,158,157,158,157,158,158,160,160,158,158,160,160,160,160,158
=============================================================================
```

```
   Resistor Data
   ---------------------------------------------------------------------------
VOLTS AMB DATE     TIME  STATUS   30  40  50  60  70  80  90 100 110 120 130
     140 160 180 200 220 240 260 280 300 320 340 360 380 400 420 440 460 480
-----------------------------------------------------------------------------
RAIL 1
13.4  057 09/30/11 11:59 INVALID 285,285,289,294,289,288,289,288,287,287,288
     287,289,290,290,272,270,277,294,297,297,297,298,300,300,300,300,300,300
RAIL 2
13.4  055 09/30/11 10:50 VALID   272,271,274,280,277,275,270,264,262,264,271
     277,278,282,284,285,287,283,280,272,271,270,269,268,269,270,268,269,271
WHEEL 1
13.4  055 09/30/11 10:50 VALID   145,148,154,155,156,157,156,156,157,160,158
     160,160,162,161,164,162,164,168,163,158,163,160,167,168,171,171,167,169
WHEEL 2
13.4  055 09/30/11 10:50 VALID   128,132,137,137,138,137,141,138,138,141,140
     141,142,142,144,144,145,148,147,147,148,147,147,148,147,148,149,150,151
=============================================================================
```

```
   Resistor Data
   ---------------------------------------------------------------------------
VOLTS AMB DATE     TIME  STATUS   30  40  50  60  70  80  90 100 110 120 130
     140 160 180 200 220 240 260 280 300 320 340 360 380 400 420 440 460 480
-----------------------------------------------------------------------------
RAIL 1
13.5  061 05/25/11 15:25 VALID   242,251,258,263,264,265,267,268,268,270,271
     272,275,277,278,280,281,283,284,284,284,285,287,287,288,287,287,287,289
RAIL 2
13.5  061 05/25/11 15:25 VALID   262,268,274,282,282,282,282,283,284,285,285
     288,289,291,294,296,297,297,298,300,300,300,300,300,300,300,300,300,300
WHEEL 1
13.7  063 06/27/11 14:09 INVALID 112,116,117,117,116,116,114,114,112,112,111
     110,112,111,112,114,110,104,100, 96, 94, 85, 87, 76, 69, 63, 61, 63, 58
WHEEL 2
13.7  063 06/27/11 14:09 INVALID 135,  2,  2,  2,  2,  2,148,  2,  2,  2,  2
       2,  2,  2,  2,  2,  2,  2,  2,  2,  2,  2,  2,  2,  2,  2,  2,  2,  2
=============================================================================
```

Appendix K Communications Ports

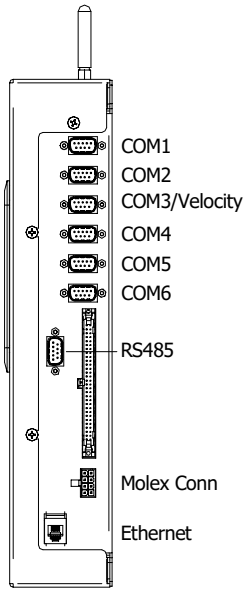

NOTE: The factory default setting for serial ports COM1-COM6 is 19,200 baud. The default setting for the RS485 port is 9,600 baud.

COM1 – To use the serial interface, connect a local computer (DTE) using a null-modem cable and set the communications software to use full-duplex.
This is the standard local access port.

COM2, COM3, & COM4 - Currently unused.

COM5 – At systems with AEI, attach a null-modem cable from the AEI (DTE) Interface Module to COM5 (DTE) of the Controller module.

COM6 – Used to load a software update package onto the NG².

RS485 – Used to communicate with auxiliary equipment such as wind monitor.

ETHERNET – To establish an Ethernet connection, you need a network interface card (NIC) in your computer and a Category 5 (CAT5) 8-wire network cable for basic 10/100 functionality.

DCE (Data Circuit-Terminating Equipment) Modem				Connecting Cable	DTE (Data Terminal Equipment) Computer			Connecting Cable	DTE (Data Terminal Equipment) Computer		
Pins on the Modem		Name and Abbreviation		Inside the Straight-Through Connecting Cable	Abbr.	Pins on the Computer		*Inside the Null-Modem Connecting Cable	Abbr	Pins on the Computer	
Female DB25	DB9					Male DB25	DB9			Male DB25	DB9
1	-	Frame Ground (Chassis)	FG		FG	1	-		FG	1	-
2	3	Transmitted Data (TD)	TxD		TxD	2	3		TxD	2	3
3	2	Received Data (RD)	RxD		RxD	3	2		RxD	3	2
4	7	Request to Send	RTS		RTS	4	7		RTS	4	7
5	8	Clear to Send	CTS		CTS	5	8		CTS	5	8
6	6	Data Set Ready	DSR		DSR	6	6		DSR	6	6
7	5	Signal Ground	SG		SG	7	5		SG	7	5
8	1	Data Carrier Detect	DCD or CD		DCD or CD	8	1		DCD or CD	8	1
20	4	Data Terminal Ready	DTR		DTR	20	4		DTR	20	4
22	9	Ring Indicator	RI		RI	22	9		RI	22	9

Index

This section lists the page numbers for keywords and phrases used in this guide.

1

19,200 baud · 247
1KHz test tone · 80

A

Absolute alarm · 17, 238
Absolute option · 17, 126, 133, 141, 147, 163, 198
AEI Diagnostic Detail report · 97, 123, 160, 167, 168
AEI option · 47, 62, 125, 127, 129, 130, 135, 140, 142, 143, 144, 149, 152, 159, 160, 165
AEI Reader Parameters · 66, 68
AEI tags · 127, 135, 142, 149, 165
alarm
- Absolute · 17, 38, 238
- Carside Slope · 14, 17, 43, 48, 49, 126, 129, 130, 134, 141, 143, 144, 148, 152, 160, 164, 172
- Cold Rail · 40, 41, 126, 133, 141, 147, 163, 197, 198, 199, 205, 206, 208
- Cold Resistor · 40, 41, 133, 147, 163, 198, 199, 200, 208, 209
- Cold Wheel Scanner · 40, 134, 148, 164, 199, 200, 206, 209, 210
- Dead Battery · 205
- Dead Resistor · 205
- Dead Wheel Scanner Resistor · 206
- Differential · 17, 39
- Dragging Equipment · 21, 45, 46
- Exception · 62, 135, 136, 140, 142, 149, 150
- High-Load · 21, 46
- Highrange Transducer Miscounts · 58, 60, 200, 206
- Hotbox · 16, 133, 147, 163
- Hotbox alarm · 172, 174, 175
- Hotwheel · 21, 39, 47, 125, 129, 133, 134, 140, 143, 147, 148, 150, 163, 164
- Integrity Failure · 201, 208
- Low Battery · 201
- Midrange Transducer Miscounts · 201
- No Approach Track · 182, 201
- Pyrometer Noise Filtered Rail · 201
- Pyrometer Noise Filtered Wheel · 202
- Pyrometer Saturation · 17, 238, 239
- Reverse Direction Detected · 202
- Short Train · 202
- Stuck Dragger During Train Passage · 207
- Stuck Dragger Pretrain · 207
- Stuck Dragger Recovered · 202
- Stuck High Load Detector Pretrain · 21, 207
- Stuck Wide Load Detector Pretrain · 22, 207
- Successive Cold Rails Exceeded · 40, 198, 208
- Successive Cold Resistors Exceeded · 40, 41, 199, 208

Successive Cold Wheel Resistors Exceeded · 40, 200, 210
Successive Cold Wheels Exceeded · 40, 199, 209
Test Train · 203
Train Present on Restart · 210
Very Slow Train · 58, 60, 185, 200, 203, 206, 239
Wide-Load · 22, 45, 46
Alarm Settings menu · 21, 38, 39, 40, 41, 43, 44, 126, 133, 134, 141, 147, 148, 150, 158, 163, 164, 197, 198, 199, 200, 206, 208
alignment · 177, 178
ambient temperature · 17, 19, 21, 38, 39, 41, 50, 52, 58, 59, 88, 127, 132, 134, 142, 146, 148, 158, 162, 164, 198
ancillary messages · 58, 173
Announce Axles option · 14, 59
Announce Car Identification option · 62
Announce Customer Name option · 61
Announce Left-Right Alarm Reference option · 62
Announce Number of Cars option · 14, 61
Announce Power Off option · 60
Announce Slow Train option · 14, 60
Announce Speed option · 14, 59
Announce Temperature option · 59
Announce Train Arrival option · 62
Announce Train Length option · 14, 60
antenna · 135, 149, 165
arrival message · 62
attenuation plug · 211, 222, 224
autocalibration · 27, 52, 81, 88, 159, 191, 219, 221, 223, 224, 225, 227, 229, 232, 233
Auxiliary alarms · 21
Axle Alarm Summary · 135, 149
axle count · 14, 58, 185, 186, 189, 200, 203, 206
axle number · 136, 150, 166
Axle Scanning · 16

B

ballast · 178
baseline resistor integrity · 87, 133, 135, 147, 149, 163, 165
battery charger · 179, 180, 181, 194
battery temperature probe · 179
baud rate · 30, 226, 231
bearing scanners · 7, 13, 17, 18, 21, 127, 132, 136, 142, 146, 150, 162, 185, 211, 215, 237

C

calibrated heat source · 27, 225, 226, 229, 230, 231, 233
Clear Event Log option · 83, 169
clearance mode · 50
clearance type · 50
COM1 · 30, 71, 123, 220, 223, 226, 231, 247
COM3 · 29
COM5 · 247
correction factor · 19, 133, 135, 147, 149, 163, 165

D

Date and Time · 34, 127, 132, 142, 146, 158, 162
default setup parameters · 69, 70

Delete All Stored Train Data option · 82
double-track site · 173
Dragger option · 21, 46
DTMF · 64, 69

E

Equipment Settings menu · 17, 21, 22, 33, 39, 43, 44, 45, 46, 47, 48, 49, 50, 51, 52, 53, 54, 57, 62, 125, 126, 127, 129, 130, 134, 135, 136, 140, 141, 142, 143, 148, 149, 158, 159, 160, 164, 165, 166
error message · 64, 65
Event Log · 83, 97, 117, 123, 169, 170
Exception Detail report · 123, 140, 143, 144, 145, 151, 152, 154
Exception Summary report · 123, 140, 143
Exceptions directory · 82, 140, 142, 146

F

float voltage · 180, 181, 194, 201, 205
fuse block · 179, 180

G

Gate Distance option · 45, 52
gating transducers · 13, 14, 15, 16, 17, 19, 20, 52, 136, 150, 166, 182, 185, 186, 193, 200, 201, 203, 206, 239

H

heaters · 13, 50, 51, 235

I

Integrity Failure · 173

K

keypad · 24

L

Lens Cleaning · 235

M

Main menu · 226, 229, 232, 233
Maintenance email list · 86
milepost/kilometer post · 35
modem · 226, 231
mounting plate · 216, 217, 218, 231, 235, 236

N

Network Menu · 27
Network Settings · 68, 72, 74, 75

O

OLED · 24
optics · 229, 232, 235

P

Processor board · 23
pyrometer · 27, 225, 227, 232

R

Radio Inhibit · 79
Radio Test · 26, 77
Remote System Reset · 81
Replay train · 93
reports
- Abbreviated Exception Detail · 152
- AEI Diagnostic Detail · 160
- Event Log · 169
- Exception Detail · 143, 173
- Exception Summary · 140
- System Status · 156
- Train Detail · 129
- Train Summary · 125

S

scanner cover · 215, 216, 217, 218, 229, 232, 236
Security Menu · 95
serial interface · 226, 229, 232, 233
Setup menu · 32
shutters · 221, 224, 228, 229, 232, 233
single-track site · 174, 175
Start Manual Train · 79
System Functions menu · 26, 76
system health menu · 25
System Status report · 156
system warning · 23

T

Train Detail report · 129
Train Summary report · 125

U

units of measure · 68
Update Menu · 83

V

View maintenance statistics · 84
Vocabulary Test · 78
Volume Menu · 28

W

wayside enclosure · 229, 233
Web security settings · 87, 88, 90
web user interface · 97
wheel scanners · 215
WiFi · 97