SMARTSCAN | NG²

Operator's Guide For Iowa Interstate Railway

EUD-2023016-00 Rev.1
16 January 2023

© 2023 Southern Technologies Corporation (STC). All rights reserved.
Printed in the USA.

Because products evolve and system configurations change, this manual may not be an exact representation of the products and systems that you are using.

Software Version at the time of this publication
IAIS_01-00 2022-10-24

STC assumes no responsibility for errors or omissions in this document. Nor does STC make any commitment to update the information contained herein.

Product and company names mentioned herein are trademarks or registered trademarks of their respective owners.

WARNING!

Contact with electrically active parts could result in sparks, burns, and electric shock. Because of this, you should avoid all electrical hazards when installing, wiring, operating, and maintaining the SmartScanNG² system. Failure to do so could result in damage to the equipment or severe injury to you.

NOTICE:

If equipped with an AEI subsystem, the user is required to obtain a Part 90 site license from the FCC to operate in the United States. See product label for the FCC ID number. Access the FCC Web site at www.fcc.gov/Forms/Form601/601.html for additional information concerning licensing requirements.

Users in all countries should check with the appropriate local authorities for licensing requirements.

Southern Technologies Corporation
6145 Preservation Drive
Chattanooga, TN 37416
www.southern-tech.com

email: stcemail@southern-tech.com

fax number: 423-499-0045
telephone number: 423-892-3029

Contents

This section lists the headings of this guide in sequential order with their page references.

Contents **3**
1.0 Introduction **7**
1.1 Purpose of This Guide 7
1.2 SmartScanNG² 7
1.3 Cautions 8
1.4 Disclaimers 8
1.5 How to Comment on This Guide 9
1.6 How to Order More Copies of This Guide 9
1.7 Standard Warranty 9
2.0 Defect Detection **11**
2.1 System Activation 11
2.2 System Deactivation 12
2.3 Speed Calculation 12
2.4 Train Direction 12
2.5 Transducer Pulse Processing 13
2.6 Axle Scanning 14
2.7 Hot Bearing Alarms 14
2.7.1 Bearing Scan Process 15
2.7.2 Referencing System 17
2.7.3 Pyrometer Linearity 17
2.8 Hotwheel Alarms 18
2.9 Auxiliary Alarms 19
2.10 SmartScanNG² Auxiliary Output (Aux Out) 20
3.0 Display Panel **21**
3.1 LED Indicators 21
3.2 Keypad & Display 22
3.3 System Health Menu 23
3.4 System Functions 24
3.4.1 Radio Test 24
3.4.2 Auto-Calibration 25
3.4.3 Network Menu 25
3.4.4 Radio Menu 25
3.4.5 Volume Menu 26
4.0 Serial Interface **27**
4.1 Main Menu 28
4.2 Setup Menu 30
4.2.1 Date and Time 32
4.2.2 Milepost/Kilometer Post (MP/KP) 34
4.2.3 Track Designation 35

4.2.4 Track Direction 35
4.2.5 Alarm Settings 36
4.2.6 Equipment Settings 44
4.2.7 Messages 56
4.2.8 AEI Reader Parameters 67
4.2.9 Load Default Setup Parameters 71
4.2.10 COM1, COM2, COM3, COM4, COM5, & COM6 73
4.2.11 Network Settings 74
4.2.12 Velocity Setting 75
4.3 System Functions Menu 75
4.4 Replay EOT Announcement 96
4.5 System Security 97
5.0 Web/WiFi User Interface 99
5.1 Train Data 101
5.2 System Status 102
5.3 Configuration 103
5.4 System Event Log 114
5.5 Maintenance Info 116
5.6 System Functions 117
5.7 Software Update 118
5.8 Scanner Auto Calibration 119
6.0 Producing Reports 121
6.1 Train Summary Report 123
6.2 Train Detail Report 127
6.3 Train Detail Report (Abbreviated) 135
6.4 Exception Summary Report 138
6.5 Exception Detail Report 141
6.6 Abbreviated Exception Detail Report 150
6.7 Last Train Report 153
6.8 Train DSRs 154
6.9 System Status Report 157
6.10 AEI Diagnostic Detail Report 163
6.11 Event Log Report 170
7.0 Radio Announcements 173
8.0 Scheduled Maintenance 187
9.0 Customer Service 205
9.1 Reaching STC 205
9.2 Returning Equipment for Repair 205
9.3 Reporting Problems or Suggestions 206
9.4 Ordering Spare Parts 206
9.5 Checking on Shipments and Orders 206
Appendix A System Alarms 207
A.1 Cold Rail Alarm 207
A.2 Cold Resistor Alarm 208
A.3 Cold Wheel Scanner Resistor Alarm 209
A.4 Highrange Transducer Miscounts Alarm 210
A.5 Integrity Failure Alarm 210

A.6 Low Battery Alarm 210
A.7 Midrange Transducer Miscounts Alarm 210
A.8 No Approach Track Alarm 211
A.9 Pyrometer Noise-Filtered Rail Alarm 211
A.10 Pyrometer Noise-Filtered Wheel Alarm 211
A.11 Reverse Direction Detected 211
A.12 Short Train Alarm 212
A.13 Stuck Dragger Recovered Alarm 212
A.14 Test Train Alarm 212
A.15 Very Slow Train Alarm 212
Appendix B Integrity Failures 213
B.1 Dead Battery Alarm 213
B.2 Dead Resistor Alarm 213
B.3 Highrange Transducer Miscounts Alarm 214
B.4 Stuck Dragger During Train Passage Alarm 214
B.5 Stuck Dragger Pretrain Alarm 214
B.6 Stuck High-Load Detector Pretrain Alarm 214
B.7 Stuck Wide-Load Detector Pretrain Alarm 215
B.8 Successive Cold Rails Exceeded Alarm 215
B.9 Successive Cold Resistors Exceeded Alarm 216
B.10 Successive Cold Wheel Resistors Exceeded Alarm 217
B.11 Train Present on Restart Alarm 217
Appendix C System Functions 219
C.1 Radio Test 220
C.2 Vocabulary Test 221
C.3 Radio Inhibit 221
C.4 Start Manual Train 221
C.5 1KHz Test Tone 221
C.6 Auto-Calibration 222
C.7 Remote System Reset 222
C.8 Delete All Stored Train Data 222
C.9 Clear Event Log 222
C.10 Update Menu 223
C.11 View maintenance statistics 223
C.12 Reset System Health 224
C.13 Maintenance email list 224
C.14 Volume up/Volume down 224
Appendix D Replacement of Type2 Scanners 225
D.1 Bearing Scanners 225
D.2 Wheel Scanners 227
Appendix E Replacement of Type3 Scanners 229
E.1 Bearing Scanners 229
E.2 Wheel Scanners 231
Appendix F Calibration of Type2 Scanners 233
F.1 Bearing Scanners 233
F.2 Wheel Scanners 236
Appendix G Calibration of Type3 Scanners 239

G.1 Bearing Scanners 239
G.2 Wheel Scanners 244
Appendix H Lens Cleaning of Type3 Scanners 249
Appendix I Predictive Gate Scanning 251
I.1 Overview 251
I.2 Scanning Process 252
I.3 Reporting the Pyrometer Saturation Alarm 253
Appendix J 2500-402 Spacer Kit Installation 255
Appendix K Scanner Resistor Baseline Acquisition 257
K.1 Bungalow Speaker Announcements 257
K.2 Processing Resistor Baseline Results 258
Appendix L 2500-536 Red Filter Frame - New Design 261
Appendix M Communications Ports 263
Appendix N Calibration of the PD8-Plus Presence Detector 265
Appendix O Track Circuit Frequency Configuration 267
Appendix P 15A Breaker Upgrade in SmartScanNG Chassis (Pre-2012) 269
Appendix Q Scanner Base Drain Hole 271
Index 273

1.0 Introduction

This section summarizes the purpose of this guide, describes the SmartScanNG² system, tells how to comment on this guide, and tells how to order more copies of this guide. It also covers the cautions and disclaimers of which the customer should be aware.

1.1 Purpose of This Guide

The technical staff at Southern Technologies Corporation (STC) created the SmartScanNG² system. This guide describes that system.

The SmartScanNG² system monitors moving trains and reports certain conditions detected on these trains. Parts of the system, like the bearing scanners, are installed on the tracks. Other parts of the system, like the controller module, are installed near the tracks. Most nontrackside components are factory-installed inside a wayside enclosure (aka bungalow). Therefore, the installation of these already installed components isn't covered in this guide.

The SmartScanNG² system is modular and firmware-driven. Hardware and firmware can be changed to meet the unique needs of a given railroad. Thus, some of the components that make up a SmartScanNG² system differ from railroad to railroad.

This guide is for those who purchase, install, maintain, troubleshoot, manage, or use the SmartScanNG² system.

1.2 SmartScanNG²

The SmartScanNG² system is a full-featured detection and reporting system. It monitors moving trains, providing real-time detection of:

- Overheated bearings
- Overheated wheels, when wheel scanners are installed and enabled
- Dragging equipment, when dragging-equipment detectors are installed and enabled
- Shifted loads, when wide-load detectors are installed and enabled
- Oversized loads, when high-load detectors are installed and enabled
- Automatic Equipment Identification (AEI) tags, when AEI hardware and firmware are installed and enabled
- Direction of the train
- Exit speed of the train

The SmartScanNG² system runs well in the harsh environments found along right of ways. It runs under the most adverse weather conditions, functioning over a temperature range of -40°F to +160°F (-40°C to +71°C). It runs in high-vibration situations. It runs unattended, carrying out all tasks without human intervention.

The SmartScanNG² system monitors trains traveling from 7 to 90 mph (11.3 to 145 kph). It monitors trains heading in either direction on the track.

When the SmartScanNG² system detects a defect, it informs the crew of the affected train via a voice transmission over an assigned radio channel. The voice is computer-generated from previously digitized human speech. It tells the crew the milepost of the reporting SmartScanNG² system, a warning that a defect has been detected, and other defect-related information. When no defect is detected, the voice tells the crew that the train was scanned and found free of defects.

There are three types of messages. Real-time messages are announced as the train passes over the site. Post-train messages are announced after the train has left the site, and all the recorded train data has been processed by the SmartScanNG² system. When enabled, there are also arrival messages. Arrival messages are announced as the train enters the site. The content and use of these three message types are railroad-specific.

The results of train scans are also stored for later use. With this stored data, the system can create formatted reports. To get them at the site, you need a computer. With a modem and a computer, you can retrieve them remotely.

1.3 Cautions

Contact with electrically active parts could result in sparks, burns, and electric shock. Because of this, you should avoid all electrical hazards when installing, wiring, operating, and maintaining the SmartScanNG² system. Failure to do so could result in damage to the equipment or serious injury to you.

In operation, batteries generate and release flammable hydrogen gas, which, if ignited by a burning cigarette, naked flame, or spark, may cause a battery explosion with a dispersion of casing fragments and corrosive liquid electrolytes. So, carefully follow the manufacturer's instructions. Keep all sources of gas ignition away from the batteries, and do <u>not</u> allow metallic articles to contact the negative and positive terminals of a battery at the same time.

1.4 Disclaimers

The correct use of this guide, the environmental conditions at the time of installation, the method of the installation itself, and the installation of customer-supplied components are beyond the control of STC. So too, are the correct use and maintenance of all or part of the SmartScan system. Therefore, the installer, user, and maintainer must assume the risk of any injury that might occur during the installation, use, and maintenance of all or part of the SmartScan system. STC assumes no risk, liability, or responsibility for errors and omissions on the part of the installer, user, or maintainer.

1.5 How to Comment on This Guide

We want to hear from you. Tell us what you like or don't like about this guide. Send your comments to:

Southern Technologies Corporation
Technical Publications Department
6145 Preservation Drive
Chattanooga, Tennessee 37416-3638
USA

All comments become the sole property of STC, and none will be returned.

1.6 How to Order More Copies of This Guide

When placing an order for more copies of this guide, refer to the order number shown on the cover of this guide. To request pricing and delivery, call 423-892-3029, fax 423-499-0045, or send an email to email@southern-tech.com. Electronic copies of this guide are also available.

1.7 Standard Warranty

Systems manufactured by Southern Technologies Corporation carry a 14-month warranty from the date of shipment. Warranty is limited to repair or replacement at the sole discretion of STC of any goods found to be defective in either materials or workmanship during the 14-month period following shipment. Warranty does not apply to a product with signs of obvious abuse or a product that has been improperly installed.

STC warrants that goods represented by this warranty statement have been designed and manufactured with all reasonable care and attention to appropriate regulatory documents. STC makes no representation that the goods covered by this warranty are suitable for the application they are used for. The application of the goods is at the sole discretion of the purchaser.

The purchaser is responsible for the shipment of the defective product to STC. STC will pay the return shipping charges.

Products purchased from others but included in STC systems carry the original manufacturer's warranty, typically 12 months. Warranty claims for these products must be made directly to the original equipment manufacturer.

2.0 Defect Detection

This section describes the Exception Alarms (aka defect alarms, aka train alarms) and how they are detected. Also covered are miscellaneous train scanning features.

2.1 System Activation

System activation is the process used to detect train presence and to prepare for train scanning. It is during the scanning process that the system checks for defects.

The SmartScanNG² system is equipped with one of two primary means of train arrival detection, which are the track circuit or advance transducers. In case of a failure in the primary detection method, the gating transducers act as a backup to detect train arrival. Once the system senses a train's presence, it enters scanning mode. In other words, the system has been activated. It then opens the scanner's shutters and disables its heaters. It then waits for further evidence of a train at the site in the form of gating transducer activity.

Once the system is active, it reads pulses from the two rail-mounted gating transducers, which are designated TO1 and TO2. On the rail nearest the wayside enclosure, these transducers are mounted near and to the north or east of the bearing scanners. **TO1** is the gating transducer closest to the bearing scanner. **TO2** is the one farthest from the bearing scanner.

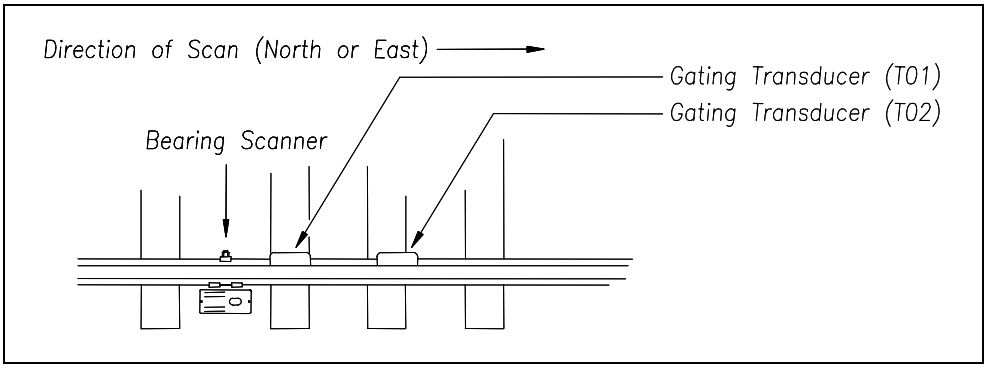

The signals from these gating transducers indicate to the system that passing wheels are in view of the scanners. Furthermore, the speed of the train is determined by using the known distance between TO1 and TO2 versus the time required for a given wheel to pass over them.

Four axles must pass over the gating transducers for the system to consider the event a valid train. This prevents maintenance equipment from generating alarms and causing unwanted voice messages on the road channel.

2.2 System Deactivation

System deactivation is the process used to detect the moment that the train exits the site. This happens in one of two ways, which is dependent upon whether the track circuit or one of the transducers has activated the system.

If the track circuit activates the system, the system waits for the track-circuit signal to be absent for ten seconds before deactivating. Likewise, if a transducer activates the system, the system waits for ten seconds of inactivity from the gating transducers before deactivating.

2.3 Speed Calculation

The train's minimum, maximum, average, and exit speeds in miles per hour are shown on the reports. The system calculates the speed by knowing the distance between the two transducers versus the time that it takes a given wheel to pass over them. Calculated speeds over 99 mph (159 kph) are reported as 99 mph. If a train has fewer than eight axles, its speed is reported as 0 mph.

Trains traveling at less than 7 mph (11.3 kph) are considered "very slow." If a passing train drops below this speed threshold, the detection of Differential alarms, Pyrometer Saturation alarms, and Carside Slope alarms isn't performed. After the passage of these trains, the phrase "train too slow" is appended to the post-train message (when the Announce Slow Train option is enabled), and a diagnostic message is noted on the Train Detail and Exception Detail reports. Also, after the passage of these trains, axle count, exit speed, length of train, and the total number of cars aren't announced. This is true even when the Announce Axles option, Announce Speed option, Announce Train Length option, and Announce Number of Cars option are enabled.

The report fragment below, from the header section of a Train Detail report, shows the location of this message.

```
                    Southern Technologies Corporation
                     Next Generation Detector System
                                TRAIN DETAIL
=====================================================================
                                 .
                                 .
System Alarms
-------------------------------------
VERY Slow Train
                                 .
                                 .
                                 .
```

2.4 Train Direction

Train direction is based on whether TO1 or TO2 generated the first gating transducer pulse.

2.5 Transducer Pulse Processing

As a wheel enters the sensing range of a transducer, the transducer should respond with a positive-going pulse. The polarization of the two wires from the transducer determines if this pulse is positive or negative.

Here is a simple test that you can use to verify the correct polarization of the gating transducers. While watching the TO1 and TO2 LEDs on the display panel, have someone lay a metal wrench on one of the gating transducers. The corresponding LED should briefly light as the wrench touches the transducer. Then lift the wrench up. The LED shouldn't light as the wrench is lifted away. Repeat the test for the other transducer.

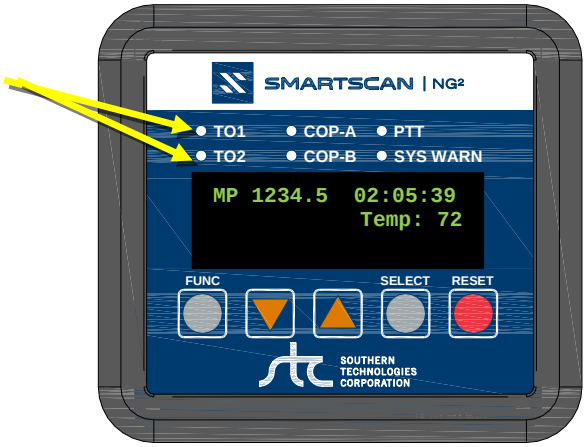

On the Interface board (in the Controller module), the transducer signals undergo RF filtering and amplification with a gain of 30. For validation, the amplified signals are fed into comparators, which create 5 VDC pulses lasting the period of time that the amplified signals remain above 620 millivolts. Processor-A receives these 5 VDC pulses through ports PA0 (TO1) and PA1 (TO2).

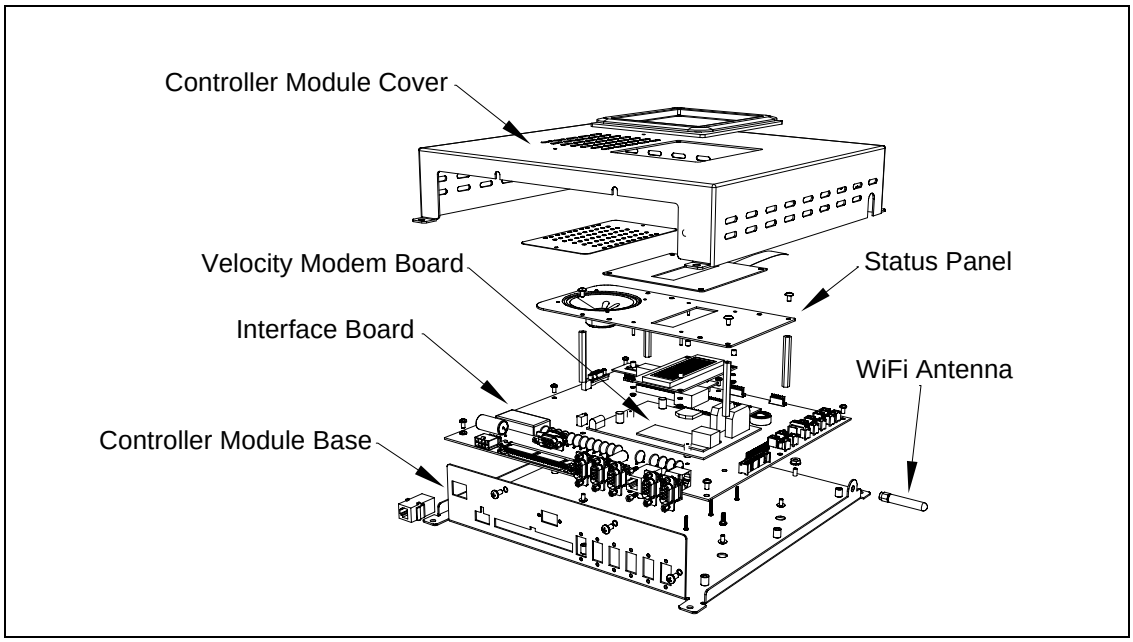

A firmware-controlled feature of the comparator circuit allows adjustment of the threshold voltage based on the speed of the train. Trains traveling less than 20 mph (32 kph) use the 620-millivolt threshold setting for maximum sensitivity. However, faster trains cause the transducers to generate a higher signal voltage, which allows the system to increase the threshold voltage. This improves the signal-to-noise ratio resulting in better signal validation.

Processor-A internally generates interrupts on the positive-going and negative-going edges of each transducer pulse coming from the comparator. The positive edge of each comparator pulse starts a timer. The timer stops with the detection of a negative-going edge. The width of each pulse is a determining factor of signal validity. Three milliseconds or greater is considered to be a valid signal. The firmware rejects any pulse width shorter than 3 milliseconds. Rejected pulses don't increment the transducer counters.

In normal operation, the gating transducers fire in sequence, first one, then the other. With 24-inch (61-centimeter) gating-transducer spacing, a wheel passes over both gating transducers before the next wheel passes over a gating transducer. Therefore, two consecutive pulses on the same gating transducer are not physically possible. However, in the unlikely event that a gating transducer is ever caused to fire by another source, such as electrical interference from a locomotive's traction motor, a spike counter for the gating transducer that misfired will be incremented by one. To increment the axle counter, one pulse from each gating transducer must occur in sequence.

2.6 Axle Scanning

When the train first enters the site, the SmartScanNG² system begins reading the scanners for a heat signal when the wheel is at the center of the first gating transducer. Thereafter, it starts reading the scanners 16 inches (40.6 centimeters) before the center of the first gating transducer. (See ***Appendix I - Predictive Gate Scanning*** for more information about this 16-inch (40.6-centimeter) pre-gate scanning.) The system continues reading until the wheel is at the center of the second gating transducer. This is the period that the axle is in view of the scanner. A negative-going edge of a transducer signal is an indication that the wheel is in the center of that transducer.

The firmware uses Dynamic Scan Rate sampling between the centers of the two transducers (that is, between the gate), which means that heat readings taken every ½ inch (1.27 centimeters) of wheel movement are used to detect alarms, regardless of the speed of the train. As a result, the system takes 48 evenly spaced samples as the wheel rolls through the 24-inch (61-centimeter) detection zone that is established by the distance between the gating transducers.

2.7 Hot Bearing Alarms

The SmartScanNG² system checks for hot bearings during the scanning process. It detects and records every Hotbox alarm that occurs. However, it only announces a maximum of four per train. For example, if a train contains seven Hotbox alarms, the Train Detail report will show all seven, but only the first four will be announced.

There are four types of Hotbox alarms.

- **Absolute**. To trigger an Absolute alarm, a bearing temperature must exceed the limit that was established using the Absolute option. This alarm limit is an offset, in degrees Fahrenheit, above the ambient temperature.
- **Differential**. To trigger a Differential alarm, a bearing temperature must exceed the opposite side bearing temperature of the same axle by a differential amount established using the Differential option.
- **Pyrometer Saturation**. To trigger a Pyrometer Saturation alarm, an interaxle bearing temperature must exceed the limit that was established using the Absolute option. If an Absolute alarm or a Differential alarm has already been triggered for the axle, a Pyrometer Saturation alarm isn't generated.
- **Carside Slope**. To trigger a Carside Slope alarm, a bearing temperature must meet or exceed a calculated alarm level and a minimum heat value. The bearing temperature must also be at least twice the opposite bearing's temperature. If an Absolute alarm or a Differential alarm has already been triggered for the axle, a Carside Slope alarm isn't generated. The minimum heat value is established using the Carside Minimum option.

The system always checks for Absolute alarms. The system also checks for Differential alarms and Pyrometer Saturation alarms. However, their detection stops when the speed of the train drops below 7 mph (11.3 kph). In order for Carside Slope alarms to be processed, they must be enabled using the Carside Slope option on the Equipment Settings menu. The detection of Carside Slope alarms also stops when the speed of the train drops below 7mph (11.3 kph).

2.7.1 Bearing Scan Process

Bearing scanners are mounted in the center of the crib of two ties spaced at least 14 inches (35.6 centimeters) apart. Both bearing scanners are mounted in the crib immediately ahead of the gating transducers (that is, in the crib immediately to the south or west of the gating transducers). They are mounted directly opposite each other, one on each rail of the track. The hole on the top of the scanner covers faces north or east.

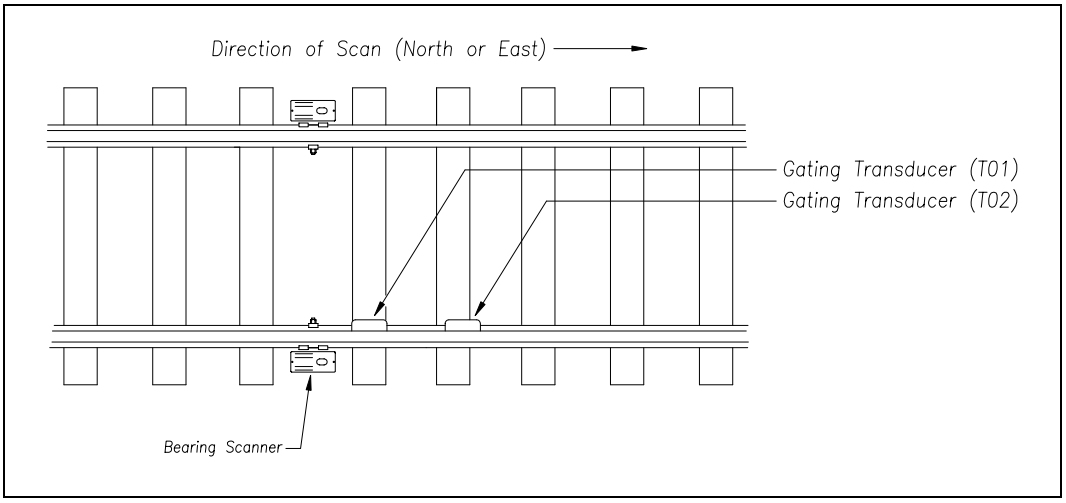

The Type2 bearing scanners are aligned to scan the bottom 3.5 inches (8.9 centimeters) of the bearing housing, about 7.25 inches (18.4 centimeters) from the gauge line.

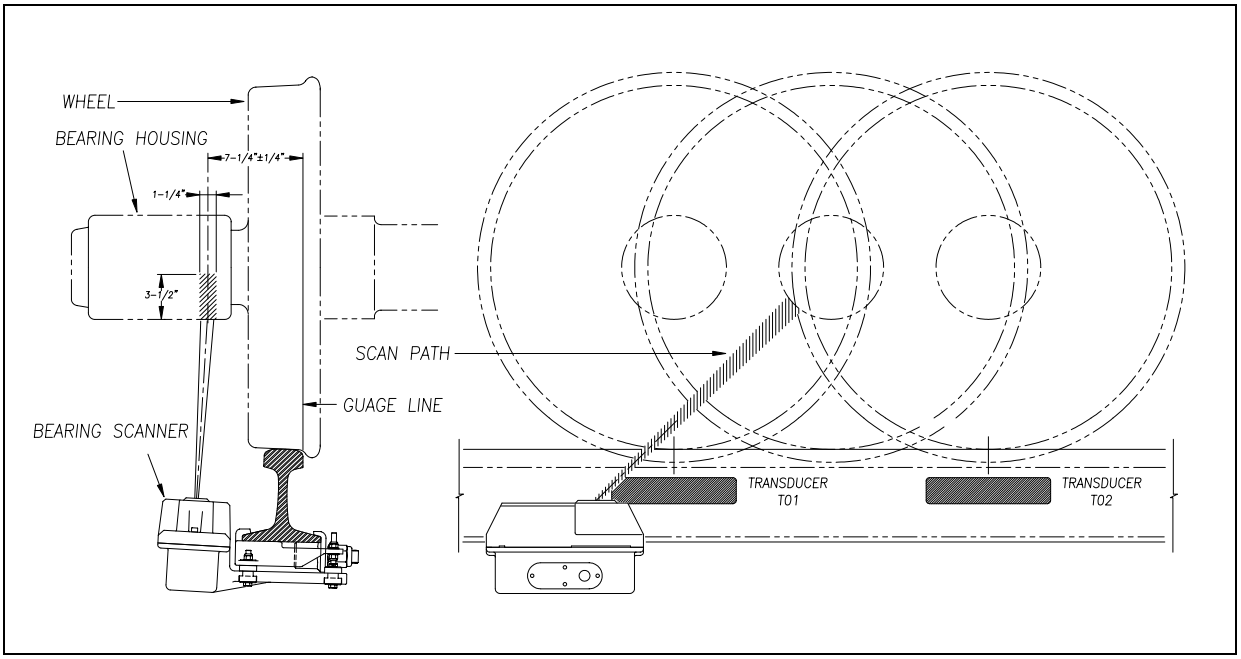

The Type3 bearing scanners are aligned to scan the bottom 3.5 inches (8.9 centimeters) of the bearing housing, about 7.25 inches (18.4 centimeters) from the gauge line.

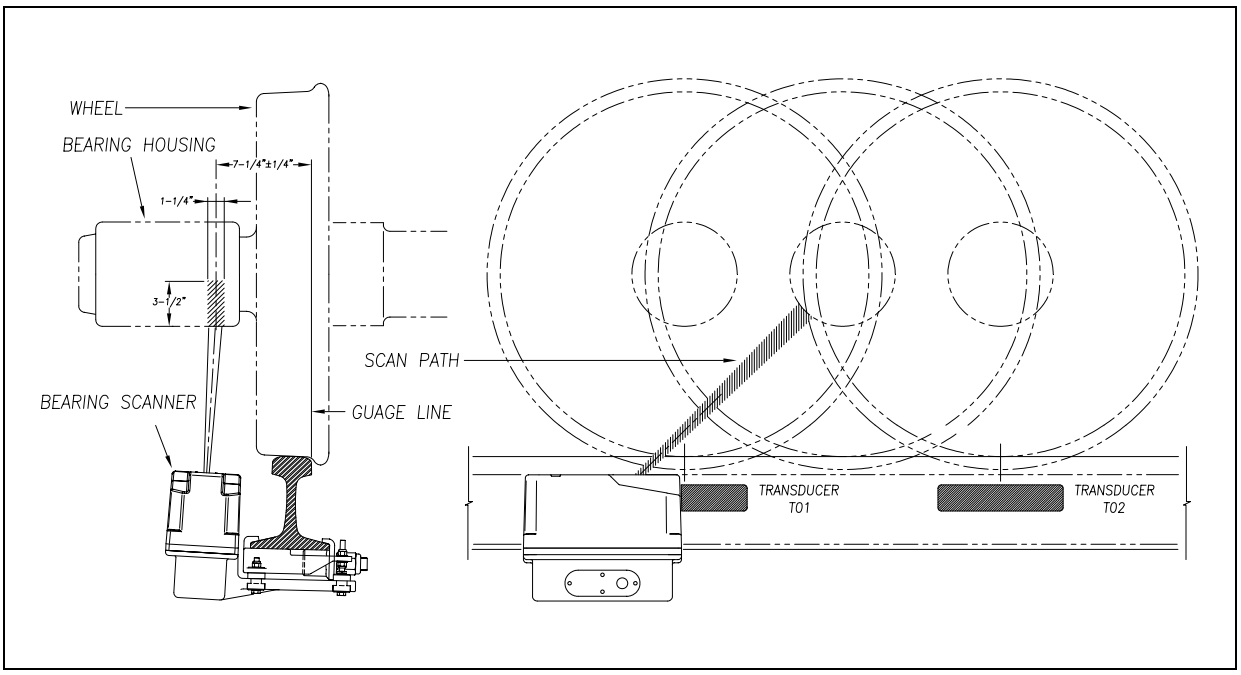

Bearing temperatures are sampled for a short period before the gate opens to support the detection of Pyrometer Saturation alarms, and while the gate is open.

2.7.2 Referencing System

Pyrometers measure rapid changes in infrared energy emitted from objects passing through their field of view. The rail-mounted scanners are aligned to take advantage of this characteristic.

When no axle is present between the gating transducers, the scanner typically sees only the undersides of the cars passing over the site. The undersides of the cars are at or near ambient temperature, thus establishing the reference from which the elevated temperatures of bearings are measured. The pyrometers normalize during this time, producing a zero-level signal.

Occasionally, the scanners are exposed to infrared emissions that are colder than the underside of the cars. Typically, this occurs in the gaps between cars when the scanners may reference on clear sky. This could present an erroneous reference if a bearing was scanned immediately following a sky shot, resulting in an abnormally high reading for the bearing. The pyrometers have internal circuitry to prevent the reference from shifting below the established zero reference.

When a bearing passes through the field of view of the scanner, a rapid change in temperature is presented to the internal lithium tantalite crystal. This causes the signal level from the pyrometer to increase proportionally to the amount of exposed infrared energy. When an axle is between the gating transducers, the pyrometer signal is sampled at every ½ inch (1.27 centimeters) of wheel movement for a total of 48 samples, and the maximum signal level is stored. This signal level measured in volts is converted to a digital value and expressed in degrees Fahrenheit above ambient temperature. This value is the basis for the alarm analysis done by the system.

2.7.3 Pyrometer Linearity

The output of the pyrometers is linear across most of the operating speed range of the system. However, the output of the pyrometers is nonlinear at either end of the operating speed range. To compensate for this nonlinear output, the firmware applies a correction factor to the sampled heat value. The correction factor applied to each bearing sample is based on the speed of the bearing (axle's ON time) as it passed through the gate and on the actual value read by the pyrometer. The correction factor is derived from a table that is keyed by the axle's ON time and heat value. Due to the fast nature of this lookup table, linearity compensation is done in real-time so that detected alarms reflect the heat value after the linearity step has been done.

2.8 Hotwheel Alarms

When used, wheel scanners are mounted in the center of the crib of two ties spaced at least 14 inches (35.6 centimeters) apart. Both wheel scanners are mounted in the crib between the two gating transducers. They are mounted directly opposite each other, one on each rail of the track. The hole on the top of the scanner covers faces the center of the track.

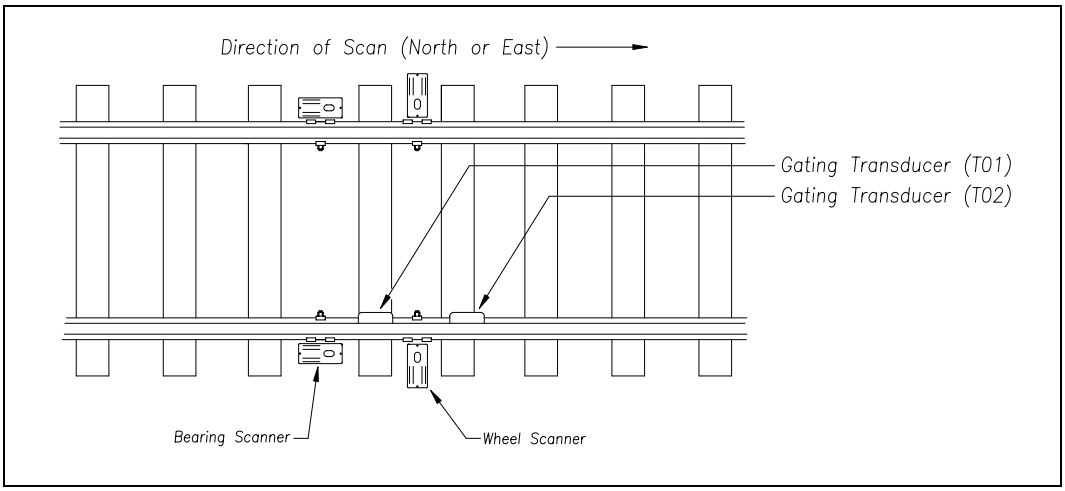

The Type2 wheel scanners are aligned to scan about 4 inches (10 centimeters) above the rail.

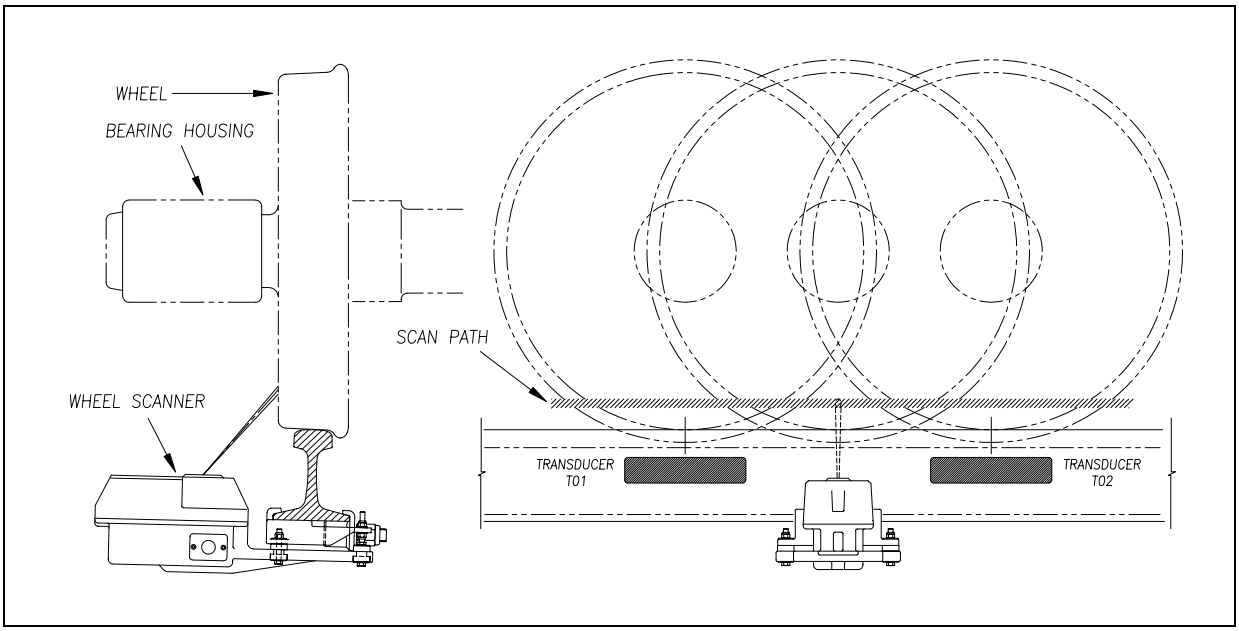

The SmartScanNG² system checks for hotwheels during the scanning process. Scan timing is controlled the same as for the bearing scanners.

Wheel scanning alarms are limited to absolute only. To trigger a Hotwheel alarm, wheel scanners must be properly installed, hotwheel detection must be enabled, and a wheel temperature must exceed the limit that was established using the Hotwheel option on the Alarm Settings menu. This alarm limit is an offset, in degrees Fahrenheit, above the ambient temperature. Hotwheel detection is enabled using the Hotwheel option on the Equipment Settings menu. When enabled, the SmartScanNG² system detects and records every Hotwheel alarm that occurs. However, it only announces a maximum of four per train. For example, if a train contains nine Hotwheel alarms, the Train Detail report will show all nine, but only the first four will be announced.

2.9 Auxiliary Alarms

The SmartScanNG² system can support input from as many as four external alarm devices. Any device that provides an open relay contact upon alarm detection can be supported by the system. Auxiliary alarms supported by the SmartScanNG² system are:

- Dragging Equipment. To trigger a Dragging-Equipment alarm, a dragging-equipment detector must be properly installed, dragging-equipment detection must be enabled, and the SmartScanNG² system must sense an open relay contact from the dragging-equipment detector. Dragging-equipment detection is enabled using the Dragger option on the Equipment Settings menu. When enabled, the SmartScanNG² system detects and records every Dragging-Equipment alarm that occurs on a given train. However, it only announces the first two.
- High Load (oversized loads). To trigger a High-Load alarm, a high-load detector must be properly installed, high-load detection must be enabled, and the SmartScanNG² system must sense an open relay contact from the high-load detector. High-load detection is enabled using the High-Load option on the Equipment Settings menu.
- When a high-load detector is configured for tripwire operation, the SmartScanNG² system only records one High-Load alarm, regardless of the high-load signal status. This is because you can only break a wire once.
- When a high-load detector is configured for light-beam operation, the SmartScanNG² system records every High-Load alarm that occurs. This involves a caveat that the system won't flag High-Load alarms on consecutive axles. At least one unalarmed axle must separate the alarmed axles. Regardless of the number of detected High-Load alarms, it only announces a maximum of two.
- The mode of operation (light beam or tripwire) isn't relevant when the SmartScanNG² system finds a Stuck High-Load Detector Pretrain alarm. When this occurs, the system flags the pretrain condition as an integrity failure, disables high-load scanning for the remainder of the train, and doesn't assign a high-load condition to any of the axles.

- Wide Load (shifted loads). To trigger a Wide-Load alarm, two wide-load detectors (one on each side of the track) must be properly installed, wide-load detection must be enabled, and the SmartScanNG² system must sense an open relay contact from either of the wide-load detectors. Wide-load detection is enabled using the Wide-Load option on the Equipment Settings menu.
- When a wide-load detector is configured for tripwire operation, the SmartScanNG² system only records one Wide-Load alarm, regardless of the wide-load signal status. This is because you can only break a wire once.
- When a wide-load detector is configured for light-beam operation, the SmartScanNG² system records every Wide-Load alarm that occurs. This involves a caveat that the system won't flag Wide-Load alarms on consecutive axles. At least one unalarmed axle must separate the alarmed axles. Regardless of the number of detected Wide-Load alarms, it only announces a maximum of two.
- The mode of operation (light beam or tripwire) isn't relevant when the SmartScanNG² system finds a Stuck Wide-Load Detector Pretrain alarm. When this occurs, the system flags the pretrain condition as an integrity failure, disables wide-load scanning for the remainder of the train, and doesn't assign a wide-load condition to any of the axles.
- Both high-load detectors and wide-load detectors must be either trip-wire detectors or light-beam detectors. The selection of tripwire or light beam is made using the Clearance Type option on the Equipment Settings menu.

2.10 SmartScanNG² Auxiliary Output (Aux Out)

If a real-time alarm is detected, the detector will change the states of the “NORMALLY CLOSED” and “NORMALLY OPEN” contacts on the AUX OUT connector on the bottom of the SmartScan NG² chassis. The state of these contacts will remain changed for three minutes after train departure or until the arrival of another train is detected. This output can be used to activate devices from various customer-specified applications.

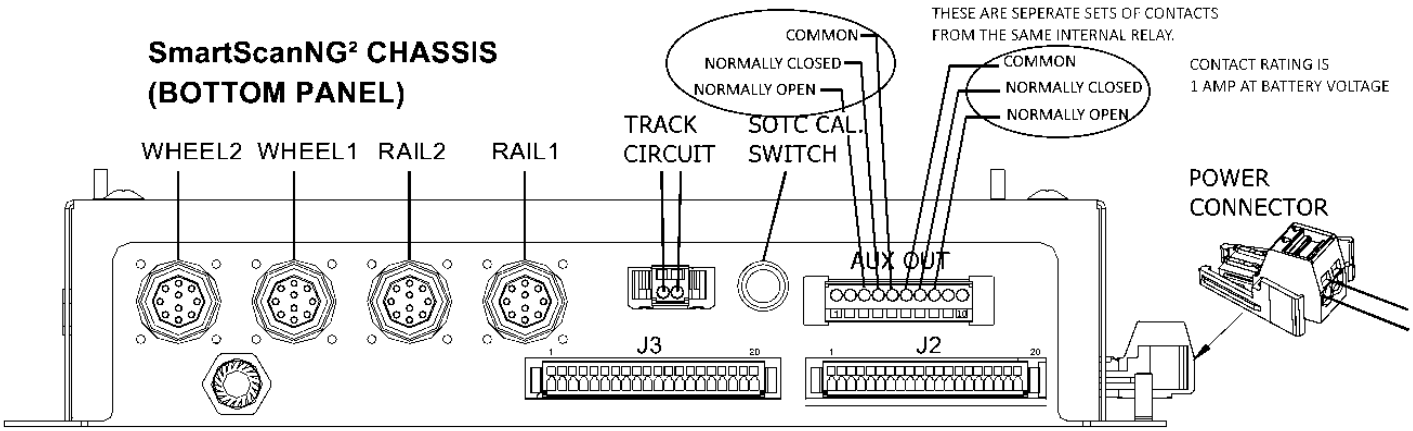

3.0 Display Panel

Located on the front of the SmartScanNG² Controller Module is the Display Panel. Its status indicators and display module provide a snapshot of the overall system health. As a convenience, the Display Panel also provides a user interface to execute some frequently used system functions (i.e. Auto Cal, Radio Test, etc.).

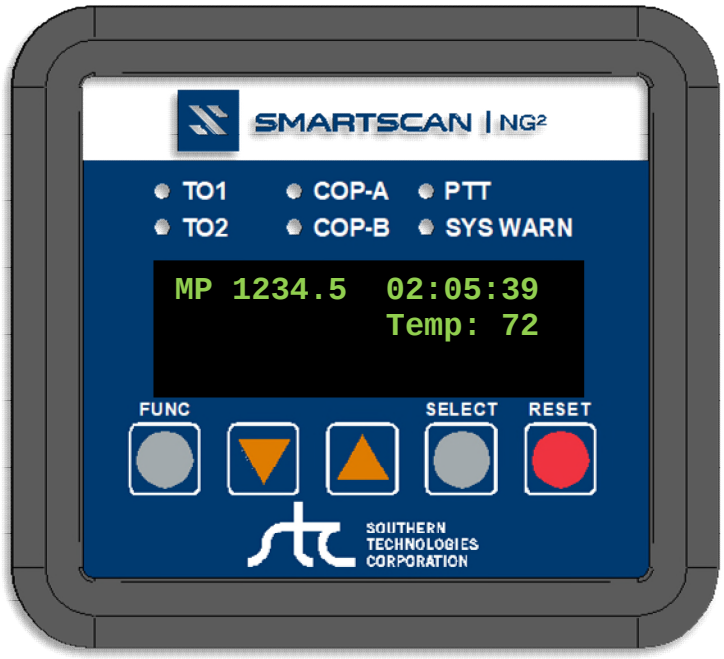

SmartScanNG² Display Panel

3.1 LED Indicators

There are six LED status indicators located above the OLED display.

LED	Meaning when Lit
TO1	Indicates wheel sensor TO1 is active.
TO2	Indicates wheel sensor TO2 is active.
COP-A	Indicates the status of Processor-A. If the CPU is running its program correctly, the LED blinks on and off. If the program isn't operating as expected, the LED is lit solid or isn't lit at all.
COP-B	Indicates the status of Processor-B. If the CPU is running its program correctly, the LED blinks on and off. If the program isn't operating as expected, the LED is lit solid or isn't lit at all.
PTT	Indicates the radio PTT is active.
SYS WARN	Indicates that a system warning has been detected.

3.2 Keypad & Display

The display assembly includes a 4-line, 20-character OLED display and a five-key membrane switch panel. If unused for five minutes, the display will time out to conserve power. Press any key to turn the display back on.

Keypad Switch	**Function**
FUNC	The function key toggles from the home screen to the Main Menu. It also serves as a "Back" key in the system submenus to return to the previous menu level.
▼ (Arrow Down)	Scroll down the menu options.
▲ (Arrow Up)	Scroll up the menu options.
SELECT	Selects the highlighted menu option.
RESET	Initiates system reset.

The home screen displays the milepost, time, and temperature.

```
MP 1234.5  02:05:39
           Temp: 72
```

If a system warning has been detected, the display will indicate "Check Sys. Health Menu" at the bottom of the screen.

Menu Navigation:

- Press the **FUNC** key to toggle from the home screen to the Main Menu or to back out of the submenus.
- Use the ▲UP and ▼DOWN keys to move the ► pointer next to the desired menu option.
- Press the **SELECT** key to choose the menu option. The "↓" symbol on the display screen indicates that there are more options available if you scroll down. Likewise, the "↑" symbol indicates more options are available if you scroll up.

```
Main Menu
 ►Sys. Health Menu
  Reset Sys. Health
↓ Radio Test
```

3.3 System Health Menu

The System Health Menu provides a snapshot of the system's general health. Each system health check displays a status of "GOOD" or "BAD" based on trending information derived from system alarms, integrity failures, and other monitored data. If a system warning has been flagged, the **SYS WARN** LED will be lit, and the "Check System Health" message will be displayed on the bottom text line of the home screen.

1. From the Main Menu, place the ►pointer next to **Sys. Health Menu.**

```
Main Menu
 ►Sys. Health Menu
  Reset Sys. Health
↓ Radio Test
```

2. Press the **Select** key. The status of the following system health checks is displayed:

   NumTrains, LowMiscount, HighMiscount, AvgTemp0, AvgTemp1, AvgTemp2, AvgTemp3, ColdRail0, ColdRail1, ColdRail2, ColdRail3, Avg Miscount, and Batt. prcnt.

```
Sys. Health Menu
 ►NumTrains     Good
  LowMiscount   Good
↓ HighMiscount  Good
```

   If any of these system health checks indicate a "Bad" status, select that item to display more detailed information.

3. To reset system health, navigate to the Main Menu and place the ► pointer next to the **Reset Sys. Health.**

```
Main Menu
  Sys. Health Menu
 ►Reset Sys. Health
↓ Radio Test
```

4. Press the **Select** key. When prompted, select **Yes** to reset system warnings and zero all health check counts.

```
Are You Sure?
 ►Yes
  No
```

3.4 System Functions

Several system functions can be performed from the display panel. Available options are:

- System Health Menu
- Reset System Health
- Radio Test
- Auto Cal
- Network Menu
- Radio Menu
- Volume Menu

3.4.1 Radio Test

To perform a radio test, go to the Main Menu and select **Radio Test**

```
Main Menu
↑►Radio Test
  Auto Cal
↓ Network Menu
```

The Radio Test option is used to broadcast a short message through the speaker and through the radio. Using this option lets you verify that the speaker and radio are working properly.

At single-track sites, the text of the message is "Testing, Iowa Interstate, milepost, (*milepost number*), testing, one, two, three, four, five, four, three, two, one, testing." At double-track sites, the text of the message is "Testing, Iowa Interstate, milepost, (*milepost number*), track (*track designation*), testing, one, two, three, four, five, four, three, two, one, testing."

If the system isn't currently making any other voice announcements, it begins the Radio Test announcement. After the announcement finishes, the System Functions menu reappears.

If the system is currently making a voice announcement, the firmware begins the Radio Test after all previously-queued announcements finish.

While listening to the message, look at the PTT LED on the display panel.

The **PTT LED** should be lit. If this LED isn't lit, the system's ability to send a message to the radio might be inhibited by the Radio Inhibit option on the System Functions menu. If the radio is inhibited, the results of this check are invalid.

3.4.2 Auto-Calibration

The SmartScanNG² system self-calibrates its pyrometer interface circuitry. You need only put a preheated calibrated heat source on a scanner and place the system in autocalibration mode. The system then scans all pyrometer inputs until the signal from the calibrated heat source is located. The necessary adjustments to the related interface circuitry are automatically made while the system monitors its own progress by analyzing changes in the heat signals.

From the Main Menu, select **Auto Cal.** This prompt appears.

```
Searching for heat…
Searching, 150 sec.
```

Once the procedure has been completed, autocalibration mode is disengaged, and the calibration results are displayed.

For a detailed description of the auto-calibration procedures, go to **Appendix F Calibration of Type2 Scanners,** or **Appendix G Calibration of Type3 Scanners**.

3.4.3 Network Menu

From the Main Menu, select **Network Menu** option to view/change network settings.

Available options are:

DHCP server, Wifi (on/off), IP Address, DHCP (on/off), TELNET port, HTTP port, and HTTPS port

3.4.4 Radio Menu

From the Main Menu, select Radio Menu to view the radio screen. This screen will display certain radio status information such as:

- "PTT Disabled" if Radio Inhibit is active
- "Holdoff Active" if holdoff is enabled
- "CD active" when the radio has detected an active carrier signal

Press the SELECT key to initiate Radio Test.

3.4.5 Volume Menu

From the Main Menu, select **Volume Menu** to view/change speaker volume.

```
Vol: 5 [|||||     ]
Up/Down = change
Select = Radio test
Func = Back
```

There are ten volume settings (0 – 9), with level 9 being the maximum volume. Press the ▲UP key to increase the volume level. Press the ▼DOWN key to decrease the volume level.

Pressing the **SELECT** key while in Volume Menu will initiate a radio test.

The Radio Test is used to broadcast a short message through the speaker and through the radio. Using this option lets you verify that the speaker volume is at a sufficient level. At single-track sites, the text of the message is "Testing, Iowa Interstate, milepost, (milepost number), testing, one, two, three, four, five, four, three, two, one, testing." At double-track sites, the text of the message is "Testing, Iowa Interstate, milepost, (milepost number), track (track designation), testing, one, two, three, four, five, four, three, two, one, testing."

Press the **FUNC** key to back out of the menu.

4.0 Serial Interface

The serial interface allows **on-site** and **off-site** communication with the system. This interface is the only way to view reports and modify system parameters.

Most sites are equipped with either Ethernet or telephone service that provides remote communications capabilities. If not, you cannot communicate with the system **off-site**.

To use the interface locally, you need the following:

- A computer
- Communications software, which is installed on the computer
- A cable from the computer to a communications port on the Controller module

For remote access via telephone:

- A computer with communications software
- A modem, which is connected to the computer
- A nonswitched analog telephone line, which is connected to the computer's modem
- Another modem, which is connected to COM3 on the Interface board (internally) or COM3 on the Controller module (externally)
- Another nonswitched analog telephone line, which is connected to the SmartScanNG²'s modem

For remote access via network:

- A computer with communications software and internet connectivity
- An Ethernet connection at the SmartScanNG² controller

If your site uses an external modem, it must be attached to COM3 on the Controller module. But before attaching it, you must first disconnect P14 on the Interface board from the internal modem. You must next route COM3 on the Interface board to the external connector COM3 on the SmartScanNG² chassis (that is, the Controller module).

This section describes the serial interface for SmartScanNG² systems. It covers how to enter or change the system parameters. It is necessary to go through a complete setup the first time a SmartScanNG² system is installed at a new site. (If this is a double-track site, you also need to do this for the other SmartScanNG² system.) After that, the processor (in the Controller module) retains the setup information in flash memory. During a power outage, no setup information is lost.

4.1 Main Menu

1 If **on-site**, plug your computer into COM1**.**

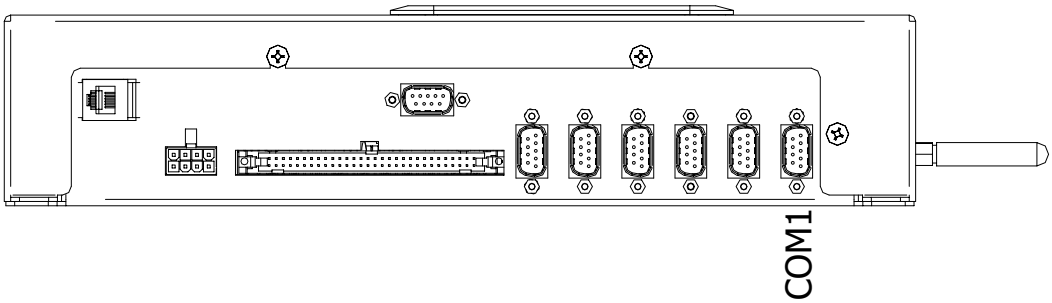

2 Turn on your computer.

3 Be sure that your computer has installed communications software, that it is set to use full-duplex, and that the baud rate is set to 19,200.

Use your communications software to open a LOG file and capture the whole session to the file. When your session is complete, you may then view what you have done with an editor, print it with a printer, or store it for later retrieval.

4 On your computer, open a LOG file.

To display the **Main Menu**:

5 Press **[Esc].**

If the system has been set up with security passwords, this prompt appears.

```
Enter password:
```

6 Type the appropriate password to display Main Menu.

System login with an administrative password allows all access to system menus.

System login with a user password allows access to report menus and system functions menu but restricts access to the setup menu and security menu.

7 The Main Menu

```
SmartSCAN NG2, MP/KP:1234.5, Track:Single
12/21/2022 23:42:40, 11.7V, 74°F
Main Menu - Comm
----------------------------------------
[A] - Train Summary
[B] - Train Detail
[C] - Exception Summary
[D] - Exception Detail
[E] - System Status Report
[F] - Last Train
[G] - Train DSRs
[H] - AEI Diagnostic
[I] - Setup
[J] - Event Log
[K] - System Functions Menu
[L] - Replay Train
[M] - Security Menu
[X] – Exit
```

By selecting an option at the above prompt, you can:

- Produce a report.
- Replay an EOT announcement.
- Access the Setup menu. It is from the Setup menu that you can set system parameters.
- Access the System Functions menu.

If a train is at the site when the Main menu is generated, "*** Train Is Present ***" is displayed just above the menu header for the Main menu and for every other menu.

8 When done, close the LOG file.

9 To exit the serial interface and return the system to normal operation, type **X**.

4.2 Setup Menu

To display the Setup menu:

1 Be sure that the Main menu is displayed.

The Main menu looks like this.

```
SmartSCAN NG2, MP/KP:1234.5, Track:Single
12/21/2022 23:42:40, 11.7V, 74°F
Main Menu - Comm
----------------------------------------
[A] - Train Summary
[B] - Train Detail
[C] - Exception Summary
[D] - Exception Detail
[E] - System Status Report
[F] - Last Train
[G] - Train DSRs
[H] - AEI Diagnostic
[I] - Setup
[J] - Event Log
[K] - System Functions Menu
[L] - Replay Train
[M] - Security Menu
[X] – Exit
```

2 Select the **Setup** to view menu options.

If the Setup menu is password protected, this prompt appears.

```
You are not logged in with admin privileges
Enter password:
```

You are given three chances to type the correct password. When you don't type the correct password in three tries, the system returns to the Main menu.

If the password is less than 20 characters long, press **[Enter]** after typing the last character. If the password is the full 20 characters in length, pressing **[Enter]** isn't necessary.

The entry of the password is **not** case-sensitive. For example, the password "abc#123" can be entered as "ABC#123," "aBc#123," and so forth.

```
SmartSCAN NG2, MP/KP:1234.5, Track:Single
12/21/2022 23:43:36, 11.7V, 74°F
Setup Menu
----------------------------------------
[A] - Date and Time
[B] - MP/KP
[C] - Track Designation ......... Single
[D] - Track Direction ............... N/S
[E] - Alarm Settings
[F] - Equipment Settings
[G] - Messages Settings
[H] - AEI Settings
[I] - Load Default Setup Parameters
[J] - COM Port Settings
[K] - Network Settings
[L] - Velocity ................. Enabled
[X] – Exit
```

To access any of the Setup menu options, type the letter that corresponds to the desired menu option.

At any prompt, a timeout mechanism is in place to prevent the system from remaining in that state indefinitely. When a timeout occurs, the serial interface regresses to the previous menu. For example, if a timeout occurs in the Equipment Settings menu, the system reverts to the Setup menu. If this menu times out, the system reverts to the Main menu. If this menu times out, the system disconnects the modem connection and resumes normal operation. At the Main menu, the timeout is set for five minutes. For all other prompts, the system uses several different timeout values.

If a train is at the site when the Setup menu is generated, "*** Train Is Present ***" is displayed just above the menu header for the Setup menu.

3 To return to the Main menu, type **X**.

Changes to the system parameters aren't reflected until after you have exited the Setup menu.

4.2.1 Date and Time

To set or change the date, the time, or both:

1 Be sure that the Setup menu is displayed.

The Setup menu looks like this.

```
SmartSCAN NG2, MP/KP:1234.5, Track:North
12/21/2022 13:08:34, 11.7V, 72°F
Setup Menu
----------------------------------------
[A] - Date and Time
[B] - MP/KP
[C] - Track Designation .......... North
[D] - Track Direction ............... N/S
                  •
                  •
                  •
```

2 Select the Date and Time submenu

A prompt like this appears.

```
Current Date: 02/10/2022
Enter New Date (mm/dd/yyyy):
```

Dates are in **mm/dd/yyyy** format, where **mm** is month, **dd** is day, and **yyyy** is year. Type the current date. You must include slashes. For days and months from 1 through 9, you must type leading zeros. Thus, for 8 July 2022, type **07/08/2022**.

If you want to keep the displayed date, press **[Enter]**. If you don't, type a new date.

3 Type a new date <u>or</u> press **[Enter]**.

A prompt like this appears.

```
Current time is: 22:47:34
Enter new time:
```

Time is in 24-hour **hh:mm:ss** format, where 8 a.m. is 08:00:00, noon is 12:00:00, 8 p.m. is 20:00:00, and midnight is 00:00:00. Thus, for 17 seconds past 3:42 p.m., type **15:42:17**. You must include colons. For hours, minutes, and seconds from 0 through 9, type leading zeros.

If you want to keep the displayed time, press **[Enter]**. If you don't, type a new time.

4 Type a new time or press **[Enter]**.

A prompt like this appears.

```
Current Time Zone: Eastern
Enter New Time Zone (E-Eastern,C-Central,M-Mountain,P-Pacific):
```

If you want to keep the displayed time zone, press **[Enter]**. If you don't, type the letter that corresponds to the time zone you want.

5 Type the letter that corresponds to the time zone you want, or press **[Enter]**.

A prompt like this appears, stating whether the daylight-saving-time adjustment is currently disabled or enabled. Daylight-saving time is the period during which clocks are set one hour ahead of local standard time.

```
Daylight Savings Time Enabled OK (Y/N)?
```

If disabled, all times throughout the year are in standard time. If enabled, all times between the second Sunday in March and the first Sunday in November are in daylight-saving time. All other times are in standard time. Any change takes effect immediately. Later, if enabled, at 2:00 a.m. on the second Sunday in March, the system will adjust the system's clock forward an hour to 3:00 a.m., and at 2:00 a.m. on the first Sunday in November, the system will adjust the system's clock backward to 1:00 a.m.

At this point, you can type **Y** (yes), type **N** (no), or press **[Enter]**. Pressing **[Enter]** has the same effect as typing **Y**. Typing **N** doesn't change the displayed time.

6 If you want to modify the adjustment, type **N**.

Typing the letter **N** toggles between disabled or enabled. A message like this appears, stating whether the daylight-saving-time adjustment is now disabled or enabled.

```
Daylight Savings Time Disabled OK (Y/N)?
```

7 If you don't want to modify the daylight-saving-time adjustment, type **Y**.

The Setup menu reappears. Information like this appears on line two of the Setup menu, where EDT is the abbreviation for Eastern Daylight Time. If it were EST instead, it would be Eastern Standard Time.

```
09/30/2022 22:47 EDT
```

4.2.2 Milepost/Kilometer Post (MP/KP)

To set or change the milepost/kilometer post (MP/KP) setting:

1 Be sure that the Setup menu is displayed.

The Setup menu looks like this.

```
SmartSCAN NG2, MP/KP:1234.5, Track:North
12/21/2022 13:08:34, 11.7V, 72°F
Setup Menu
----------------------------------------
[A] - Date and Time
[B] - MP/KP
[C] - Track Designation .......... North
[D] - Track Direction ............... N/S
                  •
                  •
                  •
```

2 Select the MP/KP submenu.

A prompt like this appears.

```
Enter the milepost in the form ####.# (use leading zeros):
```

MP/KP is in **nnnn.n** format. If the desired MP/KP has less than five digits, type leading zeros. If the desired MP/KP is an integer, type a trailing zero. Thus, for MP/KP 30, type **0030.0**.

3 To <u>keep</u> the displayed MP/KP:

a Press **[Enter]**.

The Setup menu reappears.

b Skip the remaining steps.

4 To <u>change</u> the displayed MP/KP, type the new five-digit MP/KP, including the decimal point.

The Setup menu reappears.

4.2.3 Track Designation

To change the **Track Designation**:

1 Be sure that the Setup menu is displayed.

The Setup Menu looks like this.

```
                    .
                    .
                    .
  [C] - Track Designation .......... North
  [D] - Track Direction ............. N/S
  [E] - Alarm Settings
  [F] - Equipment Settings
                    .
                    .
                    .
```

2 Select the **Track Designation** menu.

A menu and prompt like this appear. To access any of the menu options, type the letter that corresponds to the desired setting.

```
Select a track designation:
[A] - Single
[B] - North
[C] - South
[D] - East
[E] - West
[F] - Middle
[G] - Main 1
[H] - Main 2
[I] - Main 3
```

3 Select the desired designation from the menu options.

4.2.4 Track Direction

To change the **Track Direction**:

1 Be sure that the Setup menu is displayed.

The Setup Menu looks like this.

```
                    .
                    .
                    .
  [D] - Track Direction ............. N/S
  [E] - Alarm Settings
  [F] - Equipment Settings
  [G] - Messages Settings
  [H] - AEI Settings
                    .
                    .
                    .
```

2 Select the **Track Direction** menu.

A menu and prompt like this appear. To select any of the menu options, type the letter that corresponds to the desired setting.

```
Select Track Direction:
[1] - N/S
[2] - E/W
```

3 Select the desired direction from the menu options.

4.2.5 Alarm Settings

To set or change one or more of the alarm settings (aka alarm limits):

1 Be sure that the Setup menu is displayed.

The Setup menu looks like this.

```
SmartSCAN NG2, MP/KP:1234.5, Track:North
02/17/2022 10:53:47, 14.2V, 69°F
Setup Menu
----------------------------------------
[A] - Date and Time
[B] - MP/KP
[C] - Track Designation .......... North
[D] - Track Direction ............. N/S
[E] - Alarm Settings
                  •
                  •
                  •
```

2 Select the Alarm Settings menu

A menu and prompt like this appear.

```
Alarm Settings
----------------------------------------
[A] - Absolute ..................... 200
[B] - Warm ......................... 170
[C] - Differential ................. 115
[D] - Hot Wheel .................... 702
[E] - Cold Rails ..................... 2
[F] - Cold Rail Temp ................ 10
[G] - Cold Res Counter ............... 3
[H] - Differential Enabled ......... Yes
[I] - Advanced
[X] – Exit
```

This menu option allows you to change the various alarm limits that affect system operations. The current setting for each limit is displayed. To change one of the alarm limit settings, start by typing the letter corresponding to the desired option.

3 To leave the Alarm Settings menu and return to the Setup menu:

a Press **[Esc]** or type **X**.

The Setup menu reappears.

b Skip the remaining steps.

4 To change the displayed **absolute-alarm limit**:

The number after the word Absolute (on the Alarm Settings menu) is an offset in degrees Fahrenheit above ambient temperature. When a bearing temperature exceeds this value, the system generates an Absolute alarm.

```
Alarm Settings
----------------------------------------
[A] - Absolute ...................... 200
[B] - Warm .......................... 170
[C] - Differential ................. 115
                  .
                  .
                  .
```

a Select **Absolute** from the Alarm Settings menu.

This prompt appears.

```
Absolute alarm setting (default = 200)
Enter a value from 1 to 300:
```

If the new limit has less than three digits, type leading zeros to make it three digits long or press **[Enter]** after typing one or two digits.

b To not change the limit, press **[Esc]** and return to the Alarm Settings Menu.

c Type the new limit.

5 To change the displayed **warm-alarm limit**:

The number after the word Warm (on the Alarm Settings menu) is an offset in degrees Fahrenheit above ambient temperature. The Warm Bearing alarm is intended to flag bearings that exceed a specified threshold but are not hot enough to exceed the Absolute alarm threshold.

```
Alarm Settings
----------------------------------------
[A] - Absolute ...................... 200
[B] - Warm .......................... 170
[C] - Differential ................. 115
                  .
                  .
                  .
```

a Select **Warm** from the Alarm Settings menu.

This prompt appears.

```
Warm alarm setting (default = 170)
Enter a value from 1 to 300: 170
```

If the new limit has less than three digits, type leading zeros to make it three digits long or press **[Enter]** after typing one or two digits.

b To not change the limit, press **[Esc]** and return to the Alarm Settings Menu.

c Type the new limit.

6 To change the displayed **differential-alarm limit**:

The number after the word Differential (on the Alarm Settings menu) is an offset in degrees Fahrenheit between rail1 and rail2. A bearing temperature is compared to the bearing temperature on the opposite end of the same axle. When the difference in temperatures exceeds the value on the screen, the system generates a Differential alarm. Checking for Differential alarms stops when the speed of the train drops below 7 mph (11.3 kph).

```
Alarm Settings
----------------------------------------
[A] - Absolute ..................... 200
[B] - Warm ......................... 170
[C] - Differential ................. 115
                    •
                    •
                    •
```

a Select **Differential** from the Alarm Settings menu.

This prompt appears.

```
Differential alarm setting (default = 115)
Enter a value from 1 to 300:
```

If the new limit has less than three digits, type leading zeros to make it three digits long or press **[Enter]** after typing one or two digits.

b To not change the limit, press **[Esc]** and return to the Alarm Settings menu.

c Type the new limit.

7 To change the displayed **hotwheel-alarm limit**:

The number after the words Hot Wheel (on the Alarm Settings menu) is an offset in degrees Fahrenheit above ambient temperature. When a wheel temperature exceeds this value, the system generates a Hotwheel alarm. However, when the Hotwheel option on the Equipment Settings menu is disabled, Hotwheel alarms aren't generated.

```
                    .
                    .
                    .
[D] - Hot Wheel ..................... 702
[E] - Cold Rails ..................... 2
[F] - Cold Rail Temp ................ 10
                    .
                    .
                    .
```

a Select **Hot Wheel** from the Alarm Settings menu.

This prompt appears.

```
Hot Wheel alarm setting (default = 702)
Enter a value from 1 to 900:
```

If the new limit has less than three digits, type leading zeros to make it three digits long or press **[Enter]** after typing one or two digits.

b To not change the limit, press **[Esc]** and return to the Alarm Settings menu.

c Type the new limit.

8 To change the displayed **number of allowed consecutive cold rail events**:

The number after the words Cold Rails (on the Alarm Settings menu) is the maximum number (per railside) of consecutive trains having:

- Cold Resistor alarms needed to generate a Successive Cold Resistors Exceeded alarm.
- Cold Wheel Scanner Resistor alarms needed to generate a Successive Cold Wheel Resistors Exceeded alarm.

The number after the words Cold Rails is also the maximum number of consecutive trains, all having Cold Rail alarms on the same railside, needed to generate a Successive Cold Rails Exceeded alarm.

```
                    .
                    .
                    .
[D] - Hot Wheel ..................... 702
[E] - Cold Rails ..................... 2
[F] - Cold Rail Temp ................ 10
                    .
                    .
                    .
```

a Select **Cold Rails** from the Alarm Settings menu.

This prompt appears.

```
Cold Rails alarm setting (default = 2)
Enter a value from 1 to 9:
```

If the new value has less than three digits, type leading zeros to make it three digits long or press **[Enter]** after typing one or two digits.

b To not change the value, press **[Esc]** and return to step **3**.

c Type the new value.

9 To change the displayed **cold rail temperature**:

The number after the words Cold Rail Temp (on the Alarm Settings menu) is an offset, in degrees Fahrenheit, above the ambient temperature. When no bearing on a given rail generates a delta temperature reading greater than or equal to this value, the system generates a Cold Rail alarm for the given rail. There is a different Cold Rail alarm for each rail. That is, there is a Cold North Rail alarm and a Cold South Rail alarm (or, depending on track direction, a Cold East Rail alarm and a Cold West Rail alarm).

```
                    .
                    .
                    .
[D] - Hot Wheel ..................... 702
[E] - Cold Rails ..................... 2
[F] - Cold Rail Temp ................ 10
                    .
                    .
                    .
```

a Select **Cold Rail Temp** from the Alarm Settings menu.

This prompt appears.

```
Cold Rail Temp alarm setting (default = 10)
Enter a value from 1 to 30:
```

If the new value has less than three digits, type leading zeros to make it three digits long or press **[Enter]** after typing one or two digits.

b To not change the value, press **[Esc]** and return to step **3**.

c Type the new value.

10 To change the displayed **cold resistor counter**:

The number after the words Cold Res Counter is the maximum number (per railside) of consecutive trains having Cold Resistor alarms allowed before generating a Successive Cold Resistors Exceeded alarm. Under normal circumstances, cold resistor conditions represent System Alarms, not Integrity Failures. However, if the number of consecutive trains bearing identical Cold Resistor alarms equals or exceeds the Cold Resistor Counter option on the Alarm Settings menu, this condition becomes an Integrity Failure. If the number of consecutive trains bearing identical Cold Resistor alarms equals or exceeds the cold-resistor limit, the System Alarms section of the Train Detail and Exception Detail reports display the message "Successive Cold Resistors Exceeded."

```
                    •
                    •
                    •
[G] - Cold Res Counter ............... 3
[H] - Differential Enabled ......... Yes
[I] - Advanced
[X] – Exit
```

a Select **Cold Res Counter**

This prompt appears.

```
Cold Res Counter alarm setting (default = 3)
Enter a value between 0 and 9:
```

If the new value has less than three digits, type leading zeros to make it three digits long or press **[Enter]** after typing one or two digits.

b To not change the value, press **[Esc]** and return to step **3**.

c Type the new value.

11 To change the displayed **Differential Enabled setting**:

This setting enables or disables Differential alarms which are generated when a bearing temperature exceeds the opposite side bearing temperature of the same axle by a differential amount established using the Differential option on the Alarm Limits submenu.

Select the Differential Enabled setting to toggle between Yes and No.

```
                    •
                    •
                    •
[F] - Cold Res Counter ............... 3
[G] - Differential Enabled .......... Yes
[H] - Advanced
[X] – Exit
```

12 Select Advanced to view more alarm settings.

```
Alarm Settings (Advanced)
----------------------------------------
[A] - Carside Slope ............... 1.31
[B] - Carside Minimum .............. 155
[C] - Res Test: Minimum Rail Avg .... 25
[D] - Res Test: Minimum Wheel Avg ... 28
[E] - Bearing DSR Capture Temp ...... 72
[F] - Wheel DSR Capture Temp ....... 361
[G] - Max Hot Bearings ............. 10
[H] - Max Hot Wheels ............... 32
[I] - Max Dragging Equipment ........ 10
[X] - Exit
```

13 To change the displayed **carside-slope value**:

The number after the words Carside Slope (on the Alarm Settings menu) is the slope value used when doing carside-slope calculation/analysis. ***Section 2.0 - Defect Detection*** describes the Carside Slope alarm process. In order for Carside Slope alarms to be processed, they must be enabled using the Carside Slope option on the Equipment Settings menu. The detection of Carside Slope alarms stops if the speed of the train drops below 7 mph (11.3 kph).

```
Alarm Settings (Advanced)
----------------------------------------
[A] - Carside Slope ............... 1.31
[B] - Carside Minimum .............. 155
[C] - Res Test: Minimum Rail Avg .... 25
                  •
                  •
                  •
```

a Select **Carside Alarm** from the Alarm Settings menu.

This prompt appears.

```
Carside Slope alarm setting (default = 1.31)
Enter a value from 0.01 to 2.55:
```

The slope value is in **n.nn** format. If the new value has less than three digits, type leading zeros, trailing zeros, or both. Thus, for .98, type **0.98**. For 1.2, type **1.20**.

b To not change the value, press **[Esc]** and return to step **3**.

c Type the new value.

14 To change the displayed **carside minimum heat value**:

The number after the words Carside Minimum (on the Alarm Settings menu) is a minimum offset (in degrees Fahrenheit) used when doing carside-slope calculation/analysis. If the Carside Slope option on the Equipment Settings menu is disabled during train passage, no carside-slope calculation/analysis is done, and thus, no Carside Slope alarms are generated. If the Carside Slope option on the Equipment Settings menu is disabled at the time a Train Detail report is requested, no carside-slope calculation is done; thus, no carside-slope alarm-limit lines are generated. ***Section 2.0 - Defect Detection*** describes the Carside Slope alarm process.

```
Alarm Settings (Advanced)
----------------------------------------
[A] - Carside Slope ............... 1.31
[B] - Carside Minimum ............... 90
[C] - Res Test: Minimum Rail Avg .... 25
                  .
                  .
                  .
```

a Select **Carside Minimum** from the Alarm Settings menu.

This prompt appears.

```
Carside Minimum alarm setting (default = 155)
Enter a value from 0 to 300:
```

If the new value has less than three digits, type leading zeros to make it three digits long or press **[Enter]** after typing one or two digits.

b To not change the value, press **[Esc]** and return to step **3**.

c Type the new value.

15 To change other Alarm setting options:

Select the desired setting. After the prompt, enter a new value.

```
                  .
                  .
                  .
[C] - Res Test: Minimum Rail Avg .... 25
[D] - Res Test: Minimum Wheel Avg ... 28
[E] - Bearing DSR Capture Temp ...... 72
[F] - Wheel DSR Capture Temp ....... 361
[G] - Max Hot Bearings .............. 10
[H] - Max Hot Wheels ................ 32
[I] - Max Dragging Equipment ........ 10
[X] – Exit
```

4.2.6 Equipment Settings

To set or change one or more of the equipment parameters:

1 Be sure that the Setup menu is displayed.

The Setup menu looks like this.

```
SmartSCAN NG2, MP/KP:1234.5, Track:North
09/30/2022 10:06:38, 11.8V, 72°F
Setup Menu
----------------------------------------
[A] - Date and Time
[B] - MP/KP
[C] - Track Designation .......... North
[D] - Track Direction ............... N/S
[E] - Alarm Settings
[F] - Equipment Settings
                  .
                  .
                  .
```

2 Select the Equipment Settings menu.

A menu and prompt like this appear.

```
SmartSCAN NG2, MP/KP:1234.5, Track:Single
01/01/2016 12:00:00, 11.8V, 74°F
Equipment Settings
----------------------------------------
[A] - Dragger ....................... Yes
[B] - High Load ...................... No
[C] - Wide Load ...................... No
[D] - Hot Wheel ..................... Yes
[E] - AEI ........................... Yes
[F] - Hot Bearing ................... Yes
[G] - Presence Hardware ............ Yes
[H] - Advance Transducers ........... No
[I] - AC Power Off Monitor ......... Yes
[J] - Select Scanner Types
[K] - Advanced
[X] – Exit
```

The current setting for each menu option is displayed. For example, the screen above shows that Wide-Load alarm detection is inactive (NO). To change one of the settings, press the letter corresponding to the desired option. Except for the Gate Distance option, which requires a value entry, all the options toggle between two or three settings.

3 To leave the Equipment Settings menu and return to the Setup menu:

a Press **[Esc]** <u>or</u> type **X**.

The Setup menu reappears.

b Skip the remaining steps.

4 To <u>change</u> the current **dragger** (aka dragging-equipment) setting:

The Equipment Settings menu shows whether Dragging-Equipment alarm detection is enabled (YES) or disabled (NO). When disabled, Dragging-Equipment alarms won't be announced nor stored. Since they aren't stored, they can't be printed. When enabled, Dragging-Equipment alarms will be announced and stored. Since they are stored, they can be printed. In the presence of a continuous Dragger signal, the system alarms consecutive axles. When the system reaches the fifth consecutive Dragger alarmed axle, it flags the Stuck Dragger condition.

```
Equipment Settings
----------------------------------------
[A] - Dragger ....................... NO
[B] - High Load ..................... NO
[C] - Wide Load ..................... NO
                  •
                  •
                  •
```

a Select **Dragger** from the Equipment Settings menu.

The dragging-equipment setting toggles between active (YES) and inactive (NO). The Dragger option on the Equipment Settings menu changes. The Equipment Settings menu reappears.

If you want Dragging-Equipment alarm detection to occur, be sure that YES appears after the word Dragger on the Equipment Settings menu.

b Return to step **3**.

5 To <u>change</u> the current **high-load** setting:

The Equipment Settings menu shows whether High-Load alarm detection is active (YES) or inactive (NO). To announce High-Load alarms, YES must appear after the words High Load on the Equipment Settings menu, <u>and</u> Separate must appear after the words Clearance Mode on the Equipment Settings menu. To announce High-Wide alarms, YES must appear after the words High Load on the Equipment Settings menu, <u>and</u> Multiplexed must appear after the words Clearance Mode on the Equipment Settings menu.

```
Equipment Settings
----------------------------------------
[A] - Dragger ....................... NO
[B] - High Load ..................... NO
[C] - Wide Load ..................... NO

                  •
                  •
                  •
```

a Select **High Load** from the Equipment Settings menu.

The high-load setting toggles between active (YES) and inactive (NO). The High-Load option on the Equipment Settings menu changes. The Equipment Settings menu reappears.

If you want High-Load alarm detection to occur, be sure that YES appears after the word High-Load on the Equipment Settings menu.

b Return to Equipment Settings.

6 To change the current **wide-load** setting:

The Equipment Settings menu shows whether Wide-Load alarm detection is active (YES) or inactive (NO).

a Select **Wide Load** from the Equipment Settings menu.

The wide-load setting toggles between active (YES) and inactive (NO). The Wide-Load option on the Equipment Settings menu changes. The Equipment Settings menu reappears.

If you want Wide-Load alarm detection to occur, be sure that YES appears after the word Wide-Load on the Equipment Settings menu.

b Return to step **3**.

7 To change the current **hotwheel** setting:

The Equipment Settings menu shows whether Hotwheel alarm detection is enabled (YES) or disabled (NO). When disabled, Hotwheel alarms won't be announced or stored. Since they aren't stored, they can't be printed. When enabled, Hotwheel alarms will be announced and stored. Since they are stored, they can be printed.

a Select **Hot Wheel** from the Equipment Settings menu.

The hotwheel setting toggles between active (YES) and inactive (NO). The Hotwheel option on the Equipment Settings menu changes. The Equipment Settings menu reappears.

b Return to step **3**.

8 To change the current **AEI** setting:

The Equipment Settings menu shows whether the AEI subsystem is enabled (YES) or disabled (NO). When tag readers and attendant antennas and cabling are present, this parameter should be set to YES so that the system knows to configure the readers and to use the AEI data transmitted from them. When there is no installed AEI subsystem attached to the SmartScanNG² system, this parameter should be set to NO.

a Select **AEI** from the Equipment Settings menu.

The AEI setting toggles between enabled (YES) and disabled (NO). The AEI option on the Equipment Settings menu changes. The Equipment Settings menu reappears.

b Return to step **3**.

9 To change the **Hot Bearing** setting:

The Equipment Settings menu shows whether the Hot Bearing alarm detection is enabled (YES) or disabled (NO). When disabled, Hot Bearing alarms won't be announced or stored. Since they aren't stored, they can't be printed. When enabled, Hot Bearing alarms will be announced and stored.

a Select **Hot Bearing** from the Equipment Settings menu.

The hot bearing setting toggles between active (YES) and inactive (NO). The Equipment Settings menu reappears.

b Return to step **3**.

10 To change the **Presence Hardware** setting:

a Select **Presence Hardware** from the Equipment Settings menu.

The Presence Hardware setting toggles between active (Enabled) and inactive (Disabled). The Equipment Settings menu reappears.

b Return to step **3**.

11 To change the **Advance Transducers** setting:

a Select **Advance Transducers** from the Equipment Settings menu.

The Advance Transducers setting toggles between active (Yes) and inactive (No). The Equipment Settings menu reappears.

b Return to step **3**.

12 To change the **AC Power Off Monitor** setting:

a Select **AC Power Off Monitor** from the Equipment Settings menu.

The AC Power Off Monitor setting toggles between active (Yes) and inactive (No). The Equipment Settings menu reappears.

b Return to step **3**.

13 To **Select Scanner Types**:

The Equipment Menu shows the scanner type currently selected for each scanner position.

a Select Scanner Types option from the Equipment Settings menu.

```
Scanner Types (changes require calibration)
----------------------------------------
[A] - North Rail: Type III
[B] - South Rail: Type III
[C] - North Wheel: Type III
[D] - South Wheel: Type III
[X] – Exit
```

Select scanner options to cycle between **Type I**, **Type III,** and **Type II**.

Type X to return to the Equipment Settings menu.

b Return to Equipment Settings.

14 From the Equipment Settings Menu, select Advanced Equipment Settings to access additional settings.

```
SmartSCAN NG2, MP/KP:1234.5, Track:North
09/30/2022 10:08:27, 11.8V, 73°F
Equipment Settings (Advanced)
----------------------------------------
[A] - Carside Slope ................. No
[B] - Clearance Type ........ Light Beam
[C] - Clearance Mode .......... Separate
[D] - Winter Cycle ........... Jan - Jan
[E] - Transducer Gain ........... Normal
[F] - Resistor Test ............ Enabled
[G] - Gate Distance ............ 24.0 in
[H] - Dragger Debounce Time ..... 100 ms
[I] - Pre Train Dragger Dist ...... 6 ft
[J] - Pre Train High/Wide Dist .... 0 ft
[K] - Presence Timeout Period ... 10 sec
[L] - System Voltage ............... 12v
[M] - Sunshot Menu
[N] - Transducer / Scanner Offset Menu
[P] - WILD Detector Co-Located ...... No
[X] - Exit
```

15 To <u>change</u> the current **carside-slope** setting:

The Equipment Settings menu shows whether Carside Slope alarm detection is enabled (YES) or disabled (NO). If disabled (NO) during train passage, no carside-slope calculation/analysis is done; thus, no Carside Slope alarms are generated. If disabled (NO) at the time a Train Detail report is requested, no carside-slope calculation is done, and thus, no carside-slope alarm-limit lines are generated.

a Select **Carside Slope** from the Equipment Settings menu.

The carside-slope setting toggles between active (YES) and inactive (NO). The Carside Slope option on the Equipment Settings menu changes. The Equipment Settings menu reappears.

b Return to step **3**.

16 To <u>change</u> the current **clearance-type** setting:

The Equipment Settings menu shows whether the clearance type is tripwire or light beam. This option is only used for high-load detectors and wide-load detectors. <u>Both</u> high-load detectors and wide-load detectors must be <u>either</u> trip-wire detectors or light-beam detectors.

a Select **Clearance Type** from the Equipment Settings menu.

The clearance-type setting toggles between tripwire and light beam. The Clearance Type option on the Equipment Settings menu changes. The Equipment Settings menu reappears.

b Return to step **3**.

17 To change the current **clearance-mode** setting:

The Equipment Settings menu shows whether the clearance mode is separate or multiplexed. This option is only used for high-load detectors and wide-load detectors. When set to separate, the alarms coming from the high-load detectors are announced as High-Load alarms, and the alarms coming from the wide-load detectors are announced as Wide-Load alarms. When set to multiplexed, the alarms coming from the high-load detectors and wide-load detectors are announced as High-Wide alarms.

a Select **Clearance Mode** from the Equipment Settings menu.

The clearance-mode setting toggles between separate and multiplexed. The Clearance Mode option on the Equipment Settings menu changes. The Equipment Settings menu reappears.

When switching the Clearance Mode parameter from Separate to Multiplexed, the firmware checks the current Announce High Load and Announce Wide Load settings. If they match, no changes occur. If they differ, the firmware changes both to Yes. In this situation, the following warning message appears on the Serial Interface.

```
*****************************************************************************
* When setting Clearance Mode to Multiplexed operation, the Announce High *
* Load and Announce Wide Load options will change to Yes (enabled) if     *
* their current settings do not match.                                     *
*****************************************************************************
```

b Return to step **3**.

18 To change the current **winter-cycle** setting:

The Equipment Settings menu shows whether the winter-cycle feature is enabled (YES) or disabled (NO). To avoid errant heat readings caused by moisture on the pyrometer lenses, the scanners have heaters built into them. The heaters are made active, for varying periods of time, depending on an ambient temperature of 80°F (26.7°C) or less.

The table below lists the heater activation times for both normal and winter-cycle operations, grouped by ambient temperature.

Temperature Range in degrees Fahrenheit		**Out of every ten seconds, the number of seconds the scanner heaters are active**	
Low	**High**	**Winter Cycle Disabled**	**Winter Cycle Enabled**
--	16	4	8
17	35	3	7
36	51	2	2
52	80	1	1
80	--	Off	Off

The normal heater activation times aren't suitable for extremely cold climates, so the winter-cycle feature compensates for this. When this feature is disabled, the heater controls function normally. When enabled, the system increases the normal running time for the scanner heaters. The winter-cycle feature doesn't affect all the temperature ranges that the scanner heaters will activate on. It affects just the ones that are considered extremely cold.

a Select **Winter Cycle** from the Equipment Settings menu.

The winter-cycle setting toggles between enabled (YES) and disabled (NO). The Winter Cycle option on the Equipment Settings menu changes. The Equipment Settings menu reappears.

b Return to step **3**.

19 To change the current **transducer-gain** setting:

The Equipment Settings menu shows whether the transducer-gain setting is normal or high. Regardless of the setting, the SmartScanNG² system starts every train with the transducer input comparator set to high mode. Then, if the train is traveling 20 mph (32 kph) or more and if the transducer gain was set to normal mode, the transducer input comparator switches to normal mode. This means that it is rarely necessary to set this option to high.

When the comparator is in high mode, the comparator converts lower voltage pulses from the transducer into output pulses. This causes the system to be more sensitive to transducer output. When the comparator is in normal mode, the comparator has a better chance of filtering transducer pulses not caused by a wheel.

a Select **Transducer Gain** from the Equipment Settings menu.

The transducer-gain setting toggles between **normal** and **high**. The Transducer Gain option on the Equipment Settings menu changes. The Equipment Settings menu reappears.

b Return to step **3**.

20 To change the current **resistor-test** setting:

The Equipment Settings menu shows whether the resistor-test setting is enabled or disabled.

After a train clears a site, the system does an integrity test (when enabled) to verify that the scanners are operational and that the system can read alarm-level heat. This test consists of reading the temperature of power resistors mounted to the back of the scanner shutters after the shutters close. The recorded temperature of the shutter resistors is compared against expected values, which are calculated using a combination of the amount of time the shutters were open and the system battery voltage.

When the resistor integrity test is enabled, a system algorithm determines the minimum acceptable resistor temperature values for a given train. When disabled, the resistor integrity test is not performed.

The minimum required resistor temperatures for a given train are determined by the train's duration at the site and the resistor temperature baseline profile. This profile was established 20 minutes after the user calibrated the scanners with the autocalibration function. Twenty minutes is the cooling period required to allow the resistors to return to ambient temperature after autocalibration.

```
                    .
                    .
                    .
  [E] - Transducer Gain ........... Normal
  [F] - Resistor Test ............ Enabled
  [G] - Gate Distance ............ 24.0 in
                    .
                    .
                    .
```

a Select **Resistor Test** from the Equipment Settings menu.

The resistor-test setting toggles from enabled to disabled.

b Return to step **3**.

21 To <u>change</u> the current value for **gate distance** (aka gate width):

The Equipment Settings menu shows the number of inches between the centers of the gating transducers.

```
                  .
                  .
                  .
[E] - Transducer Gain ........... Normal
[F] - Resistor Test ............ Enabled
[G] - Gate Distance ............ 24.0 in
                  .
                  .
                  .
```

a Select **Gate Distance** from the Equipment Settings menu.

This prompt appears.

```
Gate Distance equipment setting (default = 0.0)
Enter a value between 0.0 and 48.0:
```

The gate distance is in **nn.n** format. If the new value has less than three digits, type leading zeros, trailing zeros, or both. Thus, for 2, type **020**. The system inserts the decimal point for you. The gate distance (it is usually 24.0) can be recorded in 1/10-inch increments to reflect the actual transducer spacing. Accurate gating-transducer spacing results in accurate speed calculations.

b Type the three-digit number.

The Gate Distance option on the Equipment Settings menu changes. The Equipment Settings menu reappears.

c Return to step **3**.

22 To change the **Dragger Debounce Time**:

a Select **Dragger Debounce Time** from the Equipment Settings menu.

This prompt appears.

```
Dragger Debounce Time equipment setting (default = 200 ms)
Enter a value between 0 and 999:
```

If the new value has less than three digits, type leading zeros to make it three digits long or press [Enter] after typing one or two digits.

b Return to step **3**.

23 To change the Pre Train Dragger Distance:

a Select **Pre Train Dragger Dist** from the Equipment Settings menu.

This prompt appears.

```
Pre Train Dragger Dist equipment setting (default = 200 ft)
Enter a value between 0 and 999:
```

If the new value has less than three digits, type leading zeros to make it three digits long or press [Enter] after typing one or two digits.

b Return to step **3**.

24 To change the **Pre Train High/Wide Dist**:

a Select **Pre Train High/Wide Dist** from the Equipment Settings menu.

This prompt appears.

```
Pre Train High/Wide Dist equipment setting (default = 0 ft)
Enter a value between 0 and 999:
```

If the new value has less than three digits, type leading zeros to make it three digits long or press [Enter] after typing one or two digits.

b Return to step **3**.

25 To change the **Presence Timeout Period** setting:

a Select **Presence Timeout Period** from the Equipment Settings menu.

This prompt appears.

```
Presence Timeout Period equipment setting (default = 10 sec)
Enter a value from 5 to 30:
```

b Return to step **3**.

26 To change the **System Voltage** setting:

a Select **System Voltage** from the Equipment Settings menu.

The System Voltage setting toggles between 12V and 24V. The Equipment Settings menu reappears.

b Return to step **3**.

27 To change the **Sunshot** settings:

a Select **Sunshot m**enu from the Equipment Settings menu.

This prompt appears.

```
Sunshot Menu
-------------------------------------------------------------
[A] - Sunshot Filter ............................ Disabled
[B] - Bearing Scanner Orientation ................ 0 degrees
[C] - Latitude ..................................... 35.0456
[D] - Longitude ................................... -85.3097
[E] - Print Sunshot Season
[X] - Exit
```

b Select the Sunshot Filter option to toggle from Enabled to Disabled.

c Select the Bearing Scanner Orientation option to change compass direction.

This prompt appears.

```
Bearing Scanner Orientation -
The compass direction in degrees that the scanners are facing.
Enter a value from 0 to 359:
```

d Select the Latitude option to change the value.

This prompt appears.

```
Latitude -
The geographic latitude of your site in degrees.
Enter a value from 0.0000 to 90.0000:
```

e Select the Longitude option to change the value.

This prompt appears.

```
Longitude -
The geographic longitude of your site in degrees.
Enter a value from -180.0000 to 180.0000:
```

b Return to step **3**.

28 To <u>change</u> the **Transducer / Scanner Offset Menu** settings:

```
SmartSCAN NG2, MP/KP:1234.5, Track:Single
06/06/2022 14:42:32, 13.9V, 70°F
Transducer / Scanner Offset Menu
----------------------------------------
[A] - Transducer Type ........................ Frauscher
[B] - Rail Size ............................ 136 (67.46)
[C] - East Rail Scanner Offset ......... 22 inches (TO2)
[D] - West Rail Scanner Offset ......... 23 inches (TO2)
[E] - East Wheel Scanner Offset ........ 24 inches (TO1)
[F] - West Wheel Scanner Offset ........ 23 inches (TO1)
[X] – Exit

East Rail Scanner Offset transducer setting (default = 0 inches)
Enter an OFFSET value from 0 to 100 inches:
```

a Select Transducer Type option to change the setting (toggles from Magnetic to Frauscher).

NOTICE!

When using Frauscher transducers, the settings for rail size and scanner offset <u>MUST</u> be entered in order for the system firmware to accurately calculate the “Virtual Gate” of each scanner. As depicted below, The scanner offset is measured from the center of the transducer bracket to the center of the scanner mounting bracket.

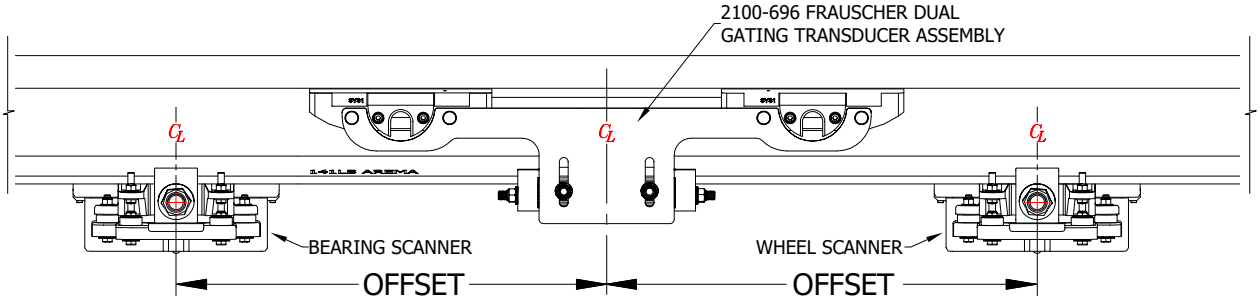

b To change the rail size, select the menu option. A prompt like this appears:

```
Select a Rail Size:
   lbs/yd (kg/m)
[A] - 100 (49.62)
[B] - 115 (57.05)
[C] - 122 (60.52)
[D] - 127 (63.00)
[E] - 132 (65.48)
[F] - 136 (67.46)
[G] - 141 (69.94)
```

Select the appropriate setting for your site.

c To set the scanner offset value for each scanner, select the menu option. A prompt like this appears.

```
East Rail Scanner Offset transducer setting (default = 22 inches)
Enter an OFFSET value from 0 to 100 inches:
```

Enter the appropriate offset setting for each scanner to the nearest inch.

Next, you will be prompted to select scanner orientation (this information is also necessary for “Virtual Gate” calculations). The prompt shows the transducer currently selected.

```
Is the scanner closer to TO1 or TO2?   (Current setting is TO1)
[1] - TO1
[2] - TO2
```

Enter the appropriate selection.

d Return to step **3**.

29 To <u>change</u> the current **WILD Detector Co-Located** setting:

The Equipment Settings menu indicated whether a WILD Detector is co-Located in the equipment bungalow (YES) or (NO).

a Select **WILD Detector Co-Located** from the Equipment Settings menu.

The WILD Detector Co-Located setting toggles between (YES) and (NO). The WILD Detector Co-Located option on the Equipment Settings menu changes. The Equipment Settings menu reappears.

b Return to step **3**.

4.2.7 Messages

To set or change any of the message parameters:

1 Be sure that the Setup menu is displayed.

The Setup menu looks like this.

```
SmartSCAN NG2, MP/KP:1234.5, Track:North
09/30/2022 13:35:40, 11.7V, 73°F
Setup Menu
----------------------------------------
[A] - Date and Time
[B] - MP/KP
[C] - Track Designation .......... North
[D] - Track Direction ............... N/S
[E] - Alarm Settings
[F] - Equipment Settings
[G] - Messages Settings
[H] - AEI Settings
[I] - Load Default Setup Parameters
[J] - COM Port Settings
[K] - Network Settings
[L] - Velocity ................ Disabled
[X] – Exit
```

2 Select the Messages menu

A menu and prompt like this appear. The options on the Messages menu are used to affect the phrases broadcast to a passing train or are used to modify the parameters associated with the rebroadcast function.

```
Messages Settings
----------------------------------------
[A] - Axles ......................... No
[B] - Speed ......................... No
[C] - Temperature .................. Yes
[D] - Length ........................ No
[E] - Slow .......................... No
[F] - Power Off ..................... No
[G] - Repeat No Defects ............. No
[H] - Cars Count .................... No
[I] - Customer Name ................. No
[J] - Arrival Message ............... No
[K] - Lft/Rt Alarm Ref .............. No
[L] - Car ID With Alarm ............. No
[M] - Advanced
[X] – Exit
```

Enabling one or more of these options generates the ancillary messages: A (axle count), B (train speed), C (site ambient temperature), D (train length), E (slow train), F (power off), and H (number of cars). The other options of the Messages menu aren't used to generate ancillary messages.

3 To leave the Messages menu and return to the Setup menu:

a Press **[Esc]** or type **X**.

The Setup menu reappears.

b Skip the remaining steps.

4 To change the **announce-axles** setting:

The Messages menu shows whether the total axle count is to be part of (YES) or not part of (NO) post-train announcements. When the Highrange Transducer Miscounts alarm or Very Slow Train alarm occurs, the system won't announce the train's total axle count, even when this option is enabled.

```
Messages Settings
----------------------------------------
[A] - Axles ........................ YES
[B] - Speed ......................... NO
[C] - Temperature .................. YES
                  .
                  .
                  .
```

a Select **Axles** from the Messages menu.

The announce-axles setting toggles between announce (YES) or not announce (NO). The Announce Axles option on the Messages menu changes. The Messages menu reappears.

b Return to step **3**.

5 To change the **announce-speed** setting:

The Messages menu shows whether the exit speed of the train is to be part of (YES) or not part of (NO) post-train announcements. When the Highrange Transducer Miscounts alarm or Very Slow Train alarm occurs, the system won't announce the train's exit speed, even when this option is enabled

```
Messages Settings
----------------------------------------
[A] - Axles ........................ YES
[B] - Speed ......................... NO
[C] - Temperature .................. YES
                  .
                  .
                  .
```

a Select **Speed** from the Messages menu.

The announce-speed setting toggles between announce (YES) or not announce (NO). The Announce Speed option on the Messages menu changes. The Messages menu reappears.

b Return to step **3**.

6 To change the **announce-temperature** setting:

The Messages menu shows whether the ambient temperature (taken at the site by the shielded temperature probe as the train leaves the site) is to be part of (YES) or not part of (NO) post-train announcements.

```
Messages Settings
----------------------------------------
[A] - Axles ........................ YES
[B] - Speed ......................... NO
[C] - Temperature .................. YES
[D] - Length ....................... NO
                  .
                  .
                  .
```

a Select **Temperature** from the Messages menu.

The announce-temperature setting toggles between announce (YES) or not announce (NO). The Announce Temperature option on the Messages menu changes. The Messages menu reappears.

b Return to step **3**.

7 To change the **announce-train-length** setting:

The Messages menu shows whether the train length is to be part of (YES) or not part of (NO) post-train announcements. When the Highrange Transducer Miscounts alarm or Very Slow Train alarm occurs, the system won't announce the length of the train, even when this option is enabled.

```
Messages Settings
----------------------------------------
[A] - Axles ........................ YES
[B] - Speed ......................... NO
[C] - Temperature .................. YES
[D] - Length ....................... NO
[E] - Slow ......................... YES
                  .
                  .
                  .
```

a Select **Length** from the Messages menu.

The announce-train-length setting toggles between announce (YES) or not announce (NO). The Announce Train Length option on the Messages menu changes. The Messages menu reappears.

b Return to step **3**.

8 To change the **announce-slow-train** setting:

The Messages menu shows whether a message indicating a slow train (one going 7 mph or slower) is to be part of (YES) or not part of (NO) post-train announcements.

a Select **Slow** from the Messages menu.

The announce-slow-train setting toggles between announce (YES) or not announce (NO). The Announce Slow Train option on the Messages menu changes. The Messages menu reappears.

b Return to step **3**.

9 To change the **announce-power-off** setting:

The Messages menu shows whether the power-off message is to be part of (YES) or not part of (NO) post-train announcements. The generation of this message depends on battery voltage, not AC power. It is generated whenever the voltage coming from the battery is less than 12.6 VDC. AC power need never have been off to cause this to happen. However, most times, it does indicate that the AC power has been off, causing the battery to be drained.

a Select **Power Off** from the Messages menu.

The announce-power-off setting toggles between announce (YES) or not announce (NO). The Announce Power Off option on the Messages menu changes. The Messages menu reappears.

b Return to step **3**.

10 To change the **repeat-no-defect-message** setting:

The Messages menu shows whether the no-defect message is to be repeated (YES) or not repeated (NO).

```
                    .
                    .
                    .
     F) Power Off................... YES
     G) Repeat No Defects........... YES
     H) Cars Count................. NO
                    .
                    .
                    .
```

a Select **Repeat No Defects** from the Messages menu.

The repeat-no-defect-message setting toggles between enabled (YES) and disabled (NO). The Repeat No Defects option on the Messages menu changes. The Messages menu reappears.

b Return to step **3**.

11 To change the **announce-number-of-cars** setting:

The Messages menu shows whether the number of cars is to be part of (YES) or not part of (NO) post-train announcements. When the Highrange Transducer Miscounts alarm or Very Slow Train alarm occurs, the system won't announce the number of cars, even when this option is enabled.

a Select **Cars Count** from the Messages menu.

The announce-number-of-cars setting toggles between announce (YES) or not announce (NO). The Announce Number of Cars option on the Messages menu changes. The Messages menu reappears.

b Return to step **3**.

12 To change the **announce-customer-name** setting:

The Messages menu shows whether the customer's railroad name is to be part of (YES) or not part of (NO) of all announcements.

```
                    .
                    .
    H) Cars Count................... NO
    I) Customer Name................ YES
    J) Arrival Message............... YES

                    .
                    .
                    .
```

a Select **Customer Name** from the Messages menu.

The announce-customer-name setting toggles between announce (YES) or not announce (NO). The Announce Customer Name option on the Messages menu changes. The Messages menu reappears.

b Return to step **3**.

13 To change the **announce-arrival-message** setting:

The Messages menu shows whether an arrival message announces (YES) or doesn't announce (NO) train arrival at the site.

a Select **Arrival Message** from the Messages menu.

The announce-arrival-message setting toggles between announce (YES) or not announce (NO). The Announce Train Arrival option on the Messages menu changes. The Messages menu reappears.

b Return to step **3**.

14 To change the **left-right-alarm-reference** setting:

The Messages menu shows whether the alarm reference is announced as left or right (YES) or as north, south, east, or west (NO).

a Select **Lft/Rt Alarm Ref** from the Messages menu.

The left-right-alarm-reference setting toggles between YES and NO. The Announce Left-Right Alarm Reference option on the Messages menu changes. The Messages menu reappears.

b Return to step **3**.

15 To change the **announce-car-identification** setting:

The Messages menu shows whether car-identification information is to be announced (YES) or not announced (NO). When this option is set to YES and an Exception Alarm is found on a car, the car-identification information is included in the post-train announcement for the train having the Exception Alarm. This, of course, will only happen if the AEI option on the Equipment Settings menu is enabled (YES) and the AEI subsystem is functioning properly during train passage.

```
                    .
                    .
                    .
[J] - Arrival Message ............... No
[K] - Lft/Rt Alarm Ref ............. No
[L] - Car ID With Alarm ............ No
[M] - Advanced
[X] – Exit
```

a Select **Car ID With Alarm** from the Messages menu.

The announce-car-identification setting toggles between enabled (YES) and disabled (NO). The Announce Car Identification option on the Messages menu changes. The Messages menu reappears.

b Return to step **3**.

16 Select Advanced to view more Message Settings.

```
Messages Settings (Advanced)
----------------------------------------
[A] - Announce Hot Wheels .......... Yes
[B] - Announce Differential ........ Yes
[C] - Announce High Load ........... Yes
[D] - Announce Wide Load ........... Yes
[E] - Announce Warm Bearings ....... Yes
[F] - Request EOT Timer .......... 5 min
[G] - Rebroad DTMF Code ........... 001
[H] - Num EOT Repeats ............... 0
[I] - EOT Repeat Delay ........... 5 sec
[J] - Post-Train Broadcast Delay . 5 sec
[X] - Exit
```

17 To change the **Announce Hot Wheels** setting:

The Messages Settings (Advanced) menu shows whether alarms are to be announced and/or for which train direction alarms will be announced. The Announce Hot Wheels option has four possible values:

- "**Yes**" alarm announcements are made for all detected alarms.
- "**No**" alarm announcements are suppressed for all detected alarms. For all alarms detected, the word "suppressed" will be included in the alarm description printed on the Train Detail report.
- "**N/E Only**" alarm announcements will be made for trains traveling North or East but will be suppressed for trains traveling South or West. The word "suppressed" will be included in any alarm descriptions printed on Train Detail reports for trains traveling South or West.

- ”**S/W Only**” alarm announcements will be made for trains traveling South or West but will be suppressed for trains traveling North or East. The word “suppressed” will be included in any alarm descriptions printed on Train Detail reports, for trains traveling North or East.

a Select Announce Hot Wheels from the Messages Settings (Advanced) menu.

A menu and prompt like this appear. To access any of the menu options, type the letter that corresponds to the desired setting.

```
Select Hot Wheel Announcement Mode:
[1] - Yes
[2] - N/E Only
[3] - S/W Only
[4] - No
```

b Select the desired announcement mode from the menu options.

c Return to Messages Settings (Advanced).

18 To change the **Announce Differential setting**:
The Messages Settings (Advanced) menu shows whether Differential alarms are to be announced and/or for which train direction Differential alarms will be announced. The Differential option has four possible values:

- **“Yes”** Differential alarm announcements are made for all detected Differential alarms.
- **“No”** Differential alarm announcements are suppressed for all detected Differential alarms. For all Differential alarms detected, the word “suppressed” will be included in the alarm description printed on the Train Detail report.
- **“N/E Only”** Differential alarm announcements will be made for trains traveling North or East but will be suppressed for trains traveling South or West. The word “suppressed” will be included in any Differential alarm description printed on Train Detail reports for trains traveling South or West.
- **”S/W Only”** Differential alarm announcements will be made for trains traveling South or West but will be suppressed for trains traveling North or East. The word “suppressed” will be included in any Differential alarm description printed on Train Detail reports for trains traveling North or East.

a Select **Announce Differential** from the Messages Settings (Advanced) menu.

A menu and prompt like this appear. To access any of the menu options, type the letter that corresponds to the desired setting.

```
Select Differential Announcement Mode:
[1] - Yes
[2] - N/E Only
[3] - S/W Only
[4] - No
```

b Select the desired announcement mode from the menu options. Return to Messages Settings (Advanced).

19 To change the **Announce High Load** setting:
The Messages Settings (Advanced) menu shows whether High Load alarms are to be announced and/or for which train direction High Load alarms will be announced. The Announce High Load option has four possible values:

- **"Yes"** High Load alarm announcements are made for all detected High Load alarms.
- **"No"** High Load alarm announcements are suppressed for all detected High Load alarms. For all High Load alarms detected, the word "suppressed" will be included in the alarm description printed on the Train Detail report.
- **"N/E Only"** High Load alarm announcements will be made for trains traveling North or East but will be suppressed for trains traveling South or West. The word "suppressed" will be included in any High Load alarm description printed on Train Detail reports for trains traveling South or West.
- **"S/W Only"** High Load alarm announcements will be made for trains traveling South or West but will be suppressed for trains traveling North or East. The word "suppressed" will be included in any High Load alarm description printed on Train Detail reports for trains traveling North or East.

a Select Announce High Load from the Messages Settings (Advanced) menu.

A menu and prompt like this appear. To access any of the menu options, type the letter that corresponds to the desired setting.

```
Select High Load Announcement Mode:
[1] - Yes
[2] - N/E Only
[3] - S/W Only
[4] - No
```

With the Clearance Mode parameter set for Multiplexed operation, changing the Announce High Load setting forces a matching change to the Announce Wide Load setting. In this situation, a warning message similar to the following appears on the Serial Interface.

```
*************************************************************
* Clearance Mode is configured for Multiplexed operation.  *
* Announce Wide Load changing to match Announce High Load. *
*************************************************************
```

b Select the desired announcement mode from the menu options. Return to Messages Settings (Advanced).

20 To change the **Announce Wide Load** setting:
The Messages Settings (Advanced) menu shows whether Wide Load alarms are to be announced and/or for which train direction Wide Load alarms will be announced. The Announce Wide Load option has four possible values:

- **"Yes"** Wide Load alarm announcements are made for all detected Wide Load alarms.
- **"No"** Wide Load alarm announcements are suppressed for all detected Wide Load alarms. For all Wide Load alarms detected, the word "suppressed" will be included in the alarm description printed on the Train Detail report.

- **“N/E Only”** Wide Load alarm announcements will be made for trains traveling North or East but will be suppressed for trains traveling South or West. The word “suppressed” will be included in any Wide Load alarm description printed on Train Detail reports for trains traveling South or West.
- **”S/W Only”** Wide Load alarm announcements will be made for trains traveling South or West but will be suppressed for trains traveling North or East. The word “suppressed” will be included in any Wide Load alarm description printed on Train Detail reports for trains traveling North or East.

a Select Announce Wide Load from the Messages Settings (Advanced) menu.

A menu and prompt like this appear. To access any of the menu options, type the letter that corresponds to the desired setting.

```
Select Wide Load Announcement Mode:
[1] - Yes
[2] - N/E Only
[3] - S/W Only
[4] - No
```

With the Clearance Mode parameter set for Multiplexed operation, changing the Announce Wide Load setting forces a matching change to the Announce High Load setting. In this situation, a warning message similar to the following appears on the Serial Interface.

```
************************************************************
* Clearance Mode is configured for Multiplexed operation.  *
* Announce High Load changing to match Announce Wide Load. *
************************************************************
```

b Select the desired announcement mode from the menu options. Return to Messages Settings (Advanced).

21 To change the **Announce Warm Bearings** setting:
The Messages Settings (Advanced) menu shows whether Warm Bearings alarms are to be announced. The Announce Warm Bearings option has two possible values:

- **“Yes”** Warm Bearings alarm announcements are made for bearings that exceed the Warm Bearing alarm threshold; broadcast messages will be generated as if the Absolute threshold had been exceeded.
- **“No”** Warm Bearings alarm announcements are suppressed, and no broadcast messages will be generated for bearings that exceed the Warm Bearing alarm threshold. However, any bearings found to exceed the Warm Bearing threshold will be flagged with a “Warm Bearing” indication in Train Detail reports.

a Select Announce Wide Load from the Messages Settings (Advanced) menu.

The Announce Warm Bearings setting toggles between the values Yes & No.

b Return to Messages Settings (Advanced).

22 To change the **repeat-EOT-message-timeout-period** setting:

The Messages menu shows a value for the repeat-timeout-period setting. If a nonzero value is shown, the value is the number of minutes that you have to request a repeat of the last end-of-train (EOT) message. If zero is shown, the last EOT message is always available for rebroadcast. The train crew makes the actual request for a rebroadcast. The repeated message has the word "rebroadcast" at the beginning and end of the message.

a Select **Request EOT Timer** from the Messages menu.

This prompt appears.

```
Request EOT Timer message setting (default = 10)
Enter a value between 0 and 999:
```

If the new limit has less than three digits, type leading zeros.

b Type the three-digit value.

If you type 000, the last EOT message is always available for rebroadcast. If you type 240, the train crew has four hours (that is, 240 minutes) to request a repeat of the last EOT message.

c Return to step **3**.

23 To change the **rebroadcast-DTMF-code** setting:

The Messages menu shows the rebroadcast-DTMF-code setting. The stored DTMF code is the touchtone digits that trigger a rebroadcast. Up to three digits may be entered into this setup parameter. The SmartScanNG² system monitors radio traffic. When it receives the proper DTMF code, it will rebroadcast the last end-of-train message, provided the request EOT timer hasn't expired.

```
                    .
                    .
                    .
 [G] - Rebroad DTMF Code ............ 001
 [H] - Num EOT Repeats ............... 0
 [I] - EOT Repeat Delay ........... 5 sec
 [J] - Post-Train Broadcast Delay . 5 sec
 [X] – Exit
```

a Select **Rebroad DTMF Code** from the Messages menu.

This prompt appears.

```
Rebroad DTMF Code message setting (default = )
Enter a dtmf code (Esc to clear):
```

b Type the new DTMF code or press **[Esc]**.

c If you typed one or two digits, press **[Enter]**.

The Rebroadcast DTMF Code option on the Messages menu changes, and the Messages menu reappears. If you typed only nondigits and then pressed **[Enter]**, the rebroadcast function would be turned off.

d Return to step **3**.

24 To change the **number-of-repeats** setting:

The Messages menu shows a value for how many times the EOT announcement should be repeated. Valid values range from 0 through 5. When set to zero, the EOT announcement is spoken once with no repeats. When set to five, the EOT announcement is spoken once with five repeats for a total number of six times.

```
                    .
                    .
                    .
[G] - Rebroad DTMF Code ............ 001
[H] - Num EOT Repeats ............... 0
[I] - EOT Repeat Delay ........... 5 sec
[J] - Post-Train Broadcast Delay . 5 sec
[X] - Exit
```

a Select **Num EOT Annc Repeats** from the Messages menu.

This prompt appears.

```
Num EOT Repeats message setting (default = 0)
Enter a value between 0 and 5:
```

b To not change the value, press **[Esc]** and return to step **3**.

c Type a digit less than 6.

All typed nondigits are ignored.

If you type a value greater than 5, this error message and prompt appear.

```
Invalid value specified
```

If you type an acceptable value, the Number of Repeats option on the Messages menu changes, and the Messages menu reappears.

d If you get an error message, return to step **b**.

e If you don't get an error message, return to step **3**.

25 To change the time-between-repeats setting:

The Messages menu shows a value for how many seconds should elapse between EOT announcement repeats. Valid values range from 0 through 360.

```
                    .
                    .
                    .
[H] - Num EOT Repeats ............... 0
[I] - EOT Repeat Delay ........... 5 sec
[J] - Post-Train Broadcast Delay . 5 sec
[X] - Exit
```

a Select **EOT Repeat Delay** from the Messages menu.

This prompt appears.

```
EOT Repeat Delay message setting (default = 5)
Enter a value between 0 and 999:
```

If the new value has less than three digits, type leading zeros to make it three digits long or press **[Enter]** after typing one or two digits.

b To not change the value, press **[Esc]** and return to step **3**.

26 To change the Post-Train Broadcast Delay setting:

The Messages menu shows a value for how many seconds of delay precede the EOT announcements. Valid values range from 1 through 20.

```
                    .
                    .
                    .
[H] - Num EOT Repeats ............... 0
[I] - EOT Repeat Delay ........... 5 sec
[J] - Post-Train Broadcast Delay . 5 sec
[X] - Exit
```

a Select **Post-Train Broadcast Delay** from the Messages menu.

This prompt appears.

```
Post-Train Broadcast Delay message setting (default = 5 sec)
Enter a value from 1 to 20:
```

If the new value has less than two digits, type a leading zero to make it two digits long or press [Enter] after typing one digit.

b To not change the value, press **[Esc]** and return to step **3**.

4.2.8 AEI Reader Parameters

The AEI reader parameters directly affect how the AEI readers operate to acquire tags while a train is passing the site.

To set or change any of the AEI reader parameters:

1 Be sure that the Setup menu is displayed.

The Setup menu looks like this.

```
                    .
                    .
                    .
[G] - Messages Settings
[H] - AEI Settings
[I] - Load Default Setup Parameters
                    .
                    .
                    .
```

2 Select **AEI Settings** to access menu options.

```
AEI Settings
----------------------------------------
[A] - ID Separation ............... 1 IDs
[B] - Consecutive Reads ........ 2 Reads
[C] - RF Frequency (MHz) ....... 915.000
[D] - RF Attenuation (dB) ............ 0
[E] - Multi-Track Tag Filter .. Disabled
[F] - AEI Reader Interface
[G] - Tag Reader Test
[H] - Antenna 0 Offset .. 0 inches (TO1)
[I] - Antenna 1 Offset .. 0 inches (TO1)
[X] – Exit
```

ID Separation specifies the number of intervening tags that must be read and reported before a given tag is reported again. Valid values are 1, 2, 3, and 4. The default is 2.

The Consecutive Reads setting specifies the number of times that a tag must be read before it is considered a valid (reportable) tag. Valid values are 1, 2, 3, and 4. The default is 2.

MPRX Frequency specifies the transceiver frequency of the MPRX reader.

MPRX Attenuation sets the RF attenuation in 1 dB increments over a range of 10 dB from a maximum output of 2 W at 0-dB attenuation to a minimum of 200 mW output at 10-dB attenuation.

The **Multi-Track Tag Filter**, when enabled, uses firmware algorithms to filter cross-track reads based on appended timestamps and tag data shared from adjacent readers.

The **AEI Reader Interface** allows for direct communication with the AEI reader and is used primarily for diagnostic purposes.

3 To <u>change</u> the **ID Separation** parameter:

Select the **ID Separation** option to toggle from 1 to 2, from 2 to 3, from 3 to 4, <u>or</u> from 4 to 1.

4 To change the **Consecutive Reads** parameter:

Select the **Consecutive Reads** option to toggle from 1 to 2, from 2 to 3, from 3 to 4, <u>or</u> from 4 to 1.

5 Select the **MPRX Frequency** setting to change the operating frequency.

This message appears.

```
Select a frequency:
[A] - 903.750 MHz
[B] - 911.500 MHz
[C] - 915.000 MHz
[D] - 918.500 MHz
[E] - 921.500 MHz
```

Enter frequency selection. The AEI Reader Parameters menu reappears.

6 Select **MPRX Attenuation** to attenuate the RF output signal.

This message appears.

```
RF Attenuation (dB) AEI setting (default = 0)
Enter a value from 0 to 10:
```

Enter a value “NN” (between 1 and 10), including leading zeros. This parameter sets the RF attenuation in 1 dB increments over a range of 10 dB from a maximum output of 2 W at 0-dB attenuation to a minimum of 200 mW output at 10-dB attenuation.

7 Select **Multi-Track Tag Filter** to toggle between **Enabled** and **Disabled**.
When enabled, firmware algorithms are utilized to filter out cross-track reads.

8 To enter the **AEI reader interface**, select the option.

This message appears.

```
Entering AEI Reader Interface
<Type EXIT to quit>
```

9 To leave the AEI reader interface:

a Type **EXIT**

b Press **[Enter]**.

10 To leave the AEI Reader Parameters menu and return to the Setup menu, type **X**.

This prompt appears.

```
Initialize Reader now (Y/N)
```

11 To initialize the reader, type **Y**.

The Setup menu reappears.

12 To not initialize the reader, type **N**.

The Setup menu reappears.

13 To enter the **AEI reader interface**, select the option.

This message appears.

```
Entering AEI Reader commands
(‘EXIT’ to quit)
```

14 To leave the AEI reader interface:

a Type **EXIT** (case sensitive, all uppercase)

b Press **[Enter]**.

15 To initiate the **Tag Reader Test**, select the option.

This message appears.

```
The Tag Reader Test will allow you to wave a tag in front of the
reader and the detector will produce an audible beep and print out
the tag information.

The detector will simulate a track circuit signal and energize the
antennas.
Afterwards the log will show a Train Canceled event.

Are you sure you want to continue? (y/n)
```

During the Tag Reader Test, data from AEI tags passed through the RF field will be displayed beneath this prompt.

16 To set the Antenna Offset, select the option (Antenna 0 Offset or Antenna 1 Offset).

This message appears.

```
Antenna 0 gate offset setting (default = 0 inches)

*** The OFFSET is the distance from the center of the scanning gate to the
*** center of the AEI antenna read zone.

Enter an OFFSET value from 0 to 240 inches:
```

Measure and enter the offset distance from the center of the scanning gate to the center of the antenna. If measurent is other than zero, the following prompt will appear.

```
Is the Antenna closer to TO1 or TO2?  (Current setting is TO1)
[1] - TO1
[2] - TO2
```

Enter the wheel sensor designator closest to the antenna (TO1 or TO2).

17 To leave the AEI Reader Parameters menu and return to the Setup menu, type **X**.

This prompt appears.

```
This will save the settings.
Please type 'setup' to save settings.
Press escape to abandon changes.
>
```

4.2.9 Load Default Setup Parameters

An option to load default setup parameters was included to assist installers in setting up a new system. When this menu item is selected, the parameters listed below are assigned the values listed below. A "yes" after a parameter means that it is "enabled." A "no" means that it is "disabled."

```
Alarm Settings
-------------------------------------------------------------------------------------
Absolute............................ 200     Warm Alarm Limit.................... 170
Differential........................ 115     Hot Wheel........................... 702
Cold Rails........................... 2      Cold Rail Temp...................... 10
Cold Res Counter.................... 3       Differential Enabled................ Yes

Alarm Settings (Advanced)
-------------------------------------------------------------------------------------
Carside Slope...................... 1.31     Carside Minimum..................... 155
Res Test: Minimum Rail Avg........... 25      Res Test: Minimum Wheel Avg......... 28
Bearing DSR Capture Temp............. 72      Wheel DSR Capture Temp.............. 361
Max Hot Bearings..................... 10      Max Hot Wheels...................... 32
Max Dragging Equipment............... 10

Equipment Settings
-------------------------------------------------------------------------------------
Dragger............................. Yes     Hot Wheel........................... Yes
Hot Bearing......................... Yes     High Load........................... No
Wide Load........................... No      AEI................................. Yes
Presence Hardware................... Yes     Advance Transducers................. No
AC Power Off Monitor................ Yes
Equipment Settings (Advanced)
-------------------------------------------------------------------------------------
Carside Slope....................... No      Winter Cycle................... Jan - Jan
Gate Distance.................... 24.0 in    Dragger Debounce Time........... 100 ms
Pre Train Dragger Dist............. 6 ft      Pre Train High/Wide Dist........... 0 ft
Presence Timeout Period........... 10 sec     System Voltage..................... 12 V
Resistor Test.................... Enabled    Clearance Mode................. Separate
Clearance Type............... Light Beam     Transducer Gain................. Normal
Transducer Type................ Magnetic      WILD Detector Co-Located............ No

Message Settings
-------------------------------------------------------------------------------------
Arrival Message..................... No      Customer Name...................... Yes
Axles............................... No      Speed.............................. No
Temperature......................... No      Slow............................... Yes
Power Off........................... Yes     Repeat No Defects.................. No
Length.............................. No      Cars Count......................... No
Lft/Rt Alarm Ref.................... No      Car ID With Alarm.................. No

Message Settings (Advanced)
-------------------------------------------------------------------------------------
Announce Hot Wheels................. Yes     Announce Differential............... Yes
Announce High Load.................. Yes     Announce Wide Load.................. Yes
Announce Warm Bearings.............. Yes     Request EOT Timer................ 5 min
Rebroad DTMF Code................... 001     Num EOT Repeats..................... 0
EOT Repeat Delay................... 5 sec     Post-Train Broadcast Delay........ 5 sec
```

To load the default setup parameters:

1. Be sure that the Setup menu is displayed.

   The Setup menu looks like this.

```
                    .
                    .
                    .

  [I] - Load Default Setup Parameters
  [J] - COM Port Settings
  [K] - Network Settings
  [L] - Velocity ................ Disabled
  [X] – Exit
```

2. Select **Load Default Setup Parameters**.

   This prompt appears.

```
*************************************************************
* Warning! You are about to load default setup parameters! *
*************************************************************

Are you sure? (y/n)
```

3. To not load default setup parameters:

   Type **N**.

   This message appears, followed by the Setup menu.

```
 Settings will not be saved
```

4. To load default setup parameters:

   Type **Y**.

   This message appears, followed by the Setup menu.

```
This will save the settings.
Please type 'setup' to save settings.
Press escape to abandon changes.
>
```

   Loading takes about a second. When finished, the Setup menu reappears.

4.2.10 COM1, COM2, COM3, COM4, COM5, & COM6

To change the parameters for serial port **COMx**:

1 Be sure that the Setup menu is displayed.

The Setup menu looks like this.

```
                    .
                    .
                    .
  [J] - COM Port Settings
  [K] - Network Settings
  [L] - Velocity ................ Disabled
  [X] – Exit
```

2 Select the COM Port Settings submenu to view options.

```
COM Port Settings
----------------------------------------
[A] - COM1 (Serial Interface) 19200 None
[B] - COM2 (Not Used)........ 19200 None
[C] - COM4 (Not Used)........ 19200 None
[D] - COM6 (FlashHost)....... 57600 None
[E] - RS485 (Not Used)....... 9600 None
[F] - Page Lines .................... 30
[X] – Exit
```

Select the **COMx** option to modify current settings.

```
UART Settings
----------------------------------------
[A] - Baud Rate .................. 19200
[B] - Flow Control ................ None
[X] - Exit
```

3 To change the **Baud Rate**, select the option to incrementally step through the selection options. Available settings are: 150, 300, 600,1200, 2400, 4800, 9600, 19200, 38400, 57600, and 115200.

4 To change the Flow Control setting, select the option to incrementally step through available options of None, HW (hardware), or SW (software).

5 If you are done changing the parameters for **COMx**, type **X**.

The Setup menu reappears.

4.2.11 Network Settings

To change the **Network Settings**:

1 Be sure that the Setup menu is displayed.

The Setup Menu looks like this.

```
                    .
                    .
                    .
  [J] - COM Port Settings
  [K] - Network Settings
  [L] - Velocity ................ Disabled
  [X] - Exit
```

2 Select the **Network Settings** menu.

A menu and prompt like this appear. To access/change any of the menu options, type the letter that corresponds to the desired setting.

```
  Network Settings
  ----------------------------------------
  [A] - IP Settings
  [B] - Use Wifi ....................... No
  [C] - Wifi Inactivity Timeout ... 10 min
  [D] - HTTP Port ..................... 80
  [E] - HTTPS Port .................. 8080
  [F] - FTP Port ...................... 21
  [G] - TELNET Port ................... 23
  [H] - Load Default Network Settings
  [I] - Ping
  [X] - Exit
```

The Ping option provides for testing the ability to communicate across an Ethernet network.

A successful Ping attempt will look like this:

```
Enter an IP to ping: 10.14.22.150
Pinging '10.14.22.150'... Success! (Response took 0 ticks.)
```

An unsuccessful Ping attempt will look like this:

```
Enter an IP to ping: 10.14.22.250
Pinging '10.14.22.250'... Failed!
```

4.2.12 Velocity Setting

To change the **Velocity** setting:

1 Be sure that the Setup menu is displayed.

The Setup Menu looks like this.

```
                    •
                    •
                    •
  [J] - COM Port Settings
  [K] - Network Settings
  [L] - Velocity ................ Disabled
  [X] - Exit
```

2 Select the **Velocity** menu.

A menu and prompt like this appear. To select any of the menu options, type the number that corresponds to the desired setting.

```
  Select Velocity Mode:
  [1] - Disabled
  [2] - Enabled
```

It is no longer possible to change the Velocity setting when connected to the Serial Interface through Velocity (passing through Velocity to the detector). Connecting this way and attempting to change the Velocity setting now displays the message shown below.

```
!!! You Are Connected Through Velocity -- Configuration Prohibited !!!
```

4.3 System Functions Menu

To execute one or more system functions:

1 Be sure that the Main menu is displayed.

The Main menu looks like this.

```
                    •
                    •
                    •
  [I] - Setup
  [J] - Event log
  [K] - System Functions Menu
  [L] - Replay train
  [M] - Security Menu
  [X] – Exit
```

2 Select the System Functions menu.

A menu and prompt like this appear. To access any of the System Functions menu options, type the letter that corresponds to the desired menu option.

```
System Functions Menu
----------------------------------------
[A] - Radio Test
[B] - Vocabulary Test
[C] - Radio Inhibit
[D] - Start Manual Train
[E] - 1KHz Test Tone
[F] - Auto-Calibration
[G] - Reboot System
[H] - Delete All Stored Train Data
[I] - Clear Event Log
[J] - Update Menu
[K] - Maintenance Menu
[L] - Volume Up (3)
[M] - Volume Down (3)
[N] - Resistor Baseline Data
[O] - Radio Programming Menu
[P] - Scanner Test
[Q] - Calibrate Frauscher Transducers
[R] - Virtual Gate Test
[X] - Exit
```

If a train is at the site when the System Functions menu is generated, "***** Train Is Present *****" is displayed just above the menu header for the System Functions menu. During that time, if you select any item on the System Functions menu, you will be prompted with "**Train Is Present. Continue?**" You must type **Y** to continue. Note that most items on the Systems Functions menu should <u>not</u> be performed while a train is present at the site.

3 To leave the System Functions menu and return to the Main menu:

a Type **X**.
The Main menu reappears.

b Skip the remaining steps.

4 To execute the **radio test**:

The Radio Test option is used to broadcast a short message through the speaker and through the radio. Using this option lets you verify that the speaker and radio are working properly.

At single-track sites, the text of the message is "Testing, Iowa Interstate, milepost, (*milepost number*), testing, one, two, three, four, five, four, three, two, one, testing." At double-track sites, the text of the message is "Testing, Iowa Interstate, milepost, (*milepost number*), track (*track designation*), testing, one, two, three, four, five, four, three, two, one, testing."

```
System Functions Menu
----------------------------------------
[A] - Radio Test
[B] - Vocabulary Test
[C] - Radio Inhibit
            •
            •
            •
```

a Select **Radio Test** from the System Functions menu.

If the system isn't currently making any other voice announcements, it begins the Radio Test announcement. After the announcement finishes, the System Functions menu reappears.

If the system is currently making a voice announcement, the firmware begins the Radio Test after all previously-queued announcements finish.

b While listening to the message, look at the PTT LED on the display panel.

The **PTT LED** should be lit.

If this LED isn't lit, the system's ability to send a message to the radio might be inhibited by the Radio Inhibit option on the System Functions menu. If the radio is inhibited, the results of this check are invalid.

c Return to step **3**.

5 To execute the **vocabulary test**:

The Vocabulary Test option is used to enunciate all stored speech phrases. This announcement is broadcast through the speaker but <u>not</u> <u>through</u> the radio. Therefore, it isn't affected by the Radio Inhibit option being enabled.

The text of the message is "zero, one, two, three, four, five, six, seven, eight, nine, a, alarm, alarms, axle, axles, b, beginning, box, c, car, cars, critical, d, defect, defects, detector, dragging, e, east, equipment, excess, f, fifth, first, fourth, from, g, h, have, high, hot, i, ID, in, inspect, j, k, l, left, length, load, m, main, middle, milepost, minus, n, near, no, north, not, o, of, off, **beep**, out, p, point, power, q, r, rail, rebroadcast, remainder, resistor, right, s, scanner, second, a, side, sixth, slow, south, speed, system, t, temperature, test, testing, third, through, too, total, track, u, v, w, west, wheel, wide, working, x, y, you, z, repeat, excessive, train, minute, minutes, **1/4-second beep**, at, integrity_failure, an, hbd, Iowa Interstate."

```
System Functions Menu
----------------------------------------
[A] - Radio Test
[B] - Vocabulary Test
[C] - Radio Inhibit
            •
            •
            •
```

a Select **Vocabulary Test** from the System Functions menu.

A prompt like this appears.

```
The Vocabulary Test may take several minutes to complete.

Are you sure? (y/n)

Vocabulary Test started.  Press 'Esc' to cancel.
```

If the system isn't currently making any other voice announcements, it begins the Vocabulary Test announcement. After the announcement finishes, the System Functions menu reappears.

If the system is currently making a voice announcement, the firmware begins the Vocabulary Test after all previously-queued announcements finish.

b Return to step **3**.

6 To execute the **radio inhibit**:

The Radio Inhibit option is used to prevent radio activation for three minutes. During this time, any announcements generated by the system are broadcast through the speaker but not through the radio. This feature may be overridden by recalling this submenu and then typing **N**.

```
System Functions Menu
----------------------------------------
[A] - Radio Test
[B] - Vocabulary Test
[C] - Radio Inhibit
            •
            •
            •
```

a Select **Radio Inhibit** from the System Functions menu.

This prompt appears.

```
PTT disabled for 3 minutes
```

b Select **Re-enable radio PTT** to disable Radio Inhibit.

```
System Functions Menu
----------------------------------------
[A] - Radio Test
[B] - Vocabulary Test
[C] - Re-enable Radio PTT
            .
            .
            .
```

c Return to step **3**.

7 To initiate the **Start Manual Train** function:

In Manual Train Mode, the system opens all the shutters and simulates transducer pulses for about one minute. During this time, a person can check various aspects of the installed components. In this mode, the system runs the ramp function without generating heats. The train is marked as a test train. There won't be any voltage applied to the scanner inputs.

This is a timed test that should gate approximately 164 simulated axles. You can stop this test by selecting the Stop Manual Train option.

The data generated for this test train is stored in the Test Train directory, which contains data on the last test train only. The Last Test Train report gets its data from this directory.

```
System Functions Menu
----------------------------------------
[A] - Radio Test
[B] - Vocabulary Test
[C] - Radio Inhibit
[D] - Start Manual Train
[E] - 1KHz Test Tone
            .
            .
            .
```

a Select **Start Manual Train** from the System Functions menu.

This prompt appears.

```
Speed? (default = 30 mph, max = 100 mph) 30
Axles? (default = 166, max = 5000) 166
Time limit? (default = 300 seconds, max = 1000 seconds) 300
Direction N or E? (y/n)
Broadcast test train? (y/n)

Ready to run train: 166 axles, 30 mph, 300-sec limit, N/E dir,
broadcast enabled.
Are you sure? (y/n)
```

Enter appropriate settings when prompted.

b Return to step **3**.

8 To generate the **1KHz test tone**:

The 1KHz Test Tone option is used to generate a continuous 1KHz tone for about 5 seconds. This test tone is broadcast through the speaker and through the radio.

a Select **1KHz Test Tone** from the System Functions menu.

If the system isn't currently making any other voice announcements, it begins the tone.

If the system is currently making a voice announcement, the firmware begins the tone after all previously-queued announcements finish.

b While listening to the tone, look at the PTT LEDs on the display panel.

The **PTT LED** should be lit.

If this LED isn't lit, the system's ability to send a tone to the radio might be inhibited by the Radio Inhibit option on the System Functions menu. If the radio is inhibited, the results of this check are invalid.

c Return to step **3**.

9 To start **Auto-Calibration**:

The SmartScanNG² system self-calibrates its pyrometer interface circuitry. You need only put a preheated calibrated heat source on a scanner and place the system in autocalibration mode by using the Auto-Calibration option. The system then scans all pyrometer inputs until the signal from the calibrated heat source is located. The necessary adjustments to the related interface circuitry are automatically made while the system monitors its own progress by analyzing changes in the heat signals. Once the procedure has been completed, autocalibration mode is disengaged, and the calibration results are displayed on your computer. For more details, see ***Appendix F & G - Calibration of Type2/Type3 Scanners***.

a Place a preheated calibrated heat source on the scanner to be calibrated.

b Select **Auto-Calibration** from the System Functions menu.

The SmartScanNG² system will now calibrate the channel associated with the scanner on which the heat source has been placed. Follow along on your interface screen until you see "Auto-Calibration Disengaged." This message is an indication that the system is done with the calibration procedure. To abort the process, press **[Esc]** (on your computer) or remove the heat source (from the scanner).

c When "Auto-Calibration Disengaged" is displayed on your computer, remove the calibrated heat source.

Upon completion of autocalibration, the system acquires the scanner resistor temperature baseline values. The process begins with a 20-minute wait period in which the resistors are allowed to cool down. The system counts down during this period, sounding a tone each minute. After the 20-minute cooldown period, the system opens and closes the shutters for a period of 8 minutes.

d Return to step **3**.

Calibration requests are dependent on the current battery voltage and are handled as follows:

- **Battery Okay:** Calibration proceeds normally.
- **Battery Low:** A message displays the current battery voltage and prompts the user whether to continue. These new displays appear below. If the user chooses to continue, the firmware records a "Scanner calibration requested during Low Battery (nn.nV) condition" Event Log entry where the current battery voltage appears in place of "nn.n." Calibrating during a Low Battery condition will further drain battery power, shortening the time the detector remains operating. Additionally, the resistor baseline values used during the post-train resistor integrity test correspond to the battery voltage used during acquisition of the baseline values. Gathering baseline values (which begins following calibration) during a Low Battery condition yields values that will not correspond to the values needed when the battery voltage returns to its normal operating level.

OLED Keypad

```
Battery Low (12.3V)
Calibration Is Not
Advised
Press Select to Cont
```

Web Interface

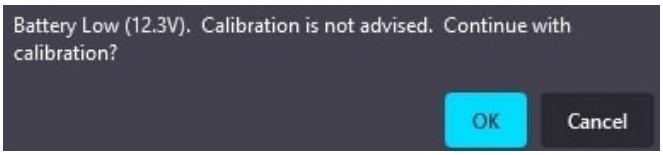

- **Battery Dead:** A message displays the current battery voltage, and the firmware prohibits calibration. These new displays appear below. The firmware will not open the scanner shutters once the battery voltage drops below the Dead Battery threshold. It does this to conserve battery power and keep the detector running as long as possible. While running, the detector continues recording axles, scanning for auxiliary alarms, making voice announcements, and (if equipped) communicating with a central office.

```
Battery voltage (11.2V) is below the Dead Battery threshold (11.8V).
  - or for 24V systems -
Battery voltage (16.8V) is below the Dead Battery threshold (18.0V).
!!! Calibration Prohibited !!!
```

OLED Keypad

```
Battery Dead (11.3V)
!!! Calibration !!!
!!! Prohibited  !!!
Press Func to Exit
```

Web Interface

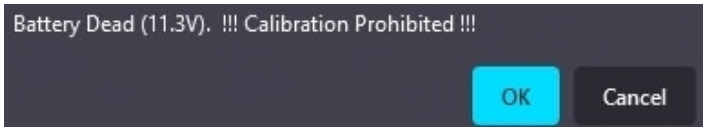

- When calibrating, the system firmware displays reminders regarding using the red and black filter frames with Type III wheel scanners. A reminder to use a black filter frame when calibrating a Type III wheel scanner appears before calibration begins. A reminder to replace the red filter frame for a Type III wheel scanner follows calibration. Examples of these new displays appear below.

Serial Interface:

```
Scanner type:
----------------------------------------
Rail 1:   Type III   Wheel 1:   Type III
Rail 2:   Type III   Wheel 2:   Type III
Is this correct? (y/n)

***INSTALL BLACK FILTER BEFORE CALIBRATING TYPE III WHEEL SCANNER***

This will start the calibration process.
Are you sure? (y/n)
      .
      .
      .
North Bearing Scanner Calibration complete.

Done

***INSTALL RED FILTER AFTER CALIBRATING TYPE III WHEEL SCANNER***
```

Web Interface:

Before Calibration

After Calibration

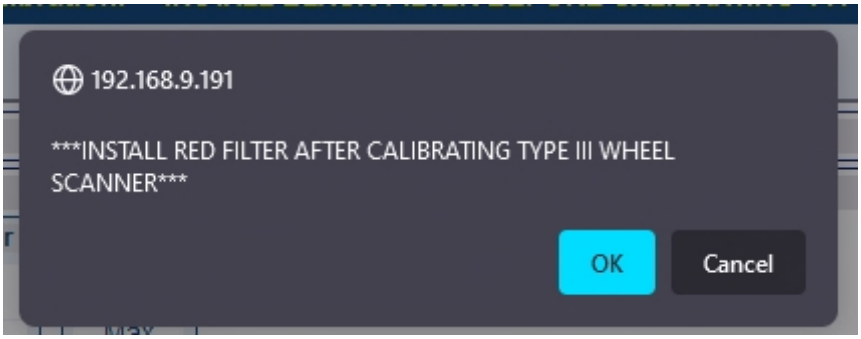

OLED Keypad:

Before Calibration	After Calibration
INSTALL BLACK FILTER	INSTALL RED FILTER
BEFORE CALIBRATING	AFTER CALIBRATING
TYPE III WHEEL SCNR	TYPE III WHEEL SCNR
Press Select to Cont	Press Select to Cont

10 To force a **system reset**:

The Reboot System option allows you to force a system reset through a remote connection. It can also be used locally.

a Select **Reboot System** from the System Functions menu.

This prompt appears.

```
Reboot System
Are you sure? (y/n)
```

b To not reset the system:

- Type **N**.

  The System Functions menu reappears.

- Return to step **3**.

c To reset the system, type **Y**.

This message appears.

```
Restarting in 2 seconds
Waiting 2sec to start 'A' to abort
Configured IP = 0.0.0.0
Configured Mask = 0.0.0.0
MAC Address= 00:03:f4:08:8c:fe

Comm is booting...
Starting telnet task on port 23... running.


The system has finished booting.
```

After a few seconds, the Main menu reappears.

d Return to step **3**.

11 To **delete all stored train data**:

The Delete All Stored Train Data option allows you to erase all stored train data. This encompasses all data on the trains in the Trains directory, Exceptions directory, and Test Train directory. After deleting all the train data, there isn't any way of regenerating it. The data is gone forever.

```
            •
            •
[G] - Reboot System
[H] - Delete All Stored Train Data
[I] - Clear Event Log
[J] - Update Menu
[K] - Maintenance Menu
            •
            •
            •
```

a Select **Delete All Stored Train Data** from the System Functions menu.

This prompt appears.

```
Are you sure? (y/n)
```

b To not delete all stored train data:

- Type **N**.

  The System Functions menu reappears.

- Return to step **3**.

c To delete all stored train data, type **Y**.

This message appears.

```
Train data cleared.
```

d Return to step **3**.

12 To **delete all events** stored in the Event Log:

The Clear Event Log option is used to erase all events stored in the Event Log and displayed on the Event Log report. After deleting the log, there isn't any way of regenerating it. The data is gone forever.

```
            •
            •
[G] - Reboot System
[H] - Delete All Stored Train Data
[I] - Clear Event Log
[J] - Update Menu
[K] - Maintenance Menu
            •
            •
            •
```

a Select **Clear Event Log** from the System Functions menu.

This prompt appears.

```
Are you sure? (y/n)
```

b To not delete all events stored in the Event Log:

- Type **N**.

  The System Functions menu reappears.

- Return to step **3**.

c To delete all events stored in the Event Log, type **Y**.

The System Functions menu reappears.

d Return to step **3**.

13 Update Menu:

```
            .
            .
[I] - Clear Event Log
[J] - Update Menu
[K] - Maintenance Menu
            .
            .
            .
```

a Select **Update Menu** from the System Functions menu.

This prompt appears.

```
 Update Menu
 ----------------------------------------
 [A] - Select Update File
 [X] – Exit

 Select update file:
 [A] - IAIS_01-00.ng
 Are you sure you want to start the update process?
 This will erase all stored train data and clear the Event Log.
Continue? (y/n)
 Extracting update files
 Extracting... Read 3929101 of 3929101 bytes (100%)
 Extraction complete!
 File extracted
 Sending update files to Analyzer
 Successfully sent files to Analyzer
 Update is now pending and must be verified before it's applied.

 SmartSCAN NG2, MP/KP:0001.2, Track:Single
 07/26/2022 16:28:49, 13.8V, 42°F
 Update Menu
 ----------------------------------------
 [A] - Select Update File
 [B] - Verify Pending Update - IAIS_01-00.ng 10/24/2022 10:50:23
 [X] - Exit

 Verifying...
 Comm successfully verified
 Analyzer verification success
 Verification complete. Result: success

 SmartSCAN NG2, MP/KP:0001.2, Track:Single
 07/26/2022 16:29:40, 13.8V, 42°F
 Update Menu
 ----------------------------------------
 [A] - Select Update File
 [C] - Apply Pending Update - IAIS_01-00.ng 10/24/2022 10:50:23
 [X] - Exit
```

b Follow the prompts above to select, verify, and apply updates.

14 To view **the** maintenance menu:

```
            .
            .
[G] - Reboot System
[H] - Delete All Stored Train Data
[I] - Clear Event Log
[J] - Update Menu
[K] - Maintenance Menu
            .
            .
            .
```

Select the **Maintenance Menu** from the System Functions menu.

A prompt like this appears.

```
Maintenance Menu
----------------------------------------
[A] - View maintenance statistics
[B] - Reset System Health
[C] - Maintenance email list
[X] – Exit
```

15 To view maintenance statistics:

Select the **View Maintenance Statistics** option from the maintenance menu.

Information like this is displayed.

```
Maintenance information gathered over 1 days
Positive numbers indicate an increase, negative indicates a decrease.
-------------------------------------------------------------------------
Metric (per day)                 percent change      Weighted value    Limit   Problem
-------------------------------------------------------------------------
Number of Trains                          0            (  0.000000)         0      No
Low Miscount                              0            (  0.000000)        50      No
High Miscount                             0            (  0.000000)        50      No
Average Temperature 0                     0            (  0.000000)        50      No
Average Temperature 1                     0            (  0.000000)        50      No
Average Temperature 2                     0            (  0.000000)        50      No
Average Temperature 3                     0            (  0.000000)        50      No
Cold Rail 0                               0            (  0.000000)        50      No
Cold Rail 1                               0            (  0.000000)        50      No
Cold Rail 2                               0            (  0.000000)        50      No
Cold Rail 3                               0            (  0.000000)        50      No
Average miscount                          0            (  0.000000)         0      No
Average voltage percentage                0            (  0.000000)         0      No
```

16 To reset system health:

```
Maintenance Menu
----------------------------------------
[A] - View maintenance statistics
[B] - Reset System Health
[C] - Maintenance email list
[X] - Exit
```

a Select **Reset System Health** from the Maintenance menu.

A prompt like this appears.

```
Resetting the system health will clear the System Warning light.
The maintenance report will reset its train count, and only new
trains will be counted towards it.

Are you sure you want to continue? (y/n)
```

b To not reset system health:

- Type **N**.

  The Maintenance Menu reappears.

c To reset system health, type **Y**. This prompt appears.

```
System health has been reset
```

The Maintenance Menu reappears.

16 To access the **Maintenance email list**:

```
Maintenance Menu
----------------------------------------
[A] - View maintenance statistics
[B] - Reset System Health
[C] - Maintenance email list
[X] - Exit
```

a Select **Maintenance email list** from the Maintenance menu.

A prompt like this appears.

```
Maintenance email list
----------------------------------------
[A] - user@southern-tech.com
[P] - New email address
[X] - Exit
```

b Select **New email address** to add a new address or select existing address to edit or delete from list.

c Type X to return to the Maintenance menu.

17 To adjust speaker volume:

```
                .
                .
                .
   [L] - Volume Up (3)
   [M] - Volume Down (3)
   [N] - Resistor Baseline Data
                .
                .
                .
```

There are 10 selectable volume levels (0-9). Level 0 is the minimum volume, and Level 9 is the maximum volume. The current volume setting is indicated in parentheses.

a From the System Functions menu, select **Volume up** to increment the current volume level or **Volume down** to decrement level.

b Return to step **3**.

18 To view **Resistor Baseline Data**:

```
                .
                .
                .
      [N] - Resistor Baseline Data
      [O] - Radio Programming Menu
      [P] - Scanner Test
      [Q] - Calibrate Frauscher Transducers
      [R] - Virtual Gate Test
      [X] – Exit
```

a Select Resistor Baseline Data from the System Functions menu.

Data like this appears.

```
Resistor Data
 ---------------------------------------------------------------------------------------
 VOLTS AMB DATE     TIME  STATUS   30  40  50  60  70  80  90 100 110 120 130     Offset
      140 160 180 200 220 240 260 280 300 320 340 360 380 400 420 440 460 480
 ---------------------------------------------------------------------------------------
 Rail 1  (Type III)
 13.4   56 05/16/22 11:49 VALID   172,174,178,178,180,182,183,186,187,189,190
      192,194,199,200,206,205,210,214,217,219,222,225,228,232,235,238,241,244        0
 Rail 2  (Type III)
 13.0   56 04/28/22 09:26 VALID   205,208,209,212,214,215,217,220,221,224,226
      227,231,236,240,244,248,251,256,260,263,267,271,275,279,283,288,292,296        1
 Wheel 1 (Type III)
 13.0   56 04/28/22 09:26 VALID   316,317,318,318,324,322,326,331,332,334,338
      339,342,347,354,358,362,366,371,378,381,385,390,395,399,404,409,414,418       15
 Wheel 2 (Type III)
 13.0   56 04/28/22 09:26 VALID   328,330,332,334,335,337,343,345,346,350,350
      351,357,361,367,372,376,381,384,389,393,398,403,407,412,416,421,425,430        0
```

For the resistor integrity test that is performed after train passage, there are two methods used to calculate the expected resistor temperature. The baseline resistor integrity test method requires the prerequisite of valid resistor baseline data to be stored in non-volatile memory. Until the system acquires this data, it applies the interim resistor integrity test method to each train. The resistor data used in the baseline resistor integrity test method appears at the bottom of the System Status report.

Included in the data above is a resistor heat profile of each scanner resistor, which covers a period of 30 to 480 seconds in 10 and 20-second intervals. The differences in resistor heat between the two scanners are due to the cable lengths used in this example. Additional items in the data are the battery voltage measured with the shutters open, the date and time of the data acquisition, and the status of the heat profile data.

In this example, the status of both sets of resistor data is “VALID,” meaning they are being used in the baseline integrity test for each train. There are two other possibilities for status, pending and invalid. If the word “PENDING” appears in the status column, the system is waiting for the resistors to cool before acquiring resistor data or for the battery to charge to 12.5 volts (12V system) or 22.0 volts (24V system). “INVALID” indicates that the system has tried twice and could not acquire valid resistor data. In either case, the system applies the interim integrity test to passing trains, which doesn't require resistor baseline data.

The system acquires the resistor data 20 minutes after the user calibrates the scanners with the autocalibration function. The resistor data acquisition runs unattended. Twenty minutes is the cooling period required to allow the resistors to return to ambient temperature after autocalibration. If a train should interrupt the cooling period, the resistor data acquisition runs 20 minutes after the shutters close following the passage of the train.

During the resistor-cooling period, the system announces through the speaker the following. These announcements aren't broadcast over the radio.

```
A beep sounds once per minute until two minutes before the resistor
test.

At two minutes until the test, "Scanner resistor test beginning in 2
minutes" is voiced.

At one minute until the test, "Scanner resistor test beginning in 1
minute" is voiced.
```

After the resistor cooling period:

As the test begins, "Testing" is voiced. During this time, the word PENDING appears in the status column of the Resistor Data section.

If the test is successful, "System working" is voiced. The word VALID appears in the status column of the Resistor Data section, signifying that the baseline test applies to each passing train.

If the test isn't successful, "Scanner resistor test beginning in two-zero minutes" is voiced, meaning that the system will try once more after 20 minutes to acquire an accurate resistor heat profile. During this time, the word PENDING appears in the status column of the Resistor Data section. If the test fails a second time, the word INVALID appears in the same column. The system applies the interim integrity test to each passing train while either PENDING or INVALID appears.

19 To access **Radio Programming Menu**:

On the Systems Functions menu is the Radio Programming Menu. This menu includes submenus that allow you to select active radio channels, program the operating frequencies, adjust audio deviation levels, and select carrier detect levels. Programming is available only for Ritron DTX radios. When using the model 2300-375 Dual-Track Interface, the Ritron DTX radio is programmable from the Track-1 SmartSCAN NG² Defect Detector.

```
              .
              .
              .
  [O] - Radio Programming Menu
  [P] - Scanner Test
  [Q] - Calibrate Frauscher Transducers
  [R] - Virtual Gate Test
  [X] – Exit
```

Select **Radio Programming Menu** from the System Functions menu.

For Ritron radios, a menu like this appears (the displayed values are the defaults).

```
Identifying radio type...   ...   ...   .
Reading radio data...   ...   ...   ...   ...   ...   ...   ...

SmartSCAN NG2, MP/KP:0001.2, Track:Single
03/19/2022 13:41:27, 13.8V, 54°F
DTX-160                          Firmware version: 1.05
Radio Programming Menu                Transmit  Receive
-------------------------------------------------------
[A] - Channel 1..................... 160.320   160.320
[B] - Channel 2..................... 160.410   160.410
[C] - Channel 3..................... 160.515   160.515
[D] - Channel 4..................... 160.470   160.470
[E] - Channel 5..................... 160.785   160.785
[F] - Channel 6..................... 160.830   160.830
[G] - Channel 7..................... 160.875   160.875
[H] - Channel 8..................... 161.550   161.550
[I] - Carrier Detect On/Off (-dBm) ...... 110.0 / 115.0
[J] - Current channel .............................. 1
[X] - Exit
```

Note: Radio menu cannot be accessed unless a Ritron DTX radio is plugged into the internal radio connector.

Radio Frequency Setup

The transmit and receive frequencies can be programmed for each of the eight available channels. Select the channel number to change its frequency designations. A prompt like this will appear.

```
            Transmit  Receive
            --------  -------
Channel 1 - 160.515   160.515

Enter new transmit frequency (###.###): 160.515
Enter new receive frequency (###.###): 160.515

Radio will not be programmed until you leave the menu and save
settings.
Enter new receive frequency (###.###):
```

Input format **###.###** where '#' may be 0-9. Include leading and trailing zeroes. These values must be between 160.215 and 161.565. Once you have made your changes, you must exit the radio menu and the equipment menu and save the settings. The radio will then begin programming the new frequencies. If you attempt to enter the Radio Frequency Menu when the radio is not plugged in or is not responding, you will receive the message "Radio channels not available, radio not responding." You can also check to see if the Radio is not responding by looking at the System Status Report under System Warnings. After booting up, the system takes about a minute to recognize the radio.

Carrier Detect On/Off Level

The CD (Carrier Detect) LED is an indication that the system is experiencing radio traffic. It operates similarly to squelch. If the CD LED is lit when there is no activity on the frequency, then it is recommended that the sensitivity be reduced by changing the Carrier Detect On and Off levels. The factory default settings are 110 -dBm for carrier detect on, and 105 -dBm for carrier detect off. These settings rarely need to be adjusted and should be done so only by a qualified radio technician. For proper operation, the carrier detect on value should always be higher than the carrier detect off value. The difference between the two values represents the squelch hysteresis and is used to prevent squelch chatter when the received signal is near the squelch setting values. Typical hysteresis should be 5 dB.
Select **Carrier Detect ON/OFF,** and a prompt like this will appear.

```
The default value for Carrier Detect On is 110.0 (-dBm)
Enter new Carrier Detect On (-dBm) value between 060.0 and 127.0
(###.#):
```

Select **Current Channel** to activate the desired channel, and a prompt like this will appear.

```
Select a channel:
[A] - Channel 1
[B] - Channel 2
[C] - Channel 3
[D] - Channel 4
[E] - Channel 5
[F] - Channel 6
[G] - Channel 7
[H] - Channel 8
[I] - Hardware control
```

20 To initiate the **Scanner Test**:

```
            .
            .
            .
 [O] - Radio Programming Menu
 [P] - Scanner Test
 [Q] - Calibrate Frauscher Transducers
 [R] - Virtual Gate Test
 [X] – Exit
```

The scanner test function allows you to verify scanner accuracy. Place a calibrated heat source over a scanner's aperture and initiate the test. The detector will scan and display the temperature.

Select Scanner Test from the System Functions menu.

Test results like these appear.

```
East rail bearing scanner pot: 75
West rail bearing scanner pot: 72

The test will time out after 10 minutes
You can end the test early by pressing any key.

Beginning test...

East bearing   West bearing
     180             3
```

21 To perform a **Calibrate Frauscher Transducers**:

```
            .
            .
            .
[P] - Scanner test
[Q] - Calibrate Frauscher Transducers
[R] - Virtual gate test
[X] - Exit
```

a Select **Calibrate Frauscher Transducers** from the System Functions menu.

A prompt like this appears.

```
Which transducer?
[A] - Transducer 1
[B] - Transducer 2
[C] - Both
```

Select a transducer (or both) to initiate calibration.

```
Are you sure? (y/n)

Sending calibration signal...
Calibration started, please wait up to 60 seconds...
Calibration complete
Transducer 1: Success
```

b Type any key to return to the System Functions menu.

c Return to step **3**.

To perform a **Virtual gate test**:

```
            .
            .
            .
[P] - Scanner test
[Q] - Calibrate Frauscher Transducers
[R] - Virtual gate test
[X] - Exit
```

a Select **Virtual gate test** from the System Functions menu.

A prompt like this appears.

```
Select a scanner:
[1] - East Rail
[2] - West Rail
[3] - East Wheel
[4] - West Wheel
```

Select a scanner to initiate the test.

```
Are you sure? (y/n)

You have 2 minutes to test.
Test running, press any key to abort the test...
```

While in Virtual Gate Test Mode, the goal is to simulate a wheel that passes over the gating transducers and then continues moving to the scanner under test. The system notifies you when the simulated wheel is in the virtual gate area by cycling the shutters. The following steps describe how to use the Virtual Gate Test Mode.

- From the Virtual Gate Test Mode menu, select a scanner in which you want to see its Virtual Gate position.
- Swipe across the Gating Transducers with a metal object in the direction of the scanner under test. Maintain a speed faster than 1.6 seconds between sensors.
- Swipe across the sensors again. However, this time continue moving the metal object to the scanner under test while maintaining a constant speed.
- The shutters rapidly cycle one time to indicate when the system is looking for heat in the virtual window located at the scanner, which should be at the time that the metal object (simulated axle) passes the scanner. *If the shutters do not cycle, the entry for the closest transducer (TO1 or TO2) may be incorrect.*
- Simulating various axle speeds, repeat as needed to confirm settings.

The test mode runs for two minutes before timing out. Otherwise, any keypress ends the session. Rapid shutter flutter is an indication that two minutes have expired and the test has ended automatically. The event log records a canceled train at the end of the testing session.

b Type any key to return to the System Functions menu.

c Return to step **3**.

4.4 Replay EOT Announcement

The EOT message for every train that is stored in long-term memory can be replayed through the local speaker. The replaying of the EOT message does not activate the PTT, so it isn't broadcast over the radio.

To replay the train announcement for a given train:

1. Be sure that the Main menu is displayed.

   The Main menu looks like this.

```
SmartSCAN NG2, MP/KP:1234.5, Track:North
09/30/2022 15:41:20, 11.7V, 73°F
Main Menu - Comm
----------------------------------------
[A] - Train Summary
[B] - Train Detail
[C] - Exception Summary
[D] - Exception Detail
[E] - System Status Report
[F] - Last Train
[G] - Train DSRs
[H] - AEI Diagnostic
[I] - Setup
[J] - Event Log
[K] - System Functions Menu
[L] - Replay Train
[M] - Security Menu
[X] – Exit
```

2. Select **Replay train**.

   These prompts appear.

```
Enter train number:

Is train from Exception Summary report? (y/n)

Text only? (y/n)
```

3. Type the train number. If you type fewer than four digits, press **[Enter]**.
4. Indicate whether the train number you entered was retrieved from the Exception Summary Report. Type "**Y**" if it was.
5. If you want only to have the message text printed to your computer terminal (don't also play the audio through the speaker) – Type "**Y**" in response to the prompt "**Text only?**".

4.5 System Security

This menu is only available during the initial setup or when logged in with an administrative password.
To view or change system security settings:

Be sure that the Main menu is displayed.

The Main menu looks like this.

```
SmartSCAN NG2, MP/KP:1234.5, Track:North
09/30/2022 15:41:20, 11.7V, 73°F
Main Menu - Comm
----------------------------------------
[A] - Train Summary
[B] - Train Detail
[C] - Exception Summary
[D] - Exception Detail
[E] - System Status Report
[F] - Last Train
[G] - Train DSRs
[H] - AEI Diagnostic
[I] - Setup
[J] - Event Log
[K] - System Functions Menu
[L] - Replay Train
[M] - Security Menu
[X] - Exit
```

Select the **Security Menu**. This menu/prompt appears.

```
Security Menu
----------------------------------------
[A] - Admin password not set
[B] - User password not set
[C] - Change wifi password
[X] – Exit
```

System login with an administrative password allows all access to system menus.

System login with a user password allows access to report menus and system functions menu but restricts access to the setup menu and security menu.

Select an option to set or change the password.

```
Enter a new password (20 character maximum):
```

5.0 Web/WiFi User Interface

The web/WiFi interface allows **on-site** and **off-site** access to the system. This interface allows the user to view reports and modify system parameters.

To use the WiFi interface locally, you need:

- A phone, tablet, or computer with WiFi capability
- Communications browser, which is installed on the device

For remote access via a web browser:

- A computer with internet connectivity
- A SmartScanNG² with Ethernet connectivity

The SmartScanNG² web interface provides the following:

- Train Summary report
- Train Detail reports
- System Status report
- System configuration
- Event Log report
- Software update

To connect to the SmartScanNG² remotely with a web browser, the controller module must have Ethernet connectivity routed to the RJ45 connector, as shown below.

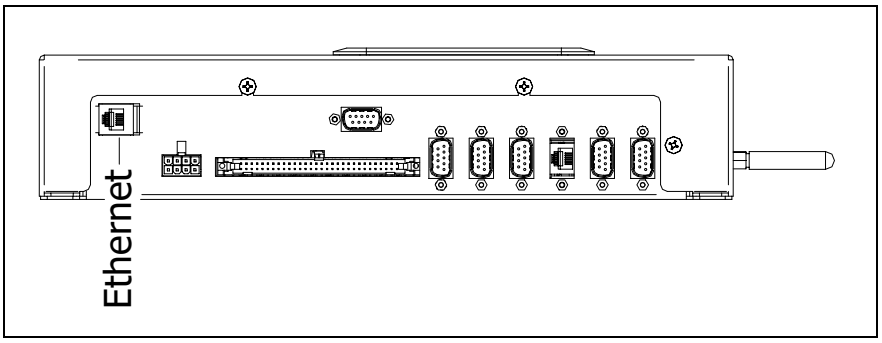

To make a local wireless connection, the WiFi setting must be enabled on the SmartScanNG². Search for and select the NG network on your wireless device. Enter the correct WiFi password to make a successful network connection.

To view the web page for your SmartScanNG², open a web browser on your computer. Enter the unit's IP address into the address bar of your browser.

See the example below. The contents of your web page will be different.

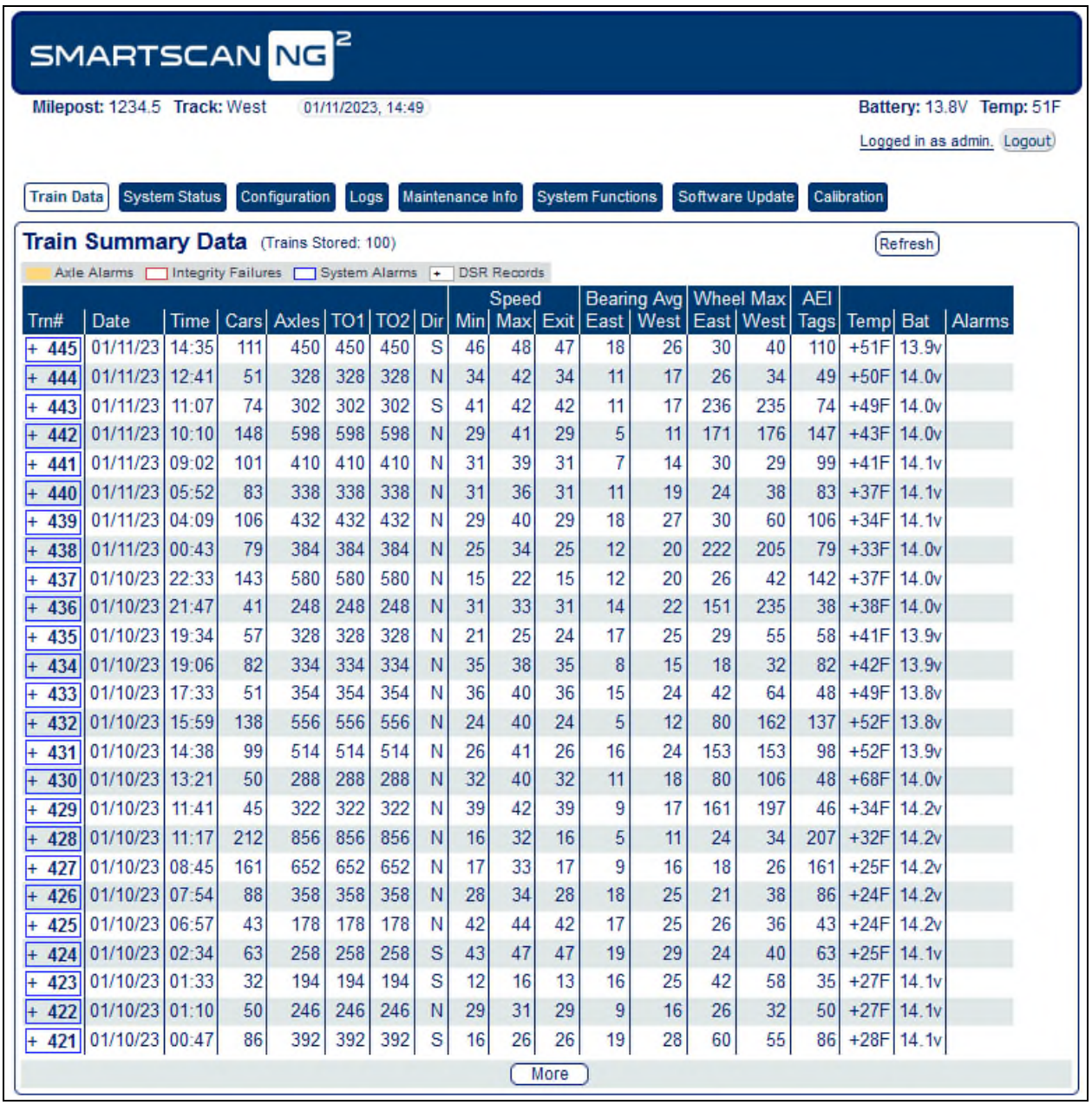

Trn#	Date	Time	Cars	Axles	TO1	TO2	Dir	Speed Min	Speed Max	Speed Exit	Bearing Avg East	Bearing Avg West	Wheel Max East	Wheel Max West	AEI Tags	Temp	Bat	Alarms
+ 445	01/11/23	14:35	111	450	450	450	S	46	48	47	18	26	30	40	110	+51F	13.9v	
+ 444	01/11/23	12:41	51	328	328	328	N	34	42	34	11	17	26	34	49	+50F	14.0v	
+ 443	01/11/23	11:07	74	302	302	302	S	41	42	42	11	17	236	235	74	+49F	14.0v	
+ 442	01/11/23	10:10	148	598	598	598	N	29	41	29	5	11	171	176	147	+43F	14.0v	
+ 441	01/11/23	09:02	101	410	410	410	N	31	39	31	7	14	30	29	99	+41F	14.1v	
+ 440	01/11/23	05:52	83	338	338	338	N	31	36	31	11	19	24	38	83	+37F	14.1v	
+ 439	01/11/23	04:09	106	432	432	432	N	29	40	29	18	27	30	60	106	+34F	14.1v	
+ 438	01/11/23	00:43	79	384	384	384	N	25	34	25	12	20	222	205	79	+33F	14.0v	
+ 437	01/10/23	22:33	143	580	580	580	N	15	22	15	12	20	26	42	142	+37F	14.0v	
+ 436	01/10/23	21:47	41	248	248	248	N	31	33	31	14	22	151	235	38	+38F	14.0v	
+ 435	01/10/23	19:34	57	328	328	328	N	21	25	24	17	25	29	55	58	+41F	13.9v	
+ 434	01/10/23	19:06	82	334	334	334	N	35	38	35	8	15	18	32	82	+42F	13.9v	
+ 433	01/10/23	17:33	51	354	354	354	N	36	40	36	15	24	42	64	48	+49F	13.8v	
+ 432	01/10/23	15:59	138	556	556	556	N	24	40	24	5	12	80	162	137	+52F	13.8v	
+ 431	01/10/23	14:38	99	514	514	514	N	26	41	26	16	24	153	153	98	+52F	13.9v	
+ 430	01/10/23	13:21	50	288	288	288	N	32	40	32	11	18	80	106	48	+68F	14.0v	
+ 429	01/10/23	11:41	45	322	322	322	N	39	42	39	9	17	161	197	46	+34F	14.2v	
+ 428	01/10/23	11:17	212	856	856	856	N	16	32	16	5	11	24	34	207	+32F	14.2v	
+ 427	01/10/23	08:45	161	652	652	652	N	17	33	17	9	16	18	26	161	+25F	14.2v	
+ 426	01/10/23	07:54	88	358	358	358	N	28	34	28	18	25	21	38	86	+24F	14.2v	
+ 425	01/10/23	06:57	43	178	178	178	N	42	44	42	17	25	26	36	43	+24F	14.2v	
+ 424	01/10/23	02:34	63	258	258	258	S	43	47	47	19	29	24	40	63	+25F	14.1v	
+ 423	01/10/23	01:33	32	194	194	194	S	12	16	13	16	25	42	58	35	+27F	14.1v	
+ 422	01/10/23	01:10	50	246	246	246	N	29	31	29	9	16	26	32	50	+27F	14.1v	
+ 421	01/10/23	00:47	86	392	392	392	S	16	26	26	19	28	60	55	86	+28F	14.1v	

The web page header includes the site's Milepost, Track designator, Date, Time, Battery voltage, Temperature, and Log in.

The main page includes five tabs. Train Data, System Status, Configuration, Log, and Software Update.

5.1 Train Data

To view the train data, left-click the **Train Data** tab. The Train Summary Data will be displayed as depicted in the example on the previous page.

To view a train detail report, slide the mouse pointer to highlight the desired train number in Train Summary Report. Left-click to select the train. A new window pops up for the **Train Details** report. See the example below.

Train Details - Train #8 — **Milepost: 0001.2**

Date: 01/31/23	**Axles:** 432	**Speed**	**Train Length:** 5915	**Amb. temp.:** +27F
Time: 08:09	**T01:** 432	**Min:** 49	**Shutters Open:** 94 sec	**Battery:** 13.6v
Dir: South	**T02:** 432	**Max:** 49		
	Cars: 103	**Avg:** 49		
		Exit: 49		

Scanner Performance

Scanner	Max	Avg	Resistor Read	Resistor Req		CF
East Bearing	15	15	187	184	B	0
West Bearing	15	15	187	185	B	0
East Wheel	42	42	303	294	B	0
West Wheel	44	43	304	294	B	0

Resistor Test Mode: Enabled

Alarm Limits

Alarm	Limit
Absolute	200
Warm	170
Differential	115
Hot Wheel	702
Carside Slope	1.31
Carside Min	155
Cold Rail Temp	10
Announce Hot Wheels	Yes
Announce High Load	Yes
Announce Wide Load	Yes
Announce Differential	Yes

AEI System Data

Tags Read	
Antenna 0	103
Antenna 1	103
Length(AEI)	6514

System Alarms

None.

Integrity Failures

None.

Axle Alarm Summary

None.

Show Announcements Show DSR Charts

		Bearing		Wheel						
Car	Axle	East	West	East	West	ON	OFF	PW1	PW2	Alarms
CSXT 729										
1	1	15	15	42	42	27	3069	18	18	
	2	15	15	42	44	27	49	18	18	
	3	15	15	42	44	27	49	18	18	
	4	15	15	42	44	27	422	18	18	
	5	15	15	42	42	27	49	18	18	
	6	15	15	42	42	27	49	18	18	
TBOX 667179										
2	7	15	15	42	44	27	112	18	18	
	8	15	15	42	44	27	50	18	18	
	9	15	15	42	44	27	49	18	18	
	10	15	15	42	44	27	422	18	18	
	11	15	15	42	42	27	49	18	18	
	12	15	15	42	44	27	49	18	18	

•
•
•

5.2 System Status

To view the system status, left-click the **System Status** tab. Grab and drag the slider bar to view the full range of system settings. See the example depicted below.

•
•
•

5.3 Configuration

To view the system configuration settings, left-click the **Configuration** tab. Then left-click the category tabs to view or edit the various parameters. If necessary, grab and drag the slider bar to view the full range of system settings. See the samples depicted below.

To modify the current setting, click on the parameter field and type the new value. The **Apply Changes b**utton will be outlined in red when changes have been entered. Left-click the **Apply Changes** button to save changes. An “Update Successful” message will appear.

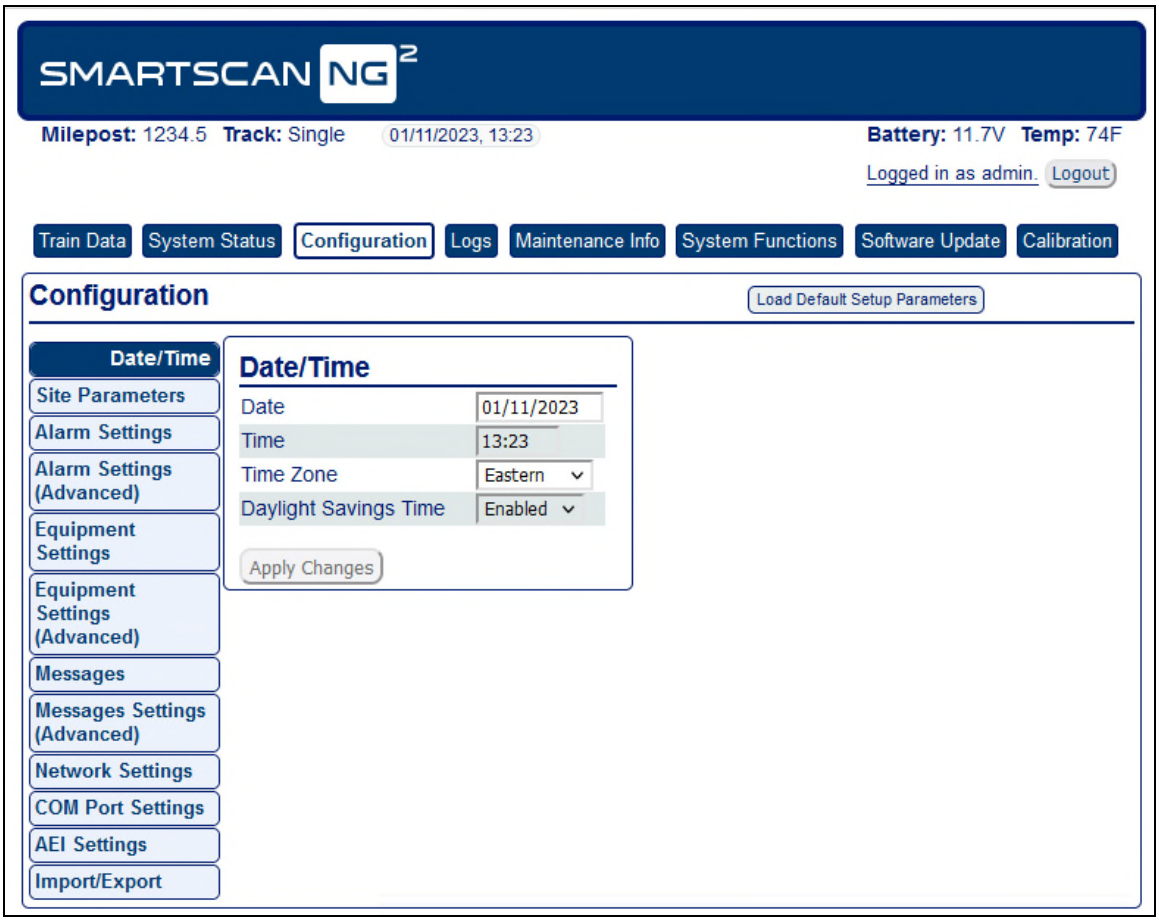

Date/Time Tab

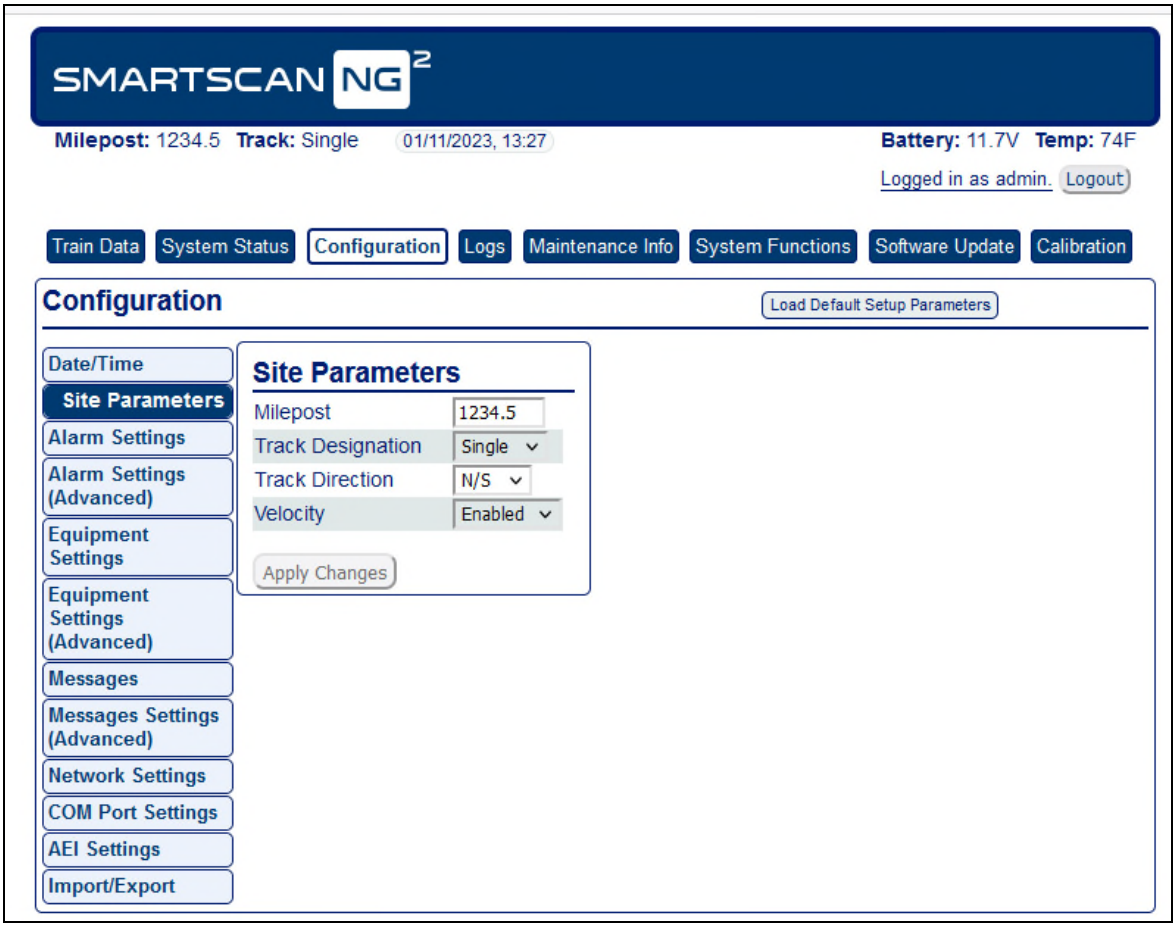

Site Parameters Tab

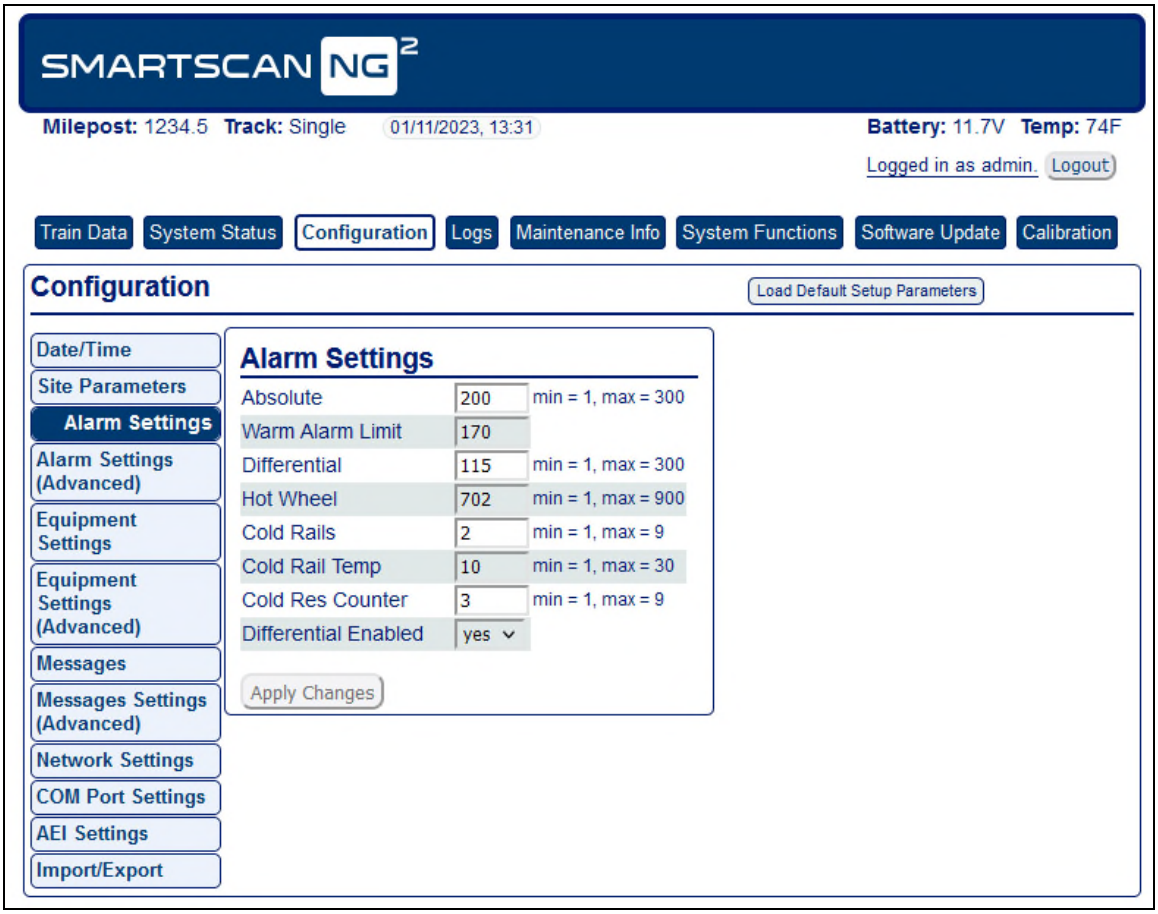

Alarm Settings Tab

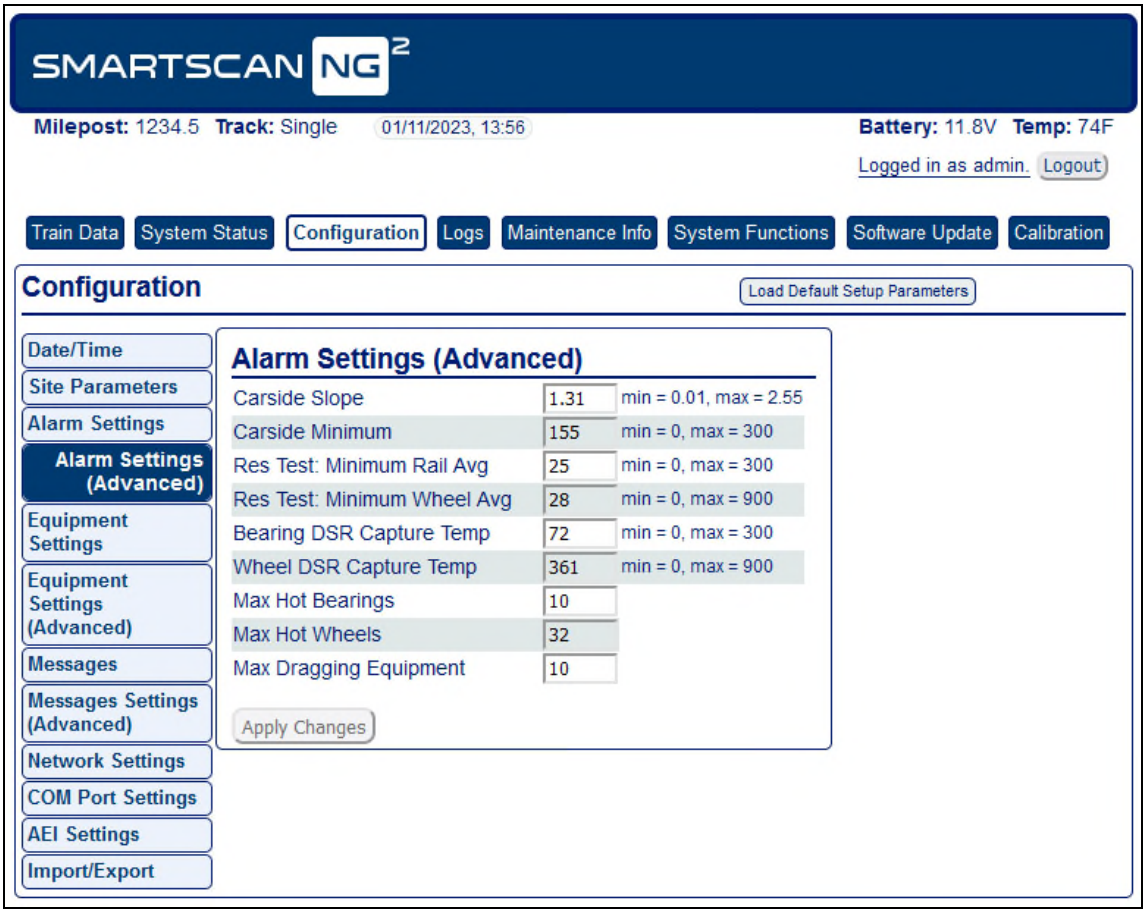

Alarm Settings (Advanced) Tab

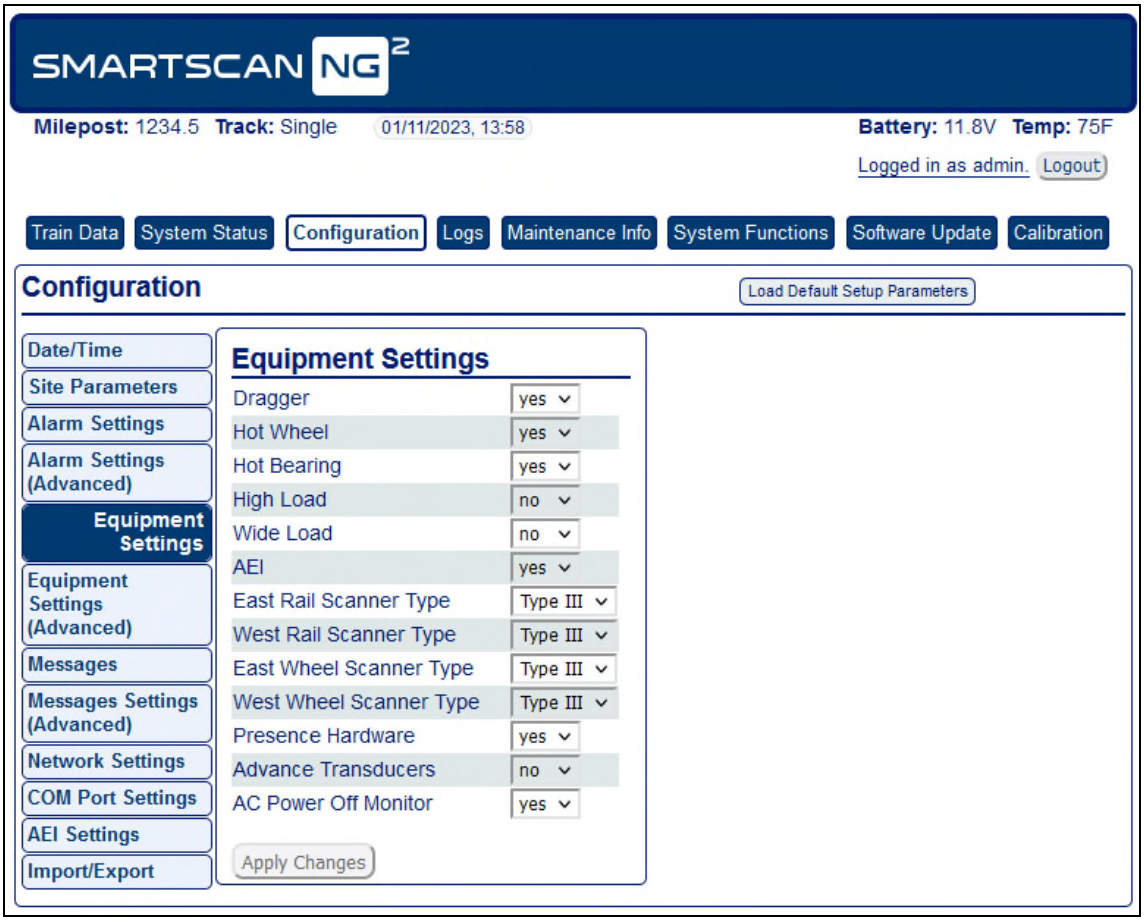

Equipment SettingsTab

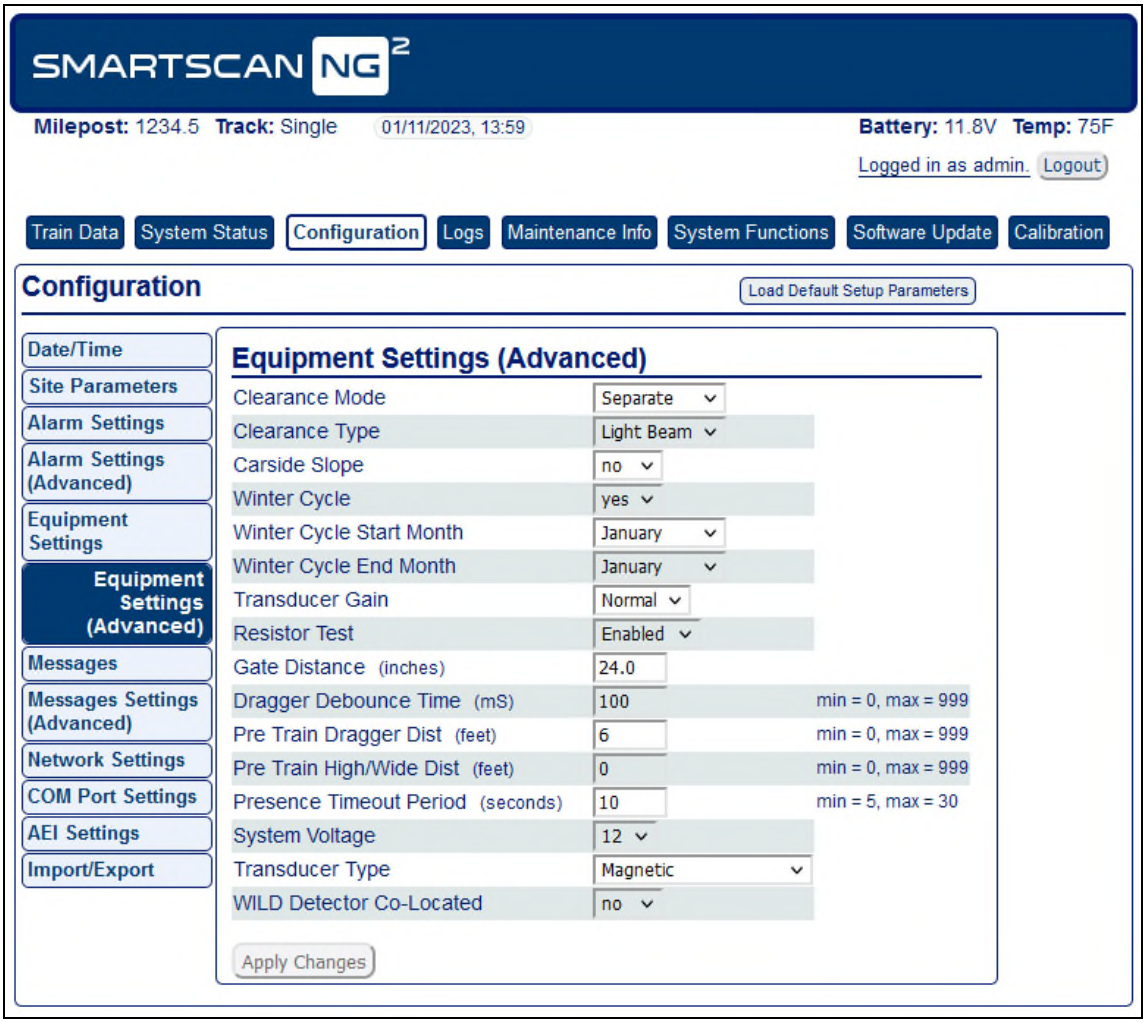

Equipment Settings (Advanced) Tab

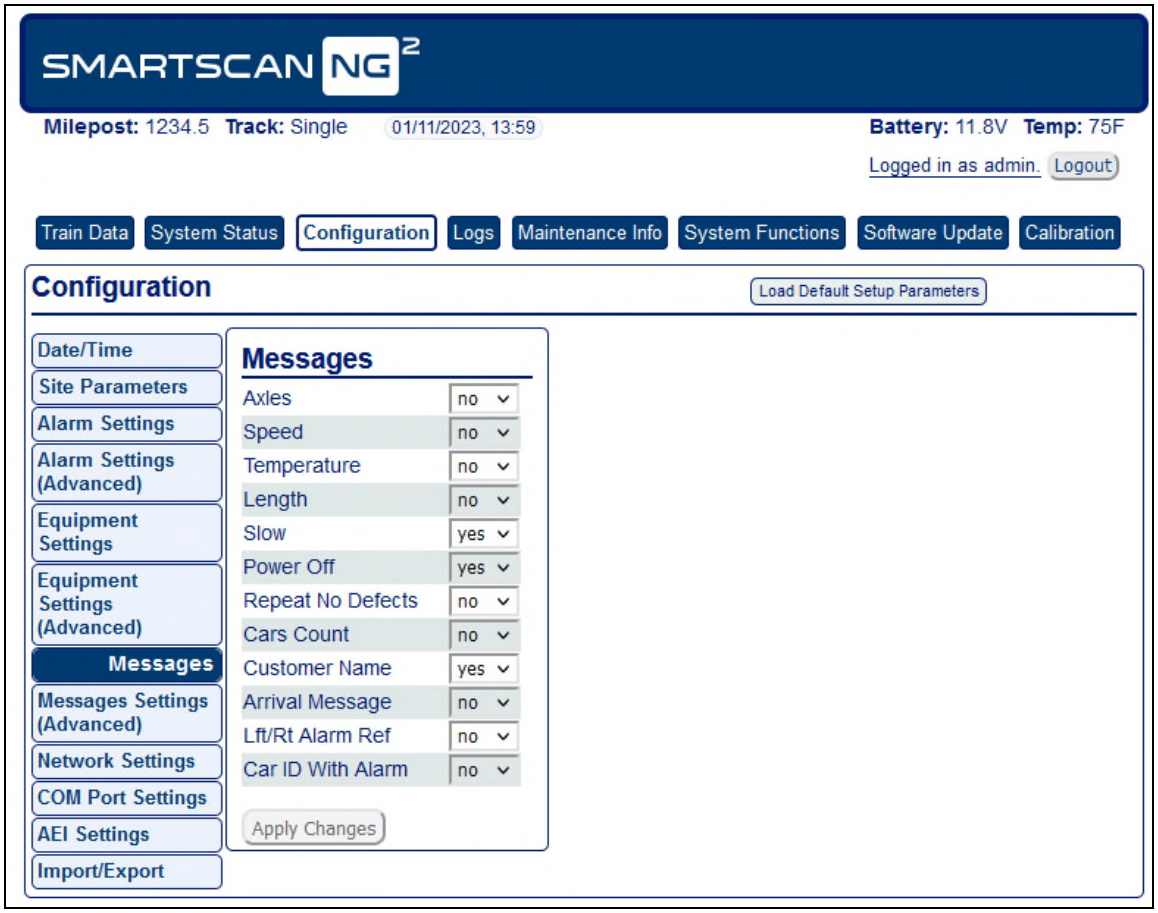

Messages Tab

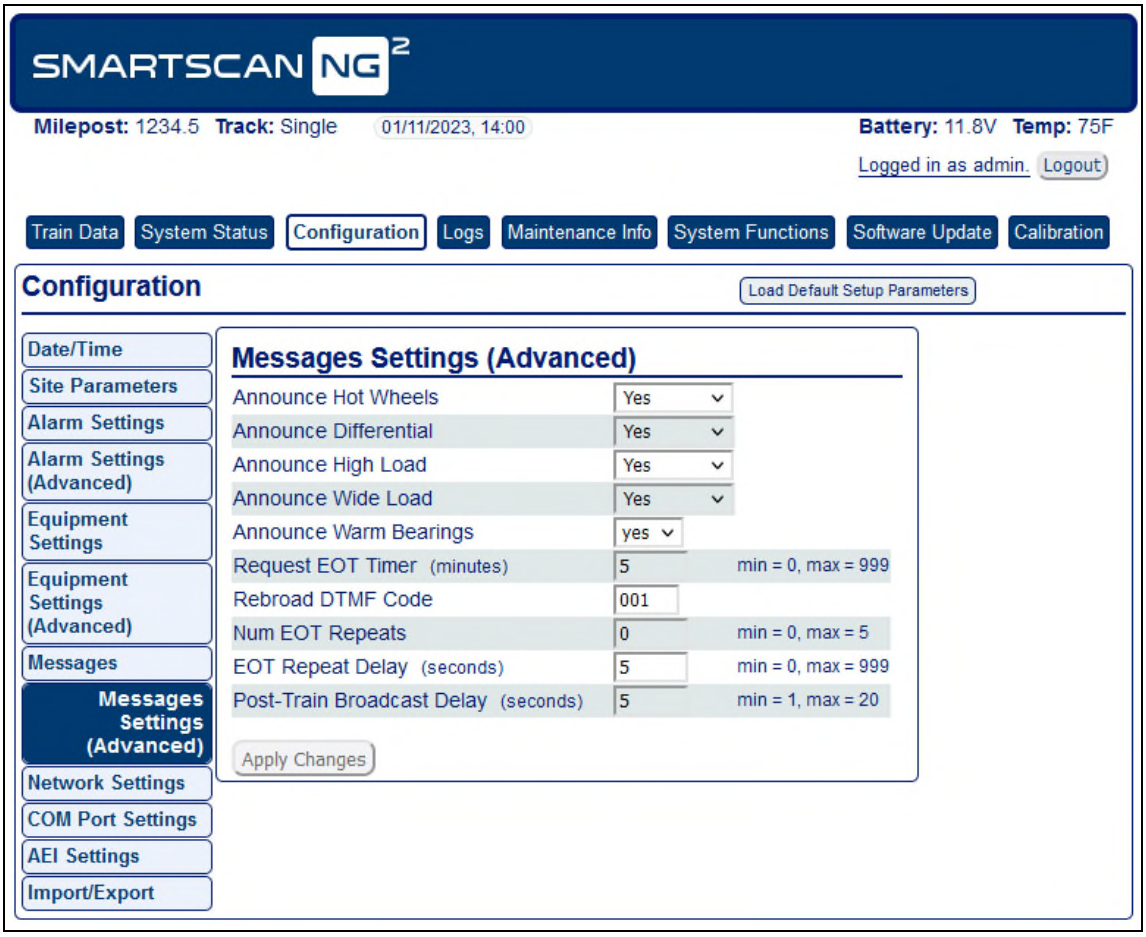

Messages Settings (Advanced) Tab

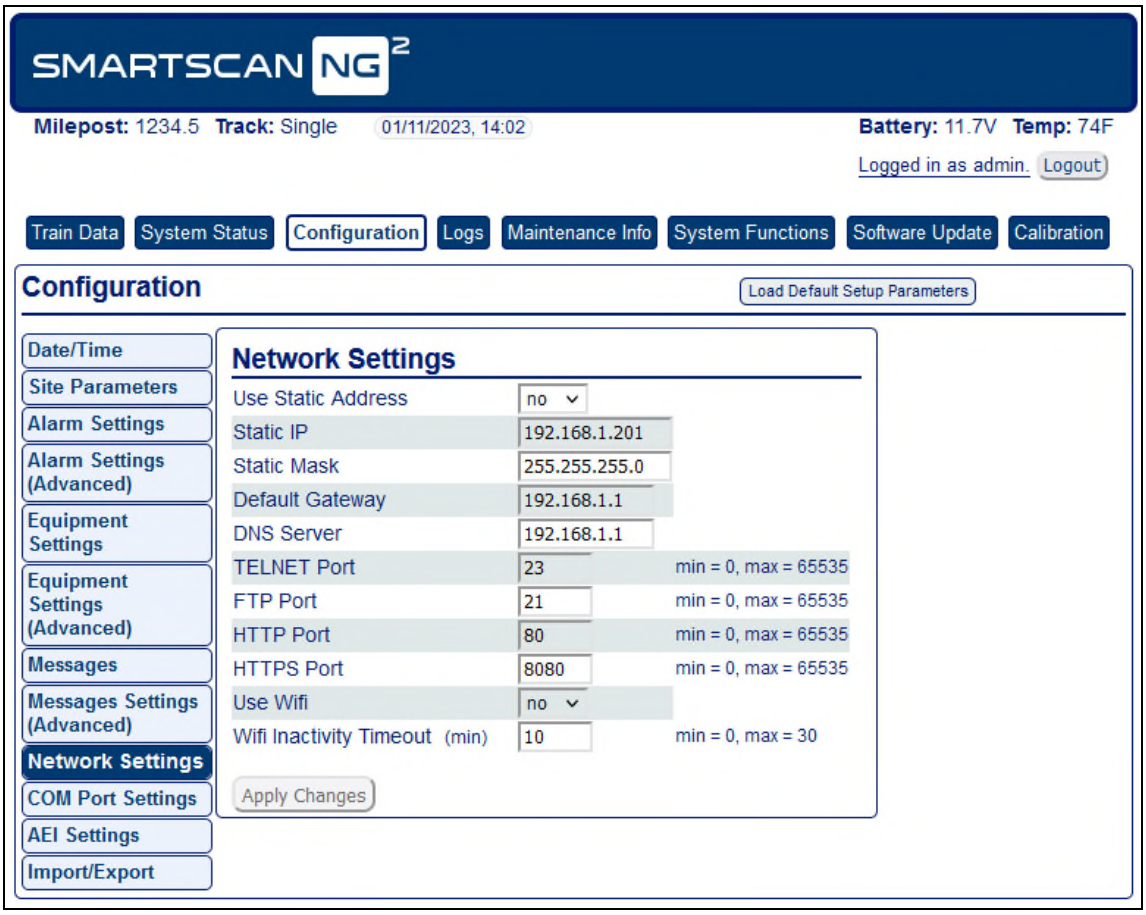
SMARTSCAN NG2
Milepost: 1234.5 Track: Single 01/11/2023, 14:02
Battery: 11.7V Temp: 74F
Logged in as admin. Logout
Train Data
System Status
Configuration
Logs
Maintenance Info
System Functions
Software Update
Calibration
Configuration
Load Default Setup Parameters
Date/Time
Site Parameters
Alarm Settings
Alarm Settings (Advanced)
Equipment Settings
Equipment Settings (Advanced)
Messages
Messages Settings (Advanced)
Network Settings
COM Port Settings
AEI Settings
Import/Export
Network Settings
Use Static Address no
Static IP 192.168.1.201
Static Mask 255.255.255.0
Default Gateway 192.168.1.1
DNS Server 192.168.1.1
TELNET Port 23 min = 0, max = 65535
FTP Port 21 min = 0, max = 65535
HTTP Port 80 min = 0, max = 65535
HTTPS Port 8080 min = 0, max = 65535
Use Wifi no
Wifi Inactivity Timeout (min) 10 min = 0, max = 30
Apply Changes

Network Tab

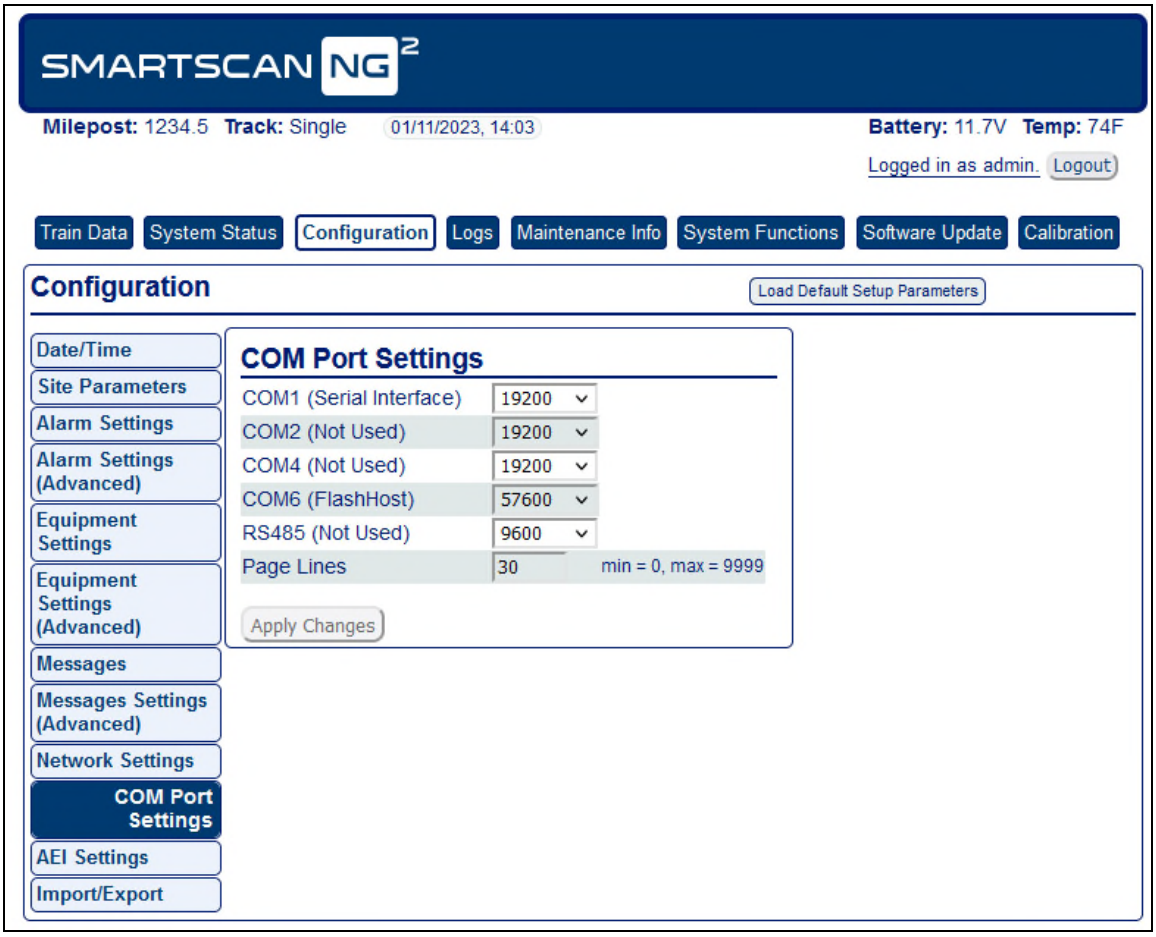

COM Port Settings

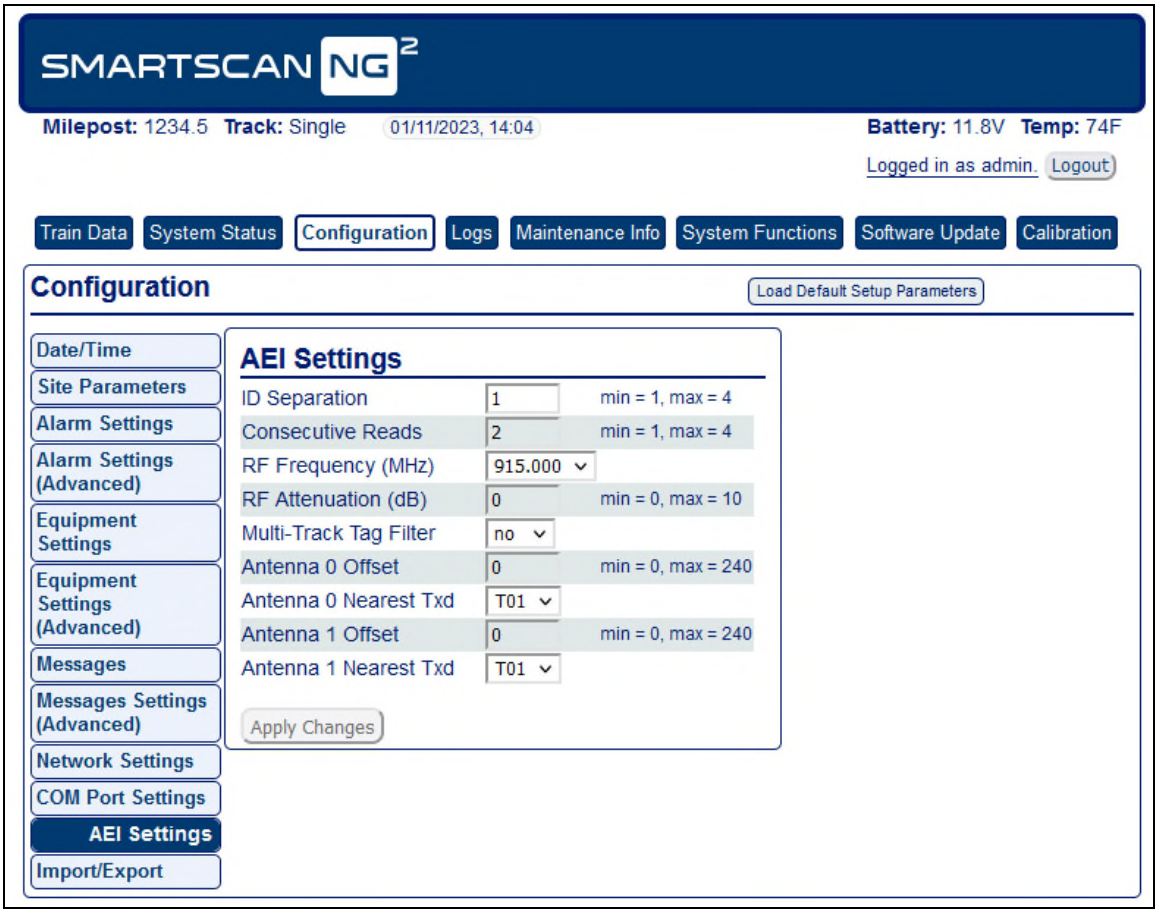

AEI Settings Tab

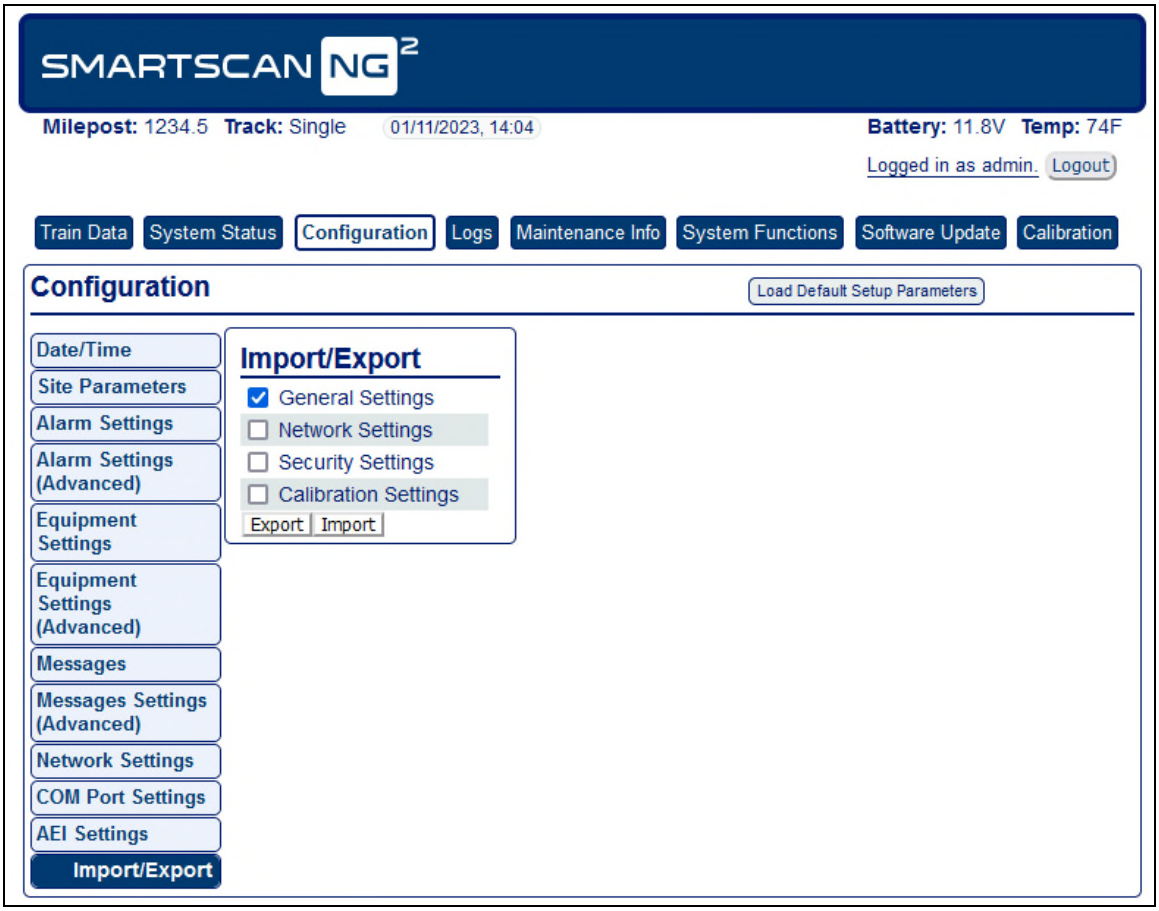

Import/Export Tab

5.4 System Event Log

The Event Log report is used for diagnostics. As certain system events occur, entries are posted into the event log. Each time an entry is made into this log, it receives an event number, the date and time that the event was recorded, and the event description.

The entries are stored in a section of SRAM that can hold up to 300 separate entries. Each time an event is recorded which exceeds this maximum, the new one overwrites the oldest recorded event. The entries are saved during a power outage but can be deleted with the Clear Event Log option on the System Functions menu. Producing the report at this time produces a "No Events" message. If events have been recorded and not cleared, they're listed in chronological order, beginning with the most recently recorded event.

To view the system event log, left-click the **Log** tab. Grab and drag the slider bar to view the full report. See the Event Log sample depicted below.

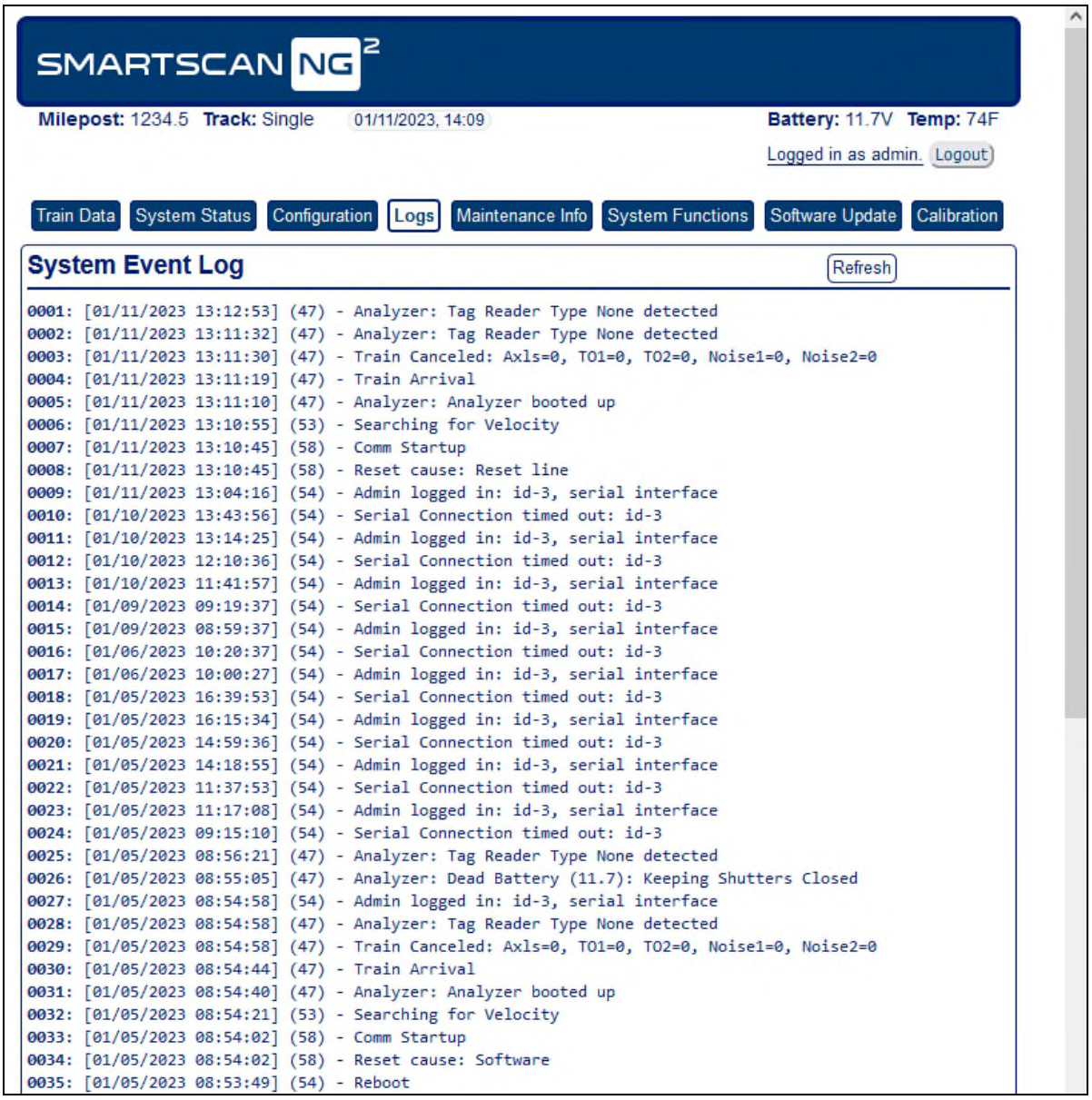

Log Tab

Each line of text (that is, each event) contains these fields.

- The sequential number assigned to the event as it was generated
- The date at which the event was recorded (date is in dd/mm/yy format)
- The time at which the event was recorded (time is in 24-hour hh:mm:ss format, where 8 a.m. is 08:00:00, noon is 12:00:00, 8 p.m. is 20:00:00, and midnight is 00:00:00)
- The event description

5.5 Maintenance Info

To view the maintenance info settings, left-click the **Maintenance Info** tab. Then left-click the category tabs to view or edit the various parameters.

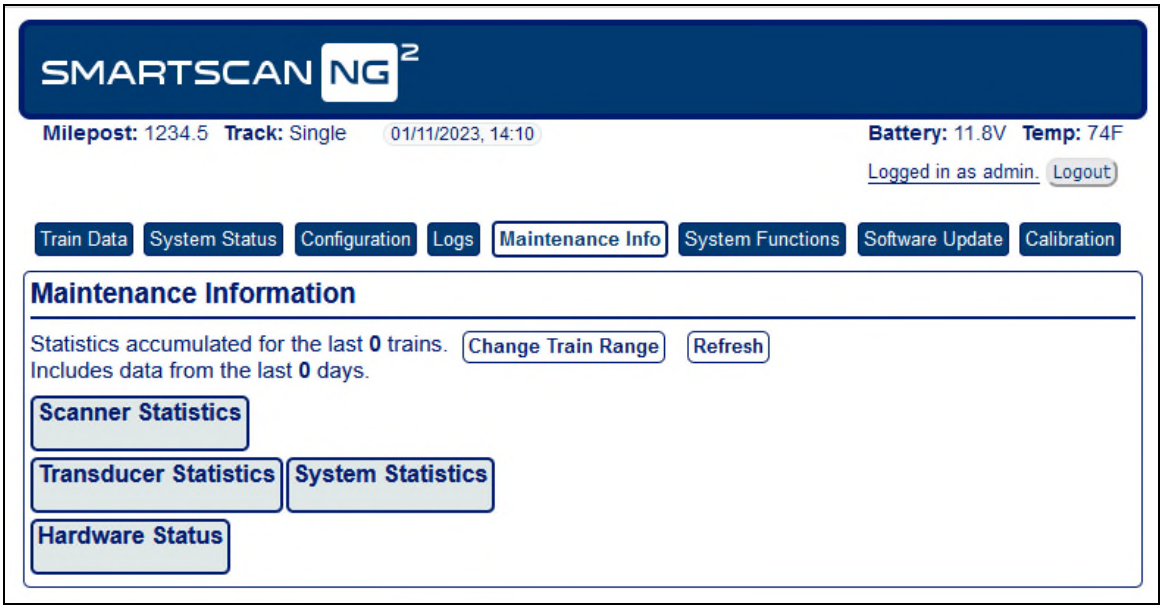

Maintenance Info Tab

5.6 System Functions

Some but not all system functions can be accessed remotely. Left-click the Systems Functions tab to view available options. Left-click the corresponding button to initiate the desired function.

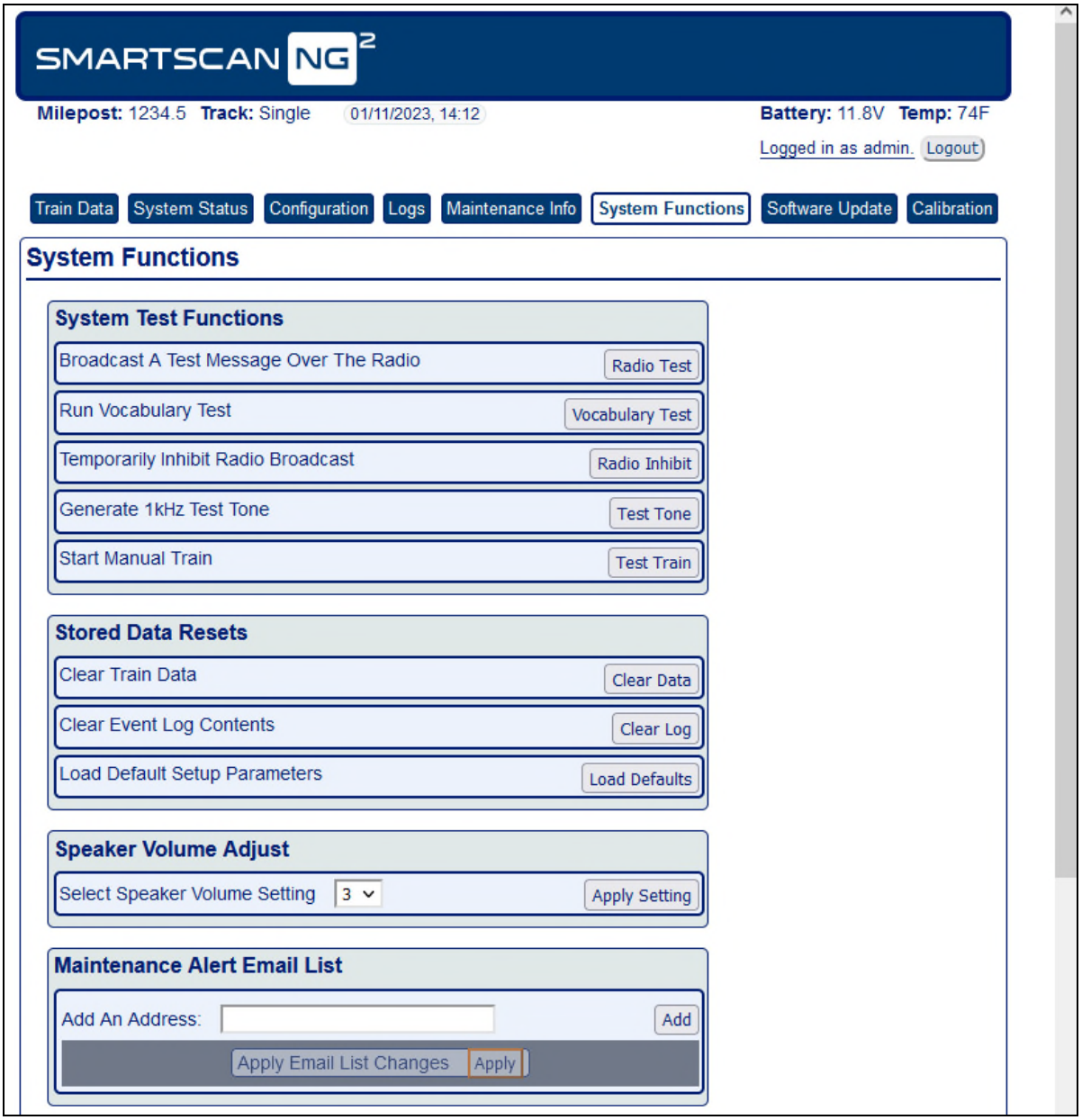

System Functions Tab

5.7 Software Update

To perform a remote software update, left-click the Software Update tab.

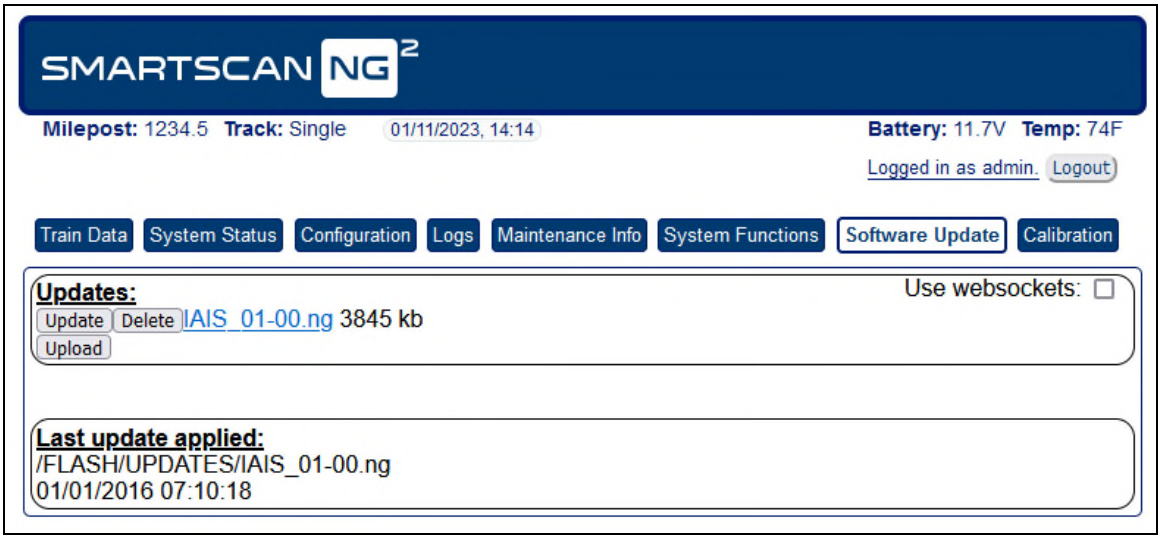

Software Update Tab

To upload a new file, left-click on the **Upload** button. Search for and select a software file on your computer. Only two files can be stored at a time. If there are already two files, you must delete one before uploading another.

When the upload is complete, left-click the **Update** button and follow the instructions in the prompts.

Updating the firmware through the Web Interface (Software Update tab) automatically deletes the train data and the Event Log before installing the update. A confirmation prompt like below warns of these pending deletions and allows canceling the update to log any needed data.

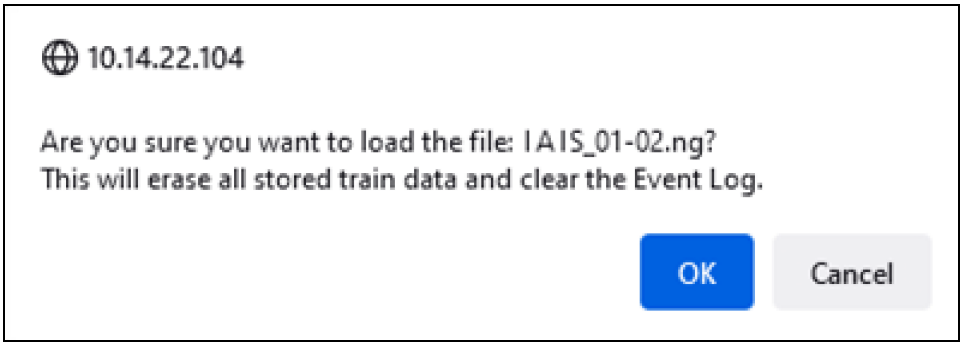

5.8 Scanner Auto Calibration

To perform a remote scanner auto-calibration, left-click the Scanner Auto Calibration tab.

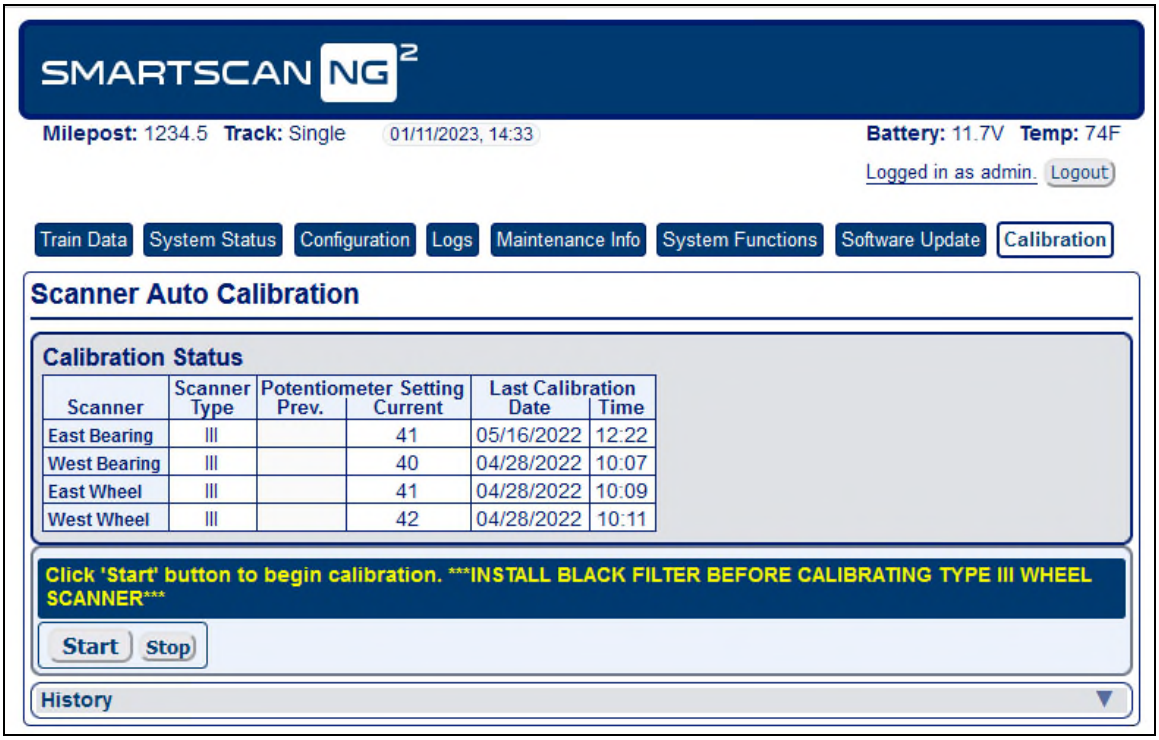

Calibration Tab

6.0 Producing Reports

The SmartScanNG² system provides:

- Train Summary report
- Train Detail report
- extended Train Detail report
- abbreviated Train Detail report
- Exception Summary report
- extended Exception Detail report
- abbreviated Exception Detail report
- Last Train report
- Train DSR report
- System Status report
- AEI Diagnostic Detail report
- Event Log report

This section shows a sample of each report with a description of each field. It also lists step-by-step instructions on producing each report, both **on-site** and **off-site**. The instructions for each report start with you being at the Main menu, which is described below.

1 If **on-site**, plug your computer into the SmartScanNG² serial port COM1.

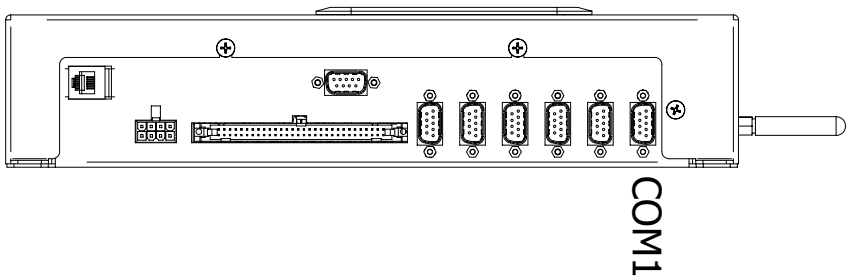

2 Turn on your computer.

3 Be sure that your computer has installed communications software, that it is set to use full-duplex, <u>and</u> that the baud rate is set to 19,200.

Use your communications software to open a LOG file and capture the whole session to the file. When your session is complete, you may then view what you have done with an editor, print it with a printer, or store it for later retrieval.

4 On your computer, open a LOG file.

5 If **off-site**, establish communications with the SmartScanNG² via Ethernet or modem as appropriate.

6 Press **[Esc]**.

This prompt appears.

```
Enter password:
```

7 Type the assigned password.

The entry of this word is **not** case-sensitive.

8 To get the serial interface to come up, press **[Esc]**.

The Main menu appears.

```
SmartSCAN NG2, MP/KP:1234.5, Track:North
11/30/2022 15:47:04, 11.8V, 73°F
Main Menu - Comm
----------------------------------------
[A] - Train Summary
[B] - Train Detail
[C] - Exception Summary
[D] - Exception Detail
[E] - System Status Report
[F] - Last Train
[G] - Train DSRs
[H] - AEI Diagnostic
[I] - Setup
[J] - Event Log
[K] - System Functions Menu
[L] - Replay Train
[M] - Security Menu
[X] – Exit
```

At the above prompt, you can produce one of the listed reports by selecting the appropriate option.

If a train is at the site when the Main menu is generated, "*** Train Is Present ***" is displayed just above the menu header for the Main menu.

9 When done, close the LOG file.

10 To exit the serial interface and return the system to normal operation, type **X**.

When a session ends, if a modem was used, the system sends various commands to the modem to prepare it for future use. If at any time during the disconnect procedure, lines such as "+++ATH0" appear on your screen, these are merely commands preparing the modem for further use. They shouldn't be construed as anything that is meant for the user.

6.1 Train Summary Report

The Train Summary report lists all trains currently stored in the Trains directory. A train number is shown for each train entry so that a Train Detail report may easily be produced for any train listed on the summary.

The report is divided into a header section and a detail section. The header section contains general information about the site. The detail section contains summary information on each train that passed the site.

The SmartScanNG² system calculates a checksum for each train. This checksum is stored with the train data. Later, when the system retrieves this data, it recalculates the checksum. If the two checksums don't match, the Train Summary report so states in the detail section. So, instead of getting a train record, you'll get a checksum-error line.

Below is a sample of part of a Train Summary report when Hotwheel alarm detection and the AEI subsystem were disabled when printing the report. (When the report is run, if the Hotwheel option on the Equipment Settings menu is disabled, the hotwheel information is hidden. When the report is run, if the AEI option is disabled, the tag information is hidden.) The contents of your report will be different. The version information in the sample below is for illustrative purposes only. It doesn't represent any real release of the firmware.

```
                        Southern Technologies Corporation
                         Next Generation Detector System
                                   TRAIN SUMMARY
==============================================================================================
Software Version: IAIS_01-00 2022-10-24                           MP/KP: 1234.5
                                                                 Track: North
Current Alarm Settings
Absolute...... 150   Carside Slope... 1.31

Warm.......... 170   Carside Min..... 155
Differential.. 115   Cold Rail Temp..  10
Hot Wheel..... 702

Total Trains: 18
-------------------------------------------------------------------------------
                                          D                Bearing     Bearing
                                   TxD Counts i    Speed      Average     Maximum    Amb
Train#   Date   Time Cars Axles  TO1  TO2  r Min Max Xit  East  West  East  West Temp  Bat
-----------------------------------------------------------------------------------------------
  18B  12/11/22 04:13  68   276  276  276  N  24  33  32    15    13    29    30  +27F 13.1v
  17B  12/11/22 03:51  52   332  332  332  N  23  36  36    15    14    35    39  +27F 13.0v
  16B  12/11/22 03:14 131   530  530  530  N   9  29  29    8     5     27    20  +27F 13.0v
  15B  12/11/22 01:26  49   318  318  318  S   7  11   8    17    16    34    31  +27F 13.1v
  14B  12/11/22 00:49  75   304  304  304  S   5  14   9    19    17    36    34  +26F 13.0v
  13B  12/11/22 00:08  85   346  346  346  N  21  32  32    17    16    40    30  +27F 12.9v

  12B  12/10/22 23:08  84   342  342  342  N   7  27  27    7     5     23    19  +27F 13.0v
  11B  12/10/22 22:38  98   398  398  398  N   8  28  27    6     3     29    19  +27F 13.1v
  10B  12/10/22 20:59  92   372  372  372  S  19  24  22    8     5     26    28  +26F 13.1v
                        •
                        •
                        •

END OF REPORT - Press any key...
```

Below is a sample of part of a Train Summary report when the Hotwheel option on the Equipment Settings menu is enabled. The contents of your report will be different.

```
                        •
                        •

  Current Alarm Settings
  Absolute...... 150   Carside Slope... 1.31

  Warm.......... 170   Carside Min..... 155
  Differential.. 115   Cold Rail Temp..  10
  Hot Wheel..... 702
  Total Trains: 20
  ------------------------------------------------------------------------------

                                            D                Bearing      Wheel
                                   TxD Counts i    Speed      Average     Maximum    Amb
  Train#   Date   Time Cars Axles  TO1  TO2  r Min Max Xit  East  West  East  West Temp  Bat
-------------------------------------------------------------------------------------------

                        •
                        •
                        •

  END OF REPORT - Press any key...
```

The Train Summary and Exception Summary reports contain three unlabeled columns of one-character status codes. These characters immediately precede and immediately follow the train number and reflect a train's DSR, Alarm, and Correction Factor status. A legend listing the available characters and their meanings follows these reports. The screenshot below shows this legend. If the user presses the ESC key to abort a Train Summary or Exception Summary report, the legend does not appear.

```
=============================================================================================
                        Southern Technologies Corporation
                         Next Generation Detector System
                                   TRAIN SUMMARY
=============================================================================================
                      •
                      •
                      •
-------------------------------------------------------
                                          D
                                   TxD Counts i    Speed
Train#   Date   Time Cars Axles  TO1  TO2  r Min Max Xit
-------------------------------------------------------
+  6A  12/03/22 14:56   4    18   18   18  W  30  30  30…
W  5S  12/03/22 14:55   4    18   18   18  W  30  30  30…
B  4A  12/03/22 14:54   4    18   18   18  W  30  30  30…
   3S  12/03/22 14:53   4    18   18   18  W  30  30  30…
   2T  12/03/22 08:43  41   166  166  166  E  30  30  30…
   1T  12/03/22 08:06  41   166  166  166  E  30  30  30…
=============================================================================================
Status Code Legend: [DSR Status][Train #][Alarm Status][Correction Factor]

DSR Status        : 'B' = Bearing, 'W' = Wheel, '+' = Both Bearing and Wheel
Alarm Status      : 'A' = Alarms only, 'B' = Both Alarms and Integrity Failures
                  : 'I' = Integrity Failures only, 'S' = System Alarms only, 'T' = Test Train
Correction Factor : 'C' = One or more correction factors greater than 25%.
                  : '*' = Resistor Test results overridden for one or more scanners.
=============================================================================================
```

The table below lists the fields from the header section and the contents of each field.

Heading	Contents of Field
Version Info	The version numbers of the firmware and their release dates, which are in mm/dd/yy format. This firmware resides on the processor modules.
MP/KP	The five-digit milepost/kilometer post of the site. ***Section 4.0 - Serial Interface*** tells how to change this value using the MP/KP submenu.
Track	The track designator of the site. For single-track sites, the value is Single. For double-track sites, valid values are North, South, East, West, Main 1, Main 2, Main 3, and Middle. ***Section 4.0 - Serial Interface*** tells how to set this value using the Track Number submenu of the Setup menu.
Alarm Limits	The alarm parameters currently defined in the system setup. These values were in place at the time this report was run. • The value after Absolute is set by the Absolute option on the Alarm Settings menu. • The value after Warm is set by the Warm option on the Alarm settings menu. • The value after Differential is set by the Differential option on the Alarm Settings menu. • The value after Hot Wheel is set by the Hotwheel option on the Alarm Settings menu. • The value after Carside Slope is set by the Carside Slope option on the Alarm Settings (Advanced) menu. • The value after Carside Min is set by the Carside Minimum option on the Alarm Settings (Advanced) menu. • The value after Cold Rail Temp is set by the Cold Rail Temp option on the Alarm Settings menu. **Section 4.0 - Serial Interface** tells how to set these values.
Total Trains	The total number of trains visiting the site since the Trains directory was last cleared.

The table below lists the fields from the detail section and the contents of each field.

Heading	Contents of Field
Train#	The number that identifies the train in the Trains directory.
	There is one column in front of the Train# column and two between it and Date. The source information for these columns is included in a legend at the end of the Train Summary report. The legend lists these character columns and what each column can contain.)
Date	The date the train arrived at the site. Date is in mm/dd/yy format. ***Section 4.0 - Serial Interface*** tells how to change this value.
Time	The time the train arrived at the site. Time is in 24-hour hh:mm format, where 8 a.m. is 08:00, noon is 12:00, 8 p.m. is 20:00, and midnight is 00:00. ***Section 4.0 - Serial Interface*** tells how to change this value using the Date and Time submenu of the Setup menu.
Cars	The total number of cars counted by the SmartScanNG² system.
Axles	The total number of axles counted by the SmartScanNG² system.
TO1	The total number of hits counted by gating transducer TO1. TO1 is the first gating transducer going north or east from the bearing scanner. It is the gating transducer closest to the bearing scanner.
TO2	The total number of hits counted by gating transducer TO2. TO2 is the second gating transducer going north or east from the bearing scanner. It is the gating transducer farthest from the bearing scanner.
AEI Tags	The total number of AEI tags stored. The number of tag pairs found plus those single tags that lack a match. This heading appears only when the AEI subsystem is enabled using the AEI option on the Equipment Settings menu. If a train did not have the AEI option enabled during passage, this field contains "---" instead of a tag count.
Speed (mph)	The train's exit speed in miles per hour.
Dir	The direction the train was traveling. Valid values are N, S, E, and W.
Bearing Average	Under this heading are two columns, one for each bearing scanner, containing the maximum temperature read by the bearing scanners. If the track orientation is east and west, the bearing scanners are labeled north and south. If the track orientation is north and south, they are labeled east and west. This field appears only when the Hotwheel option on the Equipment Settings menu is disabled. If a train did not have the Hot Bearing option enabled during passage, this field contains "---" instead of a heat value.
Wheel Maximum	Under this heading are two columns, one for each wheel scanner, containing the maximum temperature read by the wheel scanners. If the track orientation is east and west, the wheel scanners are labeled north and south. If the track orientation is north and south, they are labeled east and west. This field appears only when the Hotwheel option on the Equipment Settings menu is enabled. If a train did not have the Hotwheel option enabled during passage, this field contains "---" instead of a heat value.
Amb Temp	The ambient temperature, in degrees Fahrenheit, at the time the train arrived at the site.
Bat	The system battery voltage at the time the train passed the site.

To produce a Train Summary report:

1. Using the serial interface, display the Main menu.

   Section 4.0 - Serial Interface tells how to display the Main menu. The Main menu looks like this.

```
SmartSCAN NG2
12/11/2022 09:12:21 EST
Main Menu - Comm
----------------------------
[A] - Train Summary
[B] - Train Detail
[C] - Exception Summary
[D] - Exception Detail
[E] - System Status Report
            .
            .
            .
```

2. Select **Train Summary**.
3. To exit the serial interface and return the SmartScanNG² system to normal operation, type **X**.

6.2 Train Detail Report

The Train Detail report provides detailed information on a single train. When choosing this report, you'll be prompted for a train number. When prompted, enter a train number from the Train Summary report. The train number appears under the column titled "Train#" in the detail section of the Train Summary report.

Carside Slope alarm detection is enabled/disabled using the Carside Slope option on the Equipment Settings menu. Hotwheel alarm reporting is enabled/disabled using the Hotwheel option on the Equipment Settings menu. The AEI subsystem is enabled/disabled using the AEI option on the Equipment Settings menu.

Where wheel scanners are properly installed, wheel temperatures are always recorded, even if the Hotwheel option is disabled. On the other hand, if the AEI option is disabled during train passage, no AEI information is recorded. If the Carside Slope option is disabled during train passage, no Carside Slope alarms are generated. But, if it is enabled at the time a report is requested, a carside-slope alarm-limit line is generated for each car of the train.

Below is a sample of part of a Train Detail report when both the AEI option and the Hotwheel option on the Equipment Settings menu were enabled while the specified train was passing the site. The Carside Slope option on the Equipment Settings menu was disabled. The contents of your report will be different. The version information in the sample below is for illustrative purposes only. It doesn't represent any real release of the firmware.

```
==============================================================================
                        Southern Technologies Corporation
                         Next Generation Detector System
                                  TRAIN DETAIL
==============================================================================
Train#: 248                Axles: 344         Speed               MP/KP: 1234.5
  Date: 12/05/22            Cars: 85          Min: 24             Track: North
  Time: 07:45          Direction: North       Max: 34       Temperature:  +23F
                   Shutters Open: 138         Avg: 27           Battery: 13.1v
                          Length: 5128       Exit: 33
==============================================================================
                   Resistor        Txdr
Scanner    Max Avg Read Req  CF    Counts     Alarm        Limit  Carside Parms
--------------------------------   -------    ------------------  -------------
East  Brng  31  14  173 127B   0   TO1 344    Absolute       200  Slope:   1.60
West  Brng  29   9  184 141B   0   TO2 344    Warm           170  Minimum:  300
East  Whl   50   0   28   0B   0              Differential   115
West  Whl   41   0   33   0B   0              Hot Wheel       652
Resistor Test Mode: Disabled
..............................................................................
Dragging Equip Detection: Enabled
High Load Detection:      Enabled  - Announce eastbound only
Wide Load Detection:      Enabled  - Announcement disabled
Announce Warm Bearings:   Enabled
==============================================================================
Software Version: IAIS_01-00 2022-10-24
==============================================================================
AEI System Data

Tags Read          Tags Stored: 169
--------------
Antenna 0: 85
Antenna 1: 84

------------------------------------------------------------------------------
System Alarms

 None

------------------------------------------------------------------------------
Integrity Failures

 None

------------------------------------------------------------------------------
Axle Alarm Summary

 NONE

------------------------------------------------------------------------------
                              .
                              .
                              .
(continued on next page)
```

Train Detail - Extended

Train Detail - Extended (continued)

```
                                  •
                                  •
                                  •
-------------------------------------------------------------------------------
Announcements Made

" Iowa Interstate detector milepost 1 2 3 4 point 5 no defects "

" detector out "

-------------------------------------------------------------------------------
              Rail       Wheel
 Car Axle East  West  East  West    ON  OFF PW1 PW2  Alarms
-------------------------------------------------------------------------------
   1    1    2     1     0     0    56    0  23  22  XRR    281
        2    5     1     0     0    56  130  21  20
        3    0     1     0     0    56  131  22  21
        4    6     9     0     0    56  882  23  22
        5    0    10     0     0    56  130  22  21
        6    0     0     0     0    56  130  22  21

   2    7    3     6     0     0    56  339  23  22  XRR    248
        8    1     0     0     0    56  130  24  24
        9    1     1     0     0    56  130  20  20
       10    0     6     0     0    56  880  22  21
       11    0     3     0     0    56  129  21  21
       12    0     3     0     0    56  130  22  22

   3   13   18    11     0     0    56  250  21  20  MP   718090
       14    9     7     0     0    56  109  21  20
       15   10     5     0     0    56 1049  21  21
       16   20    19     0     0    56  109  21  20

   4   17    3     2     1     0    56  160  21  20  MP   718298
       18    3     0     0     0    56  110  22  22
       19    2    11     0     0    56 1047  22  22
       20   18     1     5     0    56  109  21  21

   5   21   16    13     0     0    56  163  20  19  TILX 191942
       22   22    16     0     0    56  109  19  18
       23    9     2     0     0    56 1077  22  21
       24    5     5     0     0    56  109  22  21

   6   25   24    16     0     0    56  165  20  20  CTCX 733058
       26   27    11     0     0    56  109  20  19
       27   11    10     0     0    56 1078  22  21
       28   22    16     0     0    56  109  21  21
                                  •
                                  •
                                  •
```

The Train Detail report is divided into three sections. The header section contains general information about the site (like the MP/KP) and some detail information about the specific train (like the train's exit speed) that passed the site. The detail section contains more detailed information (like the car number) about the specific train. In between these two sections is the system-events section, which contains all System Alarms and Exception Alarms associated with the train.

The table below lists the fields from the header section and the contents of each field.

Heading	Contents of Field
Train#	The number that identifies the train in the Trains directory.
Date	The date the train arrived at the site. Date is in mm/dd/yy format. ***Section 4.0 - Serial Interface*** tells how to change this value using the Date and Time submenu of the Setup menu.
Time	The time the train arrived at the site. Time is in 24-hour hh:mm format, where 8 a.m. is 08:00, noon is 12:00, 8 p.m. is 20:00, and midnight is 00:00. ***Section 4.0 - Serial Interface*** tells how to change this value using the Date and Time submenu of the Setup menu.
Length	The length of the train in feet.
Speed	The train's minimum, maximum, average, and exit speeds in miles per hour.
Axles	The total number of axles counted by the SmartScanNG² system.
Cars	The total number of cars counted by the SmartScanNG² system.
Direction	The direction the train was traveling. Valid values are North, South, East, and West.
Shutters Open	The number of seconds it took the train to pass over the site.
MP/KP	The five-digit milepost/kilometer post of the site. ***Section 4.0 - Serial Interface*** tells how to change this value using the MP/KP submenu of the Setup menu.
Track	The track designator of the site. For single-track sites, the value is Single. For double-track sites, valid values are North, South, East, West, Main 1, Main 2, Main 3, and Middle. ***Section 4.0- Serial Interface*** tells how to set this value using the Track Number submenu of the Setup menu.
Temperature	The ambient temperature at the time the train arrived at the site. Temperature is in degrees Fahrenheit.
Battery	The system battery voltage at the time the train passed the site.
Brng	Location of the bearing scanners. If the track orientation is east and west, the bearing scanners are labeled north and south. If the track orientation is north and south, they are labeled east and west
Max	The maximum temperature, above the ambient temperature in degrees Fahrenheit, recorded by the bearing scanner on a given railside. For example, if the ambient temperature (at the time the train arrived at the site) is 77°F (25°C), and the value in this field is 112, the maximum temperature would be 189°F (87.2°C). If the train did not have the Hot Bearing option enabled during passage, this field contains "---" instead of a heat value.
Avg	The average temperature, above the ambient temperature in degrees Fahrenheit, calculated from all recorded temperatures from the bearing scanner on a given railside. For example, if the ambient temperature (at the time the train arrived at the site) is 86°F (30°C), and the value in this field is 55, the average temperature would be 141°F (60.6°C). If the train did not have the Hot Bearing option enabled during passage, this field contains "---" instead of a heat value.

Heading	Contents of Field
Resistor Read	The scanner resistor temperature (read after train passage), in degrees Fahrenheit, recorded by the bearing scanner on a given railside. If the train did not have the Hot Bearing option enabled during passage, this field contains "---" instead of a heat value.
Resistor Req	The resistor temperature, in degrees Fahrenheit, required by the bearing scanner on a given railside to avoid a Cold Resistor alarm. This value was calculated using the amount of time the shutters were open and the Resistor Test Mode option in effect at the time the train exits the site. If the Resistor Test Mode option is disabled, a zero appears in this field. If the train did not have the Hot Bearing option enabled during passage, this field contains "---" instead of a heat value.
	One of five uppercase letters follows the Resistor Req temperature. **B** The baseline resistor integrity test method was used for this train. **D** The resistor integrity test (that is, the Resistor Test Mode option) was disabled by the user. **I** The interim resistor integrity test method was used for this train. **T** For this train, the shutters were open for less than 30 seconds. **V** For this train, the battery voltage (measured with the shutters open) was less than 12.5 volts. For **D**, **T**, and **V**, the required resistor heat is set to zero (that is, a zero appears in the Resistor Read field). A **T** or **V** indicates that the integrity test was not performed due to low voltage or insufficient shutter open time, which could result in an invalid resistor integrity test if it was performed. If the train did not have the Hot Bearing option enabled during passage, this field contains "-" instead of a heat value.
CF	The percentage difference between the required resistor value and the value that was actually read. For example, if the required resistor temperature is 180° and the actual resistor temperature is 135°, the correction factor would be 25% (1 - (135 / 180) = .25), and 25 would appear in this field. If the train did not have the Hot Bearing option enabled during passage, this field contains "---" instead of a heat value.
Txdr Counts	The gating transducer designator (either TO1 or TO2) followed by the total number of hits on that transducer.
Alarm Limit	The alarm parameters currently defined in the system setup. These values were in place at the time the train arrived at the site. • The value after Absolute is set by the Absolute option on the Alarm Settings menu. • The value after Warm is set by the Warm option on the Alarm settings menu. • The value after Differential is set by the Differential option on the Alarm Settings menu. • The value after Hot Wheel is set by the Hotwheel option on the Alarm Settings menu. ***Section 4.0 - Serial Interface*** tells how to set these values.

Heading	Contents of Field
Carside Parms	The Carside Slope alarm parameter values that were in place at the time the train arrived at the site. • The value after Slope is set by the Carside Slope option on the Alarm Settings (Advanced) menu. • The value after Minimum is set by the Carside Minimum option on the Alarm Settings (Advanced) menu. ***Section 4.0 - Serial Interface*** tells how to set these values.
Resistor Test Mode	The status of the post-train resistor integrity test at the time the train arrived at the site. Valid values (aka modes) are Enabled, Reduced, and Disabled. ***Section 4.0 - Serial Interface*** tells how to set this value using the Resistor Test Mode option on the Equipment Settings menu.
Wheel	The location of the wheel scanners. If the track orientation is east and west, the wheel scanners are labeled north and south. If the track orientation is north and south, they are labeled east and west.
Max	The maximum temperature, above the ambient temperature in degrees Fahrenheit, recorded by the wheel scanner on a given railside. If the train did not have the Hotwheel option enabled during passage, this field contains "---" instead of a heat value.
Avg	The average temperature, above the ambient temperature in degrees Fahrenheit, calculated from all recorded temperatures from the wheel scanner on a given railside. If the train did not have the Hotwheel option enabled during passage, this field contains "---" instead of a heat value.
Resistor Read	The scanner resistor temperature (read after train passage), in degrees Fahrenheit, recorded by the wheel scanner on a given railside. If the train did not have the Hotwheel option enabled during passage, this field contains "---" instead of a heat value.
Resistor Req	The resistor temperature, in degrees Fahrenheit, required by the wheel scanner on a given railside to avoid a Cold Wheel Scanner Resistor alarm. This value was calculated using the amount of time the shutters were open and the Resistor Test Mode option in effect at the time the train exits the site. If the Resistor Test Mode option is <u>disabled</u>, a zero appears in this field.. If the train did not have the Hotwheel option enabled during passage, this field contains "---" instead of a heat value.

Heading	Contents of Field
	One of five uppercase letters follows the Resistor Req temperature. **B** The baseline resistor integrity test method was used for this train. **D** The resistor integrity test (that is, the Resistor Test Mode option) was disabled by the user. **I** The interim resistor integrity test method was used for this train. **T** For this train, the shutters were open for less than 30 seconds. **V** For this train, the battery voltage (measured with the shutters open) was less than 12.5 volts. For **D**, **T**, and **V**, the required resistor heat is set to zero (that is, a zero appears in the Resistor Read field). A **T** or **V** indicates that the integrity test was not performed due to low voltage or insufficient shutter open time, which could result in an invalid resistor integrity test if it was performed. If the train did not have the Hotwheel option enabled during passage, this field contains "-" instead of a heat value.
CF	The percentage difference between the required resistor value and the value that was actually read. For example, if the required resistor temperature is 180° and the actual resistor temperature is 135°, the correction factor would be 25% (1 - (135 / 180) = .25), and 25 would appear in this field. If the train did not have the Hotwheel option enabled during passage, this field contains "---" instead of a heat value.
AEI System Data	The number of AEI tags read (by antenna0 and antenna1) and the total number of tags stored for the train. Where both tags of a tag pair are operational, each antenna will read one tag of the pair. The total number of tags stored represents the number of tag pairs found plus those single tags that lack a match. This heading and the columns under it appear only when the AEI subsystem was enabled while the train was passing the site.
Firmware Versions	The version numbers of the firmware and their release dates, which are in mm/dd/yy format. This firmware resides on the processor modules.

The table below lists the fields from the system-events section and the contents of each field.

Heading	Contents of Field
System Alarms	Lists any System Alarms and Integrity Failures detected at the time the train passed the site. If none were detected, this header is followed by the word "none." ***Appendix A - System Alarms*** describes the conditions and events that the system flags as System Alarms. ***Appendix B - Integrity Failures*** describes the conditions and events that the system flags as Integrity Failures.
Axle Alarm Summary	Lists each Exception Alarm found on the train and the axle on which it was found. If none were found, this header is followed by the word "none."

The table below lists the fields from the detail section and the contents of each field.

Heading	Contents of Field
Car	The car number as determined by the firmware.
Axle	The axle number.
Rail	Under this heading are two columns, one for each bearing scanner, containing the temperature read by the bearing scanners. If the track orientation is east and west, the bearing scanners are labeled north and south. If the track orientation is north and south, they are labeled east and west. This heading and the two columns under it appear only when the Hot Bearing option was enabled while the train passed the site.
Wheel	Under this heading are two columns, one for each wheel scanner, containing the temperature read by the wheel scanners. If the track orientation is east and west, the wheel scanners are labeled north and south. If the track orientation is north and south, they are labeled east and west. This heading and the two columns under it appear only when the Hotwheel option was enabled while the train passed the site.
ON	The number of milliseconds a bearing was scanned.
OFF	The number of milliseconds between axles (when no axle was between the gating transducers).
PW1	The recorded width of the pulse generated by gating transducer TO1. There is no fixed value for the pulse widths. Slower trains generate wider pulse widths (that is, they generate larger values) than faster-moving trains.
PW2	The recorded width of the pulse generated by gating transducer TO2. There is no fixed value for the pulse widths. Slower trains generate wider pulse widths (that is, they generate larger values) than faster-moving trains.
Alarms	Any Exception Alarm found on the given axle.

To produce an extended Train Detail report:

1. Using the serial interface, display the Main menu.

   Section 4.0 - Serial Interface tells how to display the Main menu. The Main menu looks like this.

```
SmartSCAN NG2
12/11/2022 09:12:21 EST
Main Menu - Comm
----------------------------
[A] - Train Summary
[B] - Train Detail
[C] - Exception Summary
[D] - Exception Detail
[E] - System Status Report
            •
            •
            •
```

2. Select **Train Detail**.

   This prompt appears.

```
Enter Train Number:
```

3. Type the train number.
4. If you typed less than four digits, press **[Enter]**.

   This prompt appears.

```
Abbreviated? (y/n)
```

5. Type **N** to produce an extended Train Detail report.
6. To exit the serial interface and return the SmartScanNG² system to normal operation, type **X**.

6.3 Train Detail Report (Abbreviated)

The abbreviated Train Detail report is like the extended Train Detail report. However, the abbreviated report doesn't display all the recorded axle data. It only displays axle data for:

- The car immediately preceding a car with an alarmed axle.
- The car containing the alarmed axle.
- The car immediately following the car with the alarmed axle.

Like the extended Train Detail report, the abbreviated Train Detail report is divided into three sections. The header section contains general information about the site (like the MP/KP) and some detail information about the specific train (like the train's exit speed) that passed the site. The detail section contains more detailed information (like the car number) about the specific train. In between these two sections is the system events section, which contains all System Alarms and Exception Alarms associated with the train.

```
                        Southern Technologies Corporation
                         Next Generation Detector System
                                   TRAIN DETAIL
                                    ABBREVIATED
================================================================================
Train#:  18                Axles: 276         Speed               MP/KP: 1234.5
  Date: 12/11/22            Cars: 68          Min: 24             Track: North
  Time: 04:13          Direction: North       Max: 33       Temperature:  +27F
                   Shutters Open: 112         Avg: 26           Battery: 13.1v
                          Length: 4069       Exit: 32
================================================================================
                    Resistor        Txdr
Scanner    Max Avg Read Req  CF    Counts     Alarm        Limit  Carside Parms
--------------------------------   -------    ------------------  -------------
East  Brng  29  15  300 288B   0   TO1 276    Absolute       150  Slope:   1.31
West  Brng  30  13  278 256B   0   TO2 276    Warm           255  Minimum:   90
East  Whl  --- ---  --- ---- ---              Differential   115
West  Whl  --- ---  --- ---- ---              Hot Wheel      702
Resistor Test Mode: Disabled
.............................................................................
Dragging Equip Detection: Enabled
High Load Detection:      Enabled  - Announce eastbound only
Wide Load Detection:      Enabled  - Announcement disabled
Announce Warm Bearings:   Enabled
================================================================================
Software Version: IAIS_01-00 2022-10-24
--------------------------------------------------------------------------------
System Alarms

 None

--------------------------------------------------------------------------------
Integrity Failures
 Stuck Dragger During Train Passage

--------------------------------------------------------------------------------
Axle Alarm Summary

Axle   1 Dragging Equipment
              •
              •
              •
Announcements Made

" Iowa Interstate milepost 1 2 3 4 point 5 north track you have a defect"

" Iowa Interstate milepost 1 2 3 4 point 5 north track dragging equipment near axle 1 not
working"
" Iowa Interstate milepost 1 2 3 4 point 5 north track dragging equipment near axle 1 not
working detector out "

-------------------------------------------------------------------------------
             Rail
 Car Axle East  West    ON  OFF PW1 PW2  Alarms
-------------------------------------------------------------------------------
   1    1    0     0    55    0  21  20  Dragging Equipment
        2    0     0    55  128  21  20
        3    5     2    55  127  18  18
        4    3     3    55  902  20  19
        5    3     2    55  128  20  19
        6    0     0    55  127  18  17

   2    7    9    10    55  334  21  21
        8    6     3    55  128  21  21
        9    5    10    55  128  21  20
       10    1     9    55  944  21  20
       11    6     9    55  128  21  21
       12    5    14    55  128  21  20
```

Train Detail - Abbreviated

To produce an abbreviated Train Detail report:

1. Using the serial interface, display the Main menu.

   Section 4.0 - Serial Interface tells how to display the Main menu. The Main menu looks like this.

```
SmartSCAN NG2
12/11/2022 09:12:21 EST
Main Menu - Comm
----------------------------
[A] - Train Summary
[B] - Train Detail
[C] - Exception Summary
[D] - Exception Detail
[E] - System Status Report
            .
            .
            .
```

2. Select **Train Detail**.

   This prompt appears.

```
Enter Train Number:
```

3. Type the train number.
4. If you typed less than four digits, press **[Enter]**.

   This prompt appears.

```
Abbreviated? (y/n)
```

5. Type **Y** to produce an abbreviated Train Detail report.
6. To exit the serial interface and return the SmartScanNG² system to normal operation, type **X**.

6.4 Exception Summary Report

The Exception Summary report lists all trains currently stored in the Exceptions directory. (A train is stored in the Exceptions directory if either an Exception Alarm or an Integrity Failure was detected on it as it passed the site.) A train number is shown for each train entry so that an Exception Detail report may easily be produced for any train listed on the summary.

The report is divided into a header section and a detail section. The header section contains general information about the site. The detail section contains summary information on each exception train (that is, on each train having an Exception Alarm, an Integrity Failure, or both) that passed the site.

The SmartScanNG² system calculates a checksum for each train. This checksum is stored with the train data. Later, when the system retrieves this data, it recalculates the checksum. If the two checksums don't match, the Exception Summary report so states in the detail section. So, instead of getting a train record, you'll get a checksum-error line.

Below is a sample of part of an Exception Summary report when Hotwheel alarm detection and the AEI subsystem were disabled when printing the report. (When the report is run, if the Hotwheel option on the Equipment Settings menu is disabled, the hotwheel information is hidden. When the report is run, if the AEI option is disabled, the tag information is hidden.) The contents of your report will be different. The version information in the sample below is for illustrative purposes only. It doesn't represent any real release of the firmware.

```
                         Southern Technologies Corporation
                          Next Generation Detector System
                                 EXCEPTION SUMMARY
==============================================================================
Software Version: IAIS_01-00 2022-10-24                           MP/KP: 1234.5
                                                                  Track: North
Current Alarm Settings
Absolute...... 150   Carside Slope... 1.31

Warm.......... 170   Carside Min..... 155
Differential.. 115   Cold Rail Temp..  10
Hot Wheel..... 702

Total Trains: 20
------------------------------------------------------------------------------
                                                D               Bearing     Bearing
                                        TxD Counts i    Speed      Average     Maximum    Amb
Train# Ref#   Date   Time Cars Axles  TO1  TO2  r Min Max Xit  East  West  East  West Temp  Bat
-------------------------------------------------------------------------------------------------
  19 B   19 12/11/22 05:08  67   272  272  272  S   6  30  10    23    21    48    49  +24F 13.0v
  18 B   18 12/11/22 04:13  68   276  276  276  N  24  33  32    15    13    29    30  +27F 13.1v
  17 B   17 12/11/22 03:51  52   332  332  332  N  23  36  36    15    14    35    39  +27F 13.0v
  16 B   16 12/11/22 03:14 131   530  530  530  N   9  29  29     8     5    27    20  +27F 13.0v
  15 B   15 12/11/22 01:26  49   318  318  318  S   7  11   8    17    16    34    31  +27F 13.1v
  14 B   14 12/11/22 00:49  75   304  304  304  S   5  14   9    19    17    36    34  +26F 13.0v
  13 B   13 12/11/22 00:08  85   346  346  346  N  21  32  32    17    16    40    30  +27F 12.9v
                 •
                 •
                 •
```

Below is a sample of part of an Exception Summary report when the Hotwheel option on the Equipment Settings menu is enabled. The contents of your report will be different.

```
                                        •
                                        •
                                        •

Current Alarm Settings
Absolute...... 150   Carside Slope... 1.31

Warm.......... 170   Carside Min..... 155
Differential.. 115   Cold Rail Temp..  10
Hot Wheel..... 702
Total Trains: 20
-------------------------------------------------------------------------------
                                                D                Bearing      Wheel
                                          TxD Counts i    Speed      Average     Maximum    Amb
Train# Ref#   Date   Time Cars Axles  TO1  TO2  r Min Max Xit  East  West  East  West Temp  Bat
-------------------------------------------------------------------------------------------------
                                        •
                                        •
                                        •
```

The table below lists the fields from the header section and the contents of each field.

Heading	Contents of Field
Version Info	The version numbers of the firmware and their release dates, which are in mm/dd/yy format. This firmware resides on the processor modules.
MP/KP	The five-digit milepost/kilometer post of the site. ***Section 4.0 - Serial Interface*** tells how to change this value using the MP/KP submenu.
Track	The track designator of the site. For single-track sites, the value is Single. For double-track sites, valid values are North, South, East, West, Main 1, Main 2, Main 3, and Middle. ***Section 4.0 - Serial Interface*** tells how to set this value using the Track Number submenu of the Setup menu.
Alarm Limits	The alarm parameters currently defined in the system setup. These values were in place at the time this report was run. • The value after Absolute is set by the Absolute option on the Alarm Settings menu. • The value after Warm is set by the Warm option on the Alarm settings menu. • The value after Differential is set by the Differential option on the Alarm Settings menu. • The value after Hot Wheel is set by the Hotwheel option on the Alarm Settings menu. • The value after Carside Slope is set by the Carside Slope option on the Alarm Settings (Advanced) menu. • The value after Carside Min is set by the Carside Minimum option on the Alarm Settings (Advanced) menu. • The value after Cold Rail Temp is set by the Cold Rail Temp option on the Alarm Settings menu. ***Section 4.0 - Serial Interface*** tells how to set these values.
Total Trains	The total number of trains visiting the site since the Trains directory was last cleared.

The table below lists the fields from the detail section and the contents of each field.

Heading	Contents of Field
Train#	The number that identifies the train in the Exceptions directory.
	There is one column in front of the Train# column and two between it and Date. The source information for these columns is included in a legend at the end of the Summary report. The legend lists these character columns and what each column can contain.)
Date	The date the train arrived at the site. Date is in mm/dd/yy format. ***Section 4.0 - Serial Interface*** tells how to change this value using the Date and Time submenu of the Setup menu.
Time	The time the train arrived at the site. Time is in 24-hour hh:mm format, where 8 a.m. is 08:00, noon is 12:00, 8 p.m. is 20:00, and midnight is 00:00. ***Section 4.0 - Serial Interface*** tells how to change this value using the Date and Time submenu of the Setup menu.
Cars	The total number of cars counted by the SmartScanNG² system.
Axles	The total number of axles counted by the SmartScanNG² system.
TO1	The total number of hits counted by gating transducer TO1. TO1 is the first gating transducer going north or east from the bearing scanner. It is the gating transducer closest to the bearing scanner.
TO2	The total number of hits counted by gating transducer TO2. TO2 is the second gating transducer going north or east from the bearing scanner. It is the gating transducer farthest from the bearing scanner.
AEI Tags	The total number of AEI tags stored. The number of tag pairs found plus those single tags that lack a match. This heading always appears, even if the AEI subsystem is disabled using the AEI option on the Equipment Settings menu.
Speed (mph)	The train's exit speed in miles per hour.
Dir	The direction the train was traveling. Valid values are N, S, E, and W.
Bearing Average	Under this heading are two columns, one for each bearing scanner, containing the maximum temperature read by the bearing scanners. If the track orientation is east and west, the bearing scanners are labeled north and south. If the track orientation is north and south, they are labeled east and west. This field appears only when the Hotwheel option on the Equipment Settings menu is disabled. If a train did not have the Hot Bearing option enabled during passage, this field contains "---" instead of a heat value.
Wheel Maximum	Under this heading are two columns, one for each wheel scanner, containing the maximum temperature read by the wheel scanners. If the track orientation is east and west, the wheel scanners are labeled north and south. If the track orientation is north and south, they are labeled east and west. This field appears only when the Hotwheel option on the Equipment Settings menu is enabled. If a train did not have the Hotwheel option enabled during passage, this field contains "---" instead of a heat value.
Amb Temp	The ambient temperature, in degrees Fahrenheit, at the time the train arrived at the site.
Bat	The system battery voltage at the time the train passed the site.

To produce an Exception Summary report:

1. Using the serial interface, display the Main menu.

   Section 4.0 - Serial Interface tells how to display the Main menu. The Main menu looks like this.

```
SmartSCAN NG2
12/11/2022 09:18:44 EST
Main Menu - Comm
----------------------------
[A] - Train Summary
[B] - Train Detail
[C] - Exception Summary
[D] - Exception Detail
[E] - System Status Report
            .
            .
            .
```

2. Select the **Exception Summary** report.
3. To exit the serial interface and return the SmartScanNG² system to normal operation, type **X**.

6.5 Exception Detail Report

The Exception Detail report provides detailed information on a single train. When choosing this report, you'll be prompted for a train number. When prompted, enter a train number from the Exception Summary report. The train number appears under the column titled "Train#" in the detail section of the Exception Summary report.

Carside Slope alarm detection is enabled/disabled using the Carside Slope option on the Equipment Settings menu. Hotwheel alarm reporting is enabled/disabled using the Hotwheel option on the Equipment Settings menu. The AEI subsystem is enabled/disabled using the AEI option on the Equipment Settings menu.

Where wheel scanners are properly installed, wheel temperatures are always recorded, even if the Hotwheel option is disabled. On the other hand, if the AEI option is disabled during train passage, no AEI information is recorded. If the Carside Slope option is disabled during train passage, no Carside Slope alarms are generated. But, if it is enabled at the time a report is requested, a carside-slope alarm-limit line is generated for each car of the train.

Below is a sample of part of an Exception Detail report when the Carside Slope option was enabled at the time the report was requested. The Hotwheel and AEI options were disabled. The contents of your report will be different. The version information in the sample below is for illustrative purposes only. It doesn't represent any real release of the firmware.

```
                        Southern Technologies Corporation
                         Next Generation Detector System
                                EXCEPTION DETAIL
================================================================================
Train#:  18                Axles: 276         Speed               MP/KP: 1234.5
  Date: 12/11/22            Cars: 68          Min: 24             Track: North
  Time: 04:13          Direction: North       Max: 33       Temperature:  +27F
                   Shutters Open: 112         Avg: 26           Battery: 13.1v
                          Length: 4069       Exit: 32
================================================================================
                   Resistor        Txdr
Scanner    Max Avg Read Req  CF    Counts     Alarm        Limit  Carside Parms
--------------------------------   -------    ------------------  -------------
East  Brng  29  15  300 288B   0   TO1 276    Absolute       150  Slope:   1.31

West  Brng  30  13  278 256B   0   TO2 276    Warm           255  Minimum:   90
East  Whl  --- ---  --- ---- ---              Differential   115
West  Whl  --- ---  --- ---- ---              Hot Wheel      702
Resistor Test Mode: Disabled
................................................................................
Dragging Equip Detection: Enabled
High Load Detection:      Enabled  - Announce eastbound only
Wide Load Detection:      Enabled  - Announcement disabled
Announce Warm Bearings:   Enabled
================================================================================
Software Version: IAIS_01-00 2022-10-24

--------------------------------------------------------------------------------
System Alarms

None

--------------------------------------------------------------------------------
Integrity Failures
 Stuck Dragger During Train Passage

--------------------------------------------------------------------------------

Axle Alarm Summary

   1 Dragging
                                          •
                                          •
                                          •


(continued on next page)
```

```
                                        •
                                        •
                                        •
   ------------------------------------------------------------------------------
   Announcements made

   Announcements Made

   " Iowa Interstate milepost 1 2 3 4 point 5 north track you have a defect"

   " Iowa Interstate milepost 1 2 3 4 point 5 north track dragging equipment near axle 1 not
working"
   " Iowa Interstate milepost 1 2 3 4 point 5 north track dragging equipment near axle 1 not
working detector out "

   ------------------------------------------------------------------------------
                Rail
    Car Axle East  West    ON  OFF PW1 PW2  Alarms
   ------------------------------------------------------------------------------
      1    1    0     0    55    0  21  20  Dragging Equipment
           2    0     0    55  128  21  20
           3    5     2    55  127  18  18
           4    3     3    55  902  20  19
           5    3     2    55  128  20  19
           6    0     0    55  127  18  17
        Carside Ave: East   2 West   1   Carside Alarms: East  92 West  91

      2    7    9    10    55  334  21  21
           8    6     3    55  128  21  21
           9    5    10    55  128  21  20
          10    1     9    55  944  21  20
          11    6     9    55  128  21  21
          12    5    14    55  128  21  20
        Carside Ave: East   6 West  10   Carside Alarms: East  97 West 103

      3   13   23    24    55  262  21  21
          14   11    15    55  107  20  20
          15   15    21    55 1057  22  20
          16   28    21    55  107  20  19
        Carside Ave: East  24 West  30   Carside Alarms: East 121 West 129

      4   17   23    20    55  159  17  16
          18   27    25    55  108  20  19
          19   10     5    55  983  21  21
          20    9    11    55  106  21  21
        Carside Ave: East  30 West  25   Carside Alarms: East 129 West 122

      5   21    7    14    55  162  21  20
          22    9     9    55  107  20  19
          23   10     6    55 1057  21  20
          24   12    14    55  107  21  21
        Carside Ave: East  13 West  14   Carside Alarms: East 107 West 108

                                        •
                                        •
                                        •
```

The extended Exception Detail report is divided into three sections. The header section contains general information about the site (like the MP/KP) and some detail information about the specific train (like the train's exit speed) that passed the site. The detail section contains more detailed information (like the car number) about the specific train. In between these two sections is the system-events section, which contains all System Alarms and Exception Alarms associated with the train.

The table below lists the fields from the header section and the contents of each field.

Heading	Contents of Field
Train#	The number that identifies the train in the Exceptions directory.
Date	The date the train arrived at the site. Date is in mm/dd/yy format. ***Section 4.0 - Serial Interface*** tells how to change this value using the Date and Time submenu of the Setup menu.
Time	The time the train arrived at the site. Time is in 24-hour hh:mm format, where 8 a.m. is 08:00, noon is 12:00, 8 p.m. is 20:00, and midnight is 00:00. ***Section 4.0 - Serial Interface*** tells how to change this value using the Date and Time submenu of the Setup menu.
Length	The length of the train in feet.
Speed	The train's exit speed in miles per hour.
Axles	The total number of axles counted by the SmartScanNG² system.
Cars	The total number of cars counted by the SmartScanNG² system.
Direction	The direction the train was traveling. Valid values are North, South, East, and West.
Shutters Open	The number of seconds it took the train to pass over the site.
MP/KP	The five-digit milepost/kilometer post of the site. ***Section 4.0 - Serial Interface*** tells how to change this value using the MP/KP submenu.
Track	The track designator of the site. For single-track sites, the value is Single. For double-track sites, valid values are North, South, East, West, Main 1, Main 2, Main 3, and Middle. ***Section 4.0 - Serial Interface*** tells how to set this value using the Track Number submenu of the Setup menu.
Temperature	The ambient temperature at the time the train arrived at the site. Temperature is in degrees Fahrenheit.
Battery	The system battery voltage at the time the train passed the site.
Brng	Location of the bearing scanners. If the track orientation is east and west, the bearing scanners are labeled north and south. If the track orientation is north and south, they are labeled east and west
Max	The maximum temperature, above the ambient temperature in degrees Fahrenheit, recorded by the bearing scanner on a given railside. For example, if the ambient temperature (at the time the train arrived at the site) is 77°F (25°C), and the value in this field is 112, the maximum temperature would be 189°F (87.2°C). If the train did not have the Hot Bearing option enabled during passage, this field contains "---" instead of a heat value.
Avg	The average temperature, above the ambient temperature in degrees Fahrenheit, calculated from all recorded temperatures from the bearing scanner on a given railside. For example, if the ambient temperature (at the time the train arrived at the site) is 86°F (30°C), and the value in this field is 55, the average temperature would be 141°F (60.6°C). If the train did not have the Hot Bearing option enabled during passage, this field contains "---" instead of a heat value.

Heading	Contents of Field
Resistor Read	The scanner resistor temperature (read after train passage), in degrees Fahrenheit, recorded by the bearing scanner on a given railside. If the train did not have the Hot Bearing option enabled during passage, this field contains "---" instead of a heat value.
Resistor Req	The resistor temperature, in degrees Fahrenheit, required by the bearing scanner on a given railside to avoid a Cold Resistor alarm. This value was calculated using the amount of time the shutters were open and the Resistor Test Mode option in effect at the time the train exits the site. If the Resistor Test Mode option is disabled, a zero appears in this field. If the train did not have the Hot Bearing option enabled during passage, this field contains "---" instead of a heat value.
	One of five uppercase letters follows the Resistor Req temperature. **B** The baseline resistor integrity test method was used for this train. **D** The resistor integrity test (that is, the Resistor Test Mode option) was disabled by the user. **I** The interim resistor integrity test method was used for this train. **T** For this train, the shutters were open for less than 30 seconds. **V** For this train, the battery voltage (measured with the shutters open) was less than 12.5 volts. For **D**, **T**, and **V**, the required resistor heat is set to zero (that is, a zero appears in the Resistor Read field). A **T** or **V** indicates that the integrity test was not performed due to low voltage or insufficient shutter open time, which could result in an invalid resistor integrity test if it was performed. If the train did not have the Hot Bearing option enabled during passage, this field contains "-" instead of a heat value.
CF	The percentage difference between the required resistor value and the value that was actually read. For example, if the required resistor temperature is 180 and the actual resistor temperature is 135 the correction factor would be 25% (1 - (135 / 180) = .25), and 25 would appear in this field. If the train did not have the Hot Bearing option enabled during passage, this field contains "---" instead of a heat value.
Txdr Counts	The gating transducer designator (either TO1 or TO2) followed by the total number of hits on that transducer.
Alarm Limit	The alarm parameters currently defined in the system setup. These values were in place at the time the train arrived at the site. • The value after Absolute is set by the Absolute option on the Alarm Settings menu. • The value after Warm is set by the Warm option on the Alarm settings menu. • The value after Differential is set by the Differential option on the Alarm Settings menu. • The value after Hot Wheel is set by the Hotwheel option on the Alarm Settings menu. ***Section 4.0 - Serial Interface*** tells how to set these values.

Heading	Contents of Field
Carside Parms	The Carside Slope alarm parameter values that were in place at the time the train arrived at the site. • The value after Slope is set by the Carside Slope option on the Alarm Settings (Advanced) menu. • The value after Minimum is set by the Carside Minimum option on the Alarm Settings (Advanced) menu. ***Section 4.0 - Serial Interface*** tells how to set these values.
Resistor Test Mode	The status of the post-train resistor integrity test at the time the train arrived at the site. Valid values (aka modes) are Enabled, Reduced, and Disabled. ***Section 4.0 - Serial Interface*** tells how to set this value using the Resistor Test Mode option on the Equipment Settings menu.
Wheel	The location of the wheel scanners. If the track orientation is east and west, the wheel scanners are labeled north and south. If the track orientation is north and south, they are labeled east and west.
Max	The maximum temperature, above the ambient temperature in degrees Fahrenheit, recorded by the wheel scanner on a given railside. If the train did not have the Hotwheel option enabled during passage, this field contains "---" instead of a heat value.
Avg	The average temperature, above the ambient temperature in degrees Fahrenheit, calculated from all recorded temperatures from the wheel scanner on a given railside. If the train did not have the Hotwheel option enabled during passage, this field contains "---" instead of a heat value.
Resistor Read	The scanner resistor temperature (read after train passage), in degrees Fahrenheit, recorded by the wheel scanner on a given railside. If the train did not have the Hotwheel option enabled during passage, this field contains "---" instead of a heat value.
Resistor Req	The resistor temperature, in degrees Fahrenheit, required by the wheel scanner on a given railside to avoid a Cold Wheel Scanner Resistor alarm. This value was calculated using the amount of time the shutters were open and the Resistor Test Mode option in effect at the time the train exits the site. If the Resistor Test Mode option is disabled, a zero appears in this field. If the train did not have the Hotwheel option enabled during passage, this field contains "---" instead of a heat value.

Heading	Contents of Field
	One of five uppercase letters follows the Resistor Req temperature. **B** The baseline resistor integrity test method was used for this train. **D** The resistor integrity test (that is, the Resistor Test Mode option) was disabled by the user. **I** The interim resistor integrity test method was used for this train. **T** For this train, the shutters were open for less than 30 seconds. **V** For this train, the battery voltage (measured with the shutters open) was less than 12.5 volts. For **D**, **T**, and **V**, the required resistor heat is set to zero (that is, a zero appears in the Resistor Read field). A **T** or **V** indicates that the integrity test was not performed due to low voltage or insufficient shutter open time, which could result in an invalid resistor integrity test if it was performed. If the train did not have the Hotwheel option enabled during passage, this field contains "-" instead of a heat value.
CF	The percentage difference between the required resistor value and the value that was actually read. For example, if the required resistor temperature is 180° and the actual resistor temperature is 135° the correction factor would be 25% (1 - (135 / 180) = .25), and 25 would appear in this field. If the train did not have the Hotwheel option enabled during passage, this field contains "---" instead of a heat value.
AEI System Data	The number of AEI tags read (by antenna0 and antenna1) and the total number of tags stored for the train. Where both tags of a tag pair are operational, each antenna will read one tag of the pair. The total number of tags stored represents the number of tag pairs found plus those single tags that lack a match. This heading and the columns under it appear only when the AEI subsystem was enabled while the train was passing the site.
Firmware Versions	The version numbers of the firmware and their release dates, which are in mm/dd/yy format. This firmware resides on the processor modules.

The table below lists the fields from the system-events section and the contents of each field.

Heading	Contents of Field
System Alarms	Lists any System Alarms and Integrity Failures detected at the time the train passed the site. If none were detected, this header is followed by the word "none." ***Appendix A - System Alarms*** describes the conditions and events that the system flags as System Alarms. ***Appendix B - Integrity Failures*** describes the conditions and events that the system flags as Integrity Failures.
Axle Alarm Summary	Lists each Exception Alarm found on the train and the axle on which it was found. If none were found, this header is followed by the word "none."

The table below lists the fields from the detail section and the contents of each field.

Heading	Contents of Field
Car	The car number as determined by the firmware.
Axle	The axle number.
Rail	Under this heading are two columns, one for each bearing scanner, containing the temperature read by the bearing scanners. If the track orientation is east and west, the bearing scanners are labeled north and south. If the track orientation is north and south, they are labeled east and west. This heading and the two columns under it appear only when the Hot Bearing option was enabled while the train passed the site.
Wheel	Under this heading are two columns, one for each wheel scanner, containing the temperature read by the wheel scanners. If the track orientation is east and west, the wheel scanners are labeled north and south. If the track orientation is north and south, they are labeled east and west. This heading and the two columns under it appear only when the Hotwheel option was enabled while the train passed the site.
ON	The number of milliseconds a bearing was scanned.
OFF	The number of milliseconds between axles (when no axle was between the gating transducers).
PW1	The recorded width of the pulse generated by gating transducer TO1. There is no fixed value for the pulse widths. Slower trains generate wider pulse widths (that is, they generate larger values) than faster-moving trains.
PW2	The recorded width of the pulse generated by gating transducer TO2. There is no fixed value for the pulse widths. Slower trains generate wider pulse widths (that is, they generate larger values) than faster-moving trains.
Alarms	Any Exception Alarm found on the given axle.

To produce the extended Exception Detail report:

1 Using the serial interface, display the Main menu.

Section 4.0 - Serial Interface tells how to display the Main menu. The Main menu looks like this.

```
SmartSCAN NG2
12/16/2022 11:27:49 EST
Main Menu - Comm
----------------------------
[A] - Train Summary
[B] - Train Detail
[C] - Exception Summary
[D] - Exception Detail
[E] - System Status Report
[F] - Last Train
            •
            •
            •
```

2 Select **Exception Detail**.

This prompt appears.

```
Enter Train Number:
```

3 Type the train number.

If you typed a three-digit invalid train number, the Main menu reappears. If you typed a three-digit valid train number, the prompt below appears.

4 If you typed less than four digits, press **[Enter]**.

If you typed a three-digit invalid train number, the Main menu reappears. If you typed a three-digit valid train number, this prompt appears.

```
Abbreviated? (y/n)
```

5 To produce the extended Exception Detail report, type **N**.

6 To exit the serial interface and return the SmartScanNG² system to normal operation, type **X**.

6.6 Abbreviated Exception Detail Report

The abbreviated Exception Detail report is like the extended Exception Detail report. However, the abbreviated report doesn't display all the recorded axle data. It only displays axle data for:

- The car immediately preceding a car with an alarmed axle.
- The car containing the alarmed axle.
- The car immediately following the car with the alarmed axle.

For example, assume that a train consisted of 3 locomotives and 20 cars, and Exception Alarms were found on cars 3, 10, 15, and 17. The Abbreviated Exception Detail report for this train would only list axle data for cars 2, 3, 4, 9, 10, 11, 14, 15, 16, 17, and 18. These car numbers comprise the alarmed cars themselves and all cars immediately before and immediately after them.

Like the extended Exception Detail report, the abbreviated Exception Detail report is divided into three sections. The header section contains general information about the site (like the MP/KP) and some detail information about the specific train (like the train's exit speed) that passed the site. The detail section contains more detailed information (like the car number) about the specific train. In between these two sections is the system-events section, which contains all System Alarms and Exception Alarms associated with the train.

Below is a sample of part of an abbreviated Exception Detail report when the AEI option, the Carside Slope option and the Hotwheel option were all disabled at the time the report was requested. The contents of your report will be different.

```
                         Southern Technologies Corporation
                          Next Generation Detector System
                                 EXCEPTION DETAIL
                                    ABBREVIATED
==============================================================================
Train#:  19                Axles: 272         Speed               MP/KP: 1234.5
  Date: 12/11/22            Cars: 67          Min: 6              Track: North
  Time: 05:08          Direction: South       Max: 30       Temperature:  +24F
                   Shutters Open: 296         Avg: 18           Battery: 13.0v
                          Length: 6187       Exit: 10
==============================================================================

                              .
                              .
                              .
System Alarms
 VERY Slow Train

------------------------------------------------------------------------------
Integrity Failures
 Stuck Dragger During Train Passage

------------------------------------------------------------------------------
Axle Alarm Summary

   1 Dragging Equipment

------------------------------------------------------------------------------
Announcements Made

" Iowa Interstate milepost 1 2 3 4 point 5 north track you have a defect"
" Iowa Interstate milepost 1 2 3 4 point 5 north track dragging equipment near axle 1 not
working"
" Iowa Interstate milepost 1 2 3 4 point 5 north track dragging equipment near axle 1 not
working detector out "

-----------------------------------------------------------------------------
              Rail
 Car Axle East  West    ON  OFF PW1 PW2  Alarms
-----------------------------------------------------------------------------
   1    1    0     0    44    0  18  18  Dragging Equipment
        2    0     3    44  100  18  17
        3   29    24    44  101  18  18
        4   27    25    44  684  18  17
        5   17    29    44  100  16  16
        6   26    27    44  101  16  16

   2    7    1     0    44  257  17  16
        8    2     0    44  101  18  17
        9    0     0    44  101  18  18
       10    0     0    44  686  15  14
       11    1     0    44  102  17  17
       12    1     0    44  101  17  16
```

To produce the abbreviated Exception Detail report:

1 Using the serial interface, display the Main menu.

Section 4.0 - Serial Interface tells how to display the Main menu. The Main menu looks like this.

```
SmartSCAN NG2
12/16/2022 11:27:49 EST
Main Menu - Comm
----------------------------
[A] - Train Summary
[B] - Train Detail
[C] - Exception Summary
[D] - Exception Detail
[E] - System Status Report
[F] - Last Train
            •
            •
            •
```

2 Select **Exception Detail**.

This prompt appears.

```
Enter Train Number:
```

3 Type the train number.

If you typed a three-digit invalid train number, the Main menu reappears. If you typed a three-digit valid train number, the prompt below appears.

4 If you typed less than four digits, press **[Enter]**.

This prompt appears.

```
Abbreviated? (y/n)
```

5 To produce the abbreviated Exception Detail report, type **Y**.

6 To exit the serial interface and return the SmartScanNG² system to normal operation, type **X**.

6.7 Last Train Report

The Last Train report is identical to the Train Detail report except for this report; you don't specify a train. A report on the most current train is produced.

To produce a Last Train report:

1 Using the serial interface, display the Main menu.

Section 4.0 - Serial Interface tells how to display the Main menu. The Main menu looks like this.

```
            .
            .
            .
  [D] - Exception Detail
  [E] - System Status Report
  [F] - Last Train
  [G] - Train DSRs
  [H] - AEI Diagnostic
            .
            .
            .
```

2 Select Last Train to produce the report.

This prompt appears.

```
  Abbreviated? (y/n)
```

3 To produce the abbreviated Last Train report, type Y. To produce an extended Last Train report, type **N**.

4 To exit the serial interface and return the SmartScanNG² system to normal operation, type **X**.

6.8 Train DSRs

Train DSR (Dynamic Scan Rate) records store those temperature samples collected by a scanner that exceed the warm-bearing or warm-wheel trigger level. Only 16 bearing-related and 16 wheel-related DSR records are kept per train. When prompted, type a train number from the Train Summary report. The train number appears under the column titled "Train#" in the detail section of that report. Those trains with DSR records will have a single character status code in column A (see Section 6.1) of the Train Summary Report.

1 Using the serial interface, display the Main menu.

```
SmartSCAN NG2, MP/KP:1234.5, Track:North
10/10/2022 13:19:23, 11.7V, 73°F
Main Menu - Comm
----------------------------------------
[A] - Train Summary
[B] - Train Detail
[C] - Exception Summary
[D] - Exception Detail
[E] - System Status Report
[F] - Last Train
[G] - Train DSRs
            .
            .
            .
```

2 Select **Train DSRs**.

A prompt like this appears:

```
Enter train number:
```

3 Enter the number of the selected train. These prompts appear:

```
Is train from Exception Summary report? (y/n)

Separate by gate period? (y/n)
```

To display DSR samples in the single-line, format, answer 'N' to the "Separate by gate period? (y/n)" prompt. A report like this appears:

```
No bearing DSRs stored.

Warmest 16 Wheel DSRs:
Axle 13, North Wheel Scanner:
   8,8,8,8,8,8,8,8,8,8,8,8,8,12,15,21,30,38,52,70,88,112,140,165,190,2
   26,249,292,327,365,403,431,441,448,449,445,441,426,404,383,361,341,
   323,305,292,278,260,249,242,236,234,231,228,224,222,221,220,220,220
   ,219,219,219,220,221,224,228,231,234,236,240,246,253,268,285,295,30
   8,324,339,355,365,372,371,361,350,328,305,283,248,231,199,180,157,1
   36,112,91,74
Axle 13, South Wheel Scanner:
   8,8,8,8,8,8,8,8,8,8,8,8,8,12,18,26,36,46,66,88,114,146,171,197,236,
   272,310,358,404,448,492,513,527,535,536,531,519,507,487,459,439,414
   ,389,369,349,332,316,305,296,288,283,274,268,262,260,258,256,256,25
   4,254,254,256,256,260,264,268,276,283,289,295,303,313,327,341,357,3
   78,399,421,437,443,448,446,441,427,399,367,334,303,270,238,213,186,
   161,138,112,90
Axle 14, South Wheel Scanner:
   8,8,8,8,8,8,8,8,8,8,8,8,8,12,21,29,40,55,74,94,128,159,189,230,260,
   306,352,405,456,508,553,593,618,627,629,626,616,590,568,536,509,489
   ,459,439,416,395,375,359,347,334,327,321,313,310,308,306,305,305,30
   4,304,304,305,306,307,310,312,320,325,333,343,353,367,382,400,421,4
   41,458,485,504,512,518,516,509,498,467,437,398,357,321,288,246,222,
   189,163,140,112
```

The display DSR samples by gate period, answer 'Y' to the "Separate by gate period? (y/n)" prompt. Displaying an axle's 96 DSR samples by gate period separates the recorded values into three groups:

- **Pre-gate:** The 24 samples (1-24) recorded immediately before an axle passes between the transducers.
- **In-gate:** The 48 samples (25-72) recorded as an axle passes between the transducers.
- **Post-gate:** The 24 samples (73-96) recorded immediately after an axle passes between the transducers.

A report like this appears:.

```
Warmest 16 Bearing DSRs:

Axle 1, North Bearing Scanner:
Pre-gate : 1,1,1,1,1,1,1,1,1,1,1,1,1,1,1,1,1,1,1,1,1,1,1
In-gate  :
1,1,1,1,1,1,1,1,1,1,1,1,1,1,1,1,1,2,5,10,17,26,31,41,52,61,71,79,87,93,96,
98,97,96,93,89,84,78,71,64,56,44,34,24,21,15,10
Post-gate: 6,5,3,2,1,1,1,1,1,1,1,1,1,1,1,1,1,1,1,1,1,1,1

Axle 6, South Bearing Scanner:
Pre-gate : 0,0,0,0,0,0,0,0,0,0,0,0,0,0,0,0,0,0,0,0,0,0,0
In-gate  :
0,0,0,0,0,0,0,0,0,0,0,0,0,0,0,0,0,0,0,1,2,6,12,22,29,40,53,64,77,89,99,107,1
13,117,117,117,117,113,108,103,95,86,78,65,53,40,29,25
Post-gate: 16,11,7,5,2,2,1,1,0,0,0,0,0,0,0,0,0,0,0,0,0,0,0

Axle 8, South Bearing Scanner:
Pre-gate : 1,1,1,1,1,1,1,1,1,1,1,1,1,1,1,1,1,1,1,1,1,1,1
In-gate  :
1,1,1,1,1,1,1,1,1,1,1,1,1,1,1,1,1,1,2,5,8,16,27,35,48,63,77,91,106,116,124
,131,136,138,137,134,130,124,117,110,102,91,76,61,46,34,29
Post-gate: 20,13,8,6,3,2,2,1,1,1,1,1,1,1,1,1,1,1,1,1,1,1,1

Warmest 16 Wheel DSRs:

Axle 9, North Wheel Scanner:
Pre-gate : 8,8,8,8,8,8,8,8,8,8,8,8,8,12,15,21,30,38,52,70,88,112,140,165
In-gate  :
190,226,249,292,327,365,403,431,441,448,449,445,441,426,404,383,361,341,323,
305,292,278,260,249,242,236,234,231,228,224,222,221,220,220,220,219,219,219,
220,221,224,228,231,234,236,240,246,253
Post-gate:
268,285,295,308,324,339,355,365,372,371,361,350,328,305,283,248,231,199,180,
157,136,112,91,74
              •
              •
              •
```

6.9 System Status Report

The System Status report contains the system's current setup configuration. Once a SmartScanNG² system is set up properly, print this report. Then, keep it in the wayside enclosure for future reference. Should you ever need to set up the system again, you'll have most of the information you'll need in this report.

Below is a sample of the top half of a System Status report. The contents of your report will be different.

```
                              Southern Technologies Corporation
                               Next Generation Detector System
                                    SYSTEM STATUS REPORT
==============================================================================================
            Date:12/30/22  Time:15:51       Battery: 11.8v        Ambient Temp.: +73F
----------------------------------------------------------------------------------------------
 SICM Board Rev................. 1.2 or lower     MP/KP.................................. 1234.5
 Time Zone........................... Eastern     Track.................................. North
 Daylight Savings Time............... Disabled     Track Dir................................ N/S
 AC Power.................................. On     Velocity............................ Disabled

 Software Version
----------------------------------------------------------------------------------------------
 IAIS_01-00 2022-10-24

 Speech Version
----------------------------------------------------------------------------------------------
 IAIS Speech Ryan 1.0

 Alarm Settings
 ---------------------------------------------------------------------------------------------
 Absolute................................ 200     Warm Alarm Limit......................... 170
 Differential............................ 115     Hot Wheel................................ 702
 Cold Rails................................ 2     Cold Rail Temp........................... 10
 Cold Res Counter........................... 3     Differential Enabled..................... Yes

 Alarm Settings (Advanced)
----------------------------------------------------------------------------------------------
 Carside Slope........................... 1.31     Carside Minimum.......................... 155
 Res Test: Minimum Rail Avg............... 25     Res Test: Minimum Wheel Avg............... 28
 Bearing DSR Capture Temp................. 72     Wheel DSR Capture Temp................... 361
 Max Hot Bearings......................... 10     Max Hot Wheels........................... 32
 Max Dragging Equipment................... 10

 Equipment Settings
----------------------------------------------------------------------------------------------
 Dragger................................ Yes     Hot Wheel................................ No
 Hot Bearing............................ Yes     High Load................................ No
 Wide Load............................... No     AEI...................................... No
 Presence Hardware....................... No     Advance Transducers...................... No
 AC Power Off Monitor.................... No

 Equipment Settings (Advanced)
----------------------------------------------------------------------------------------------
 Carside Slope........................... No     Winter Cycle....................... Jan - Jan
 Gate Distance....................... 24.0 in     Dragger Debounce Time................. 100 ms
 Pre Train Dragger Dist................... 6 ft     Pre Train High/Wide Dist................ 0 ft
 Presence Timeout Period............... 10 sec     System Voltage......................... 12 V
 Resistor Test........................ Enabled     Clearance Mode...................... Separate
 Clearance Type.................... Light Beam     Transducer Gain...................... Normal
 Transducer Type.................... Magnetic     WILD Detector Co-Located................... No
                                 •
                                 •
                                 •
```

Below is a sample of the bottom half of a System Status report. The contents of your report will be different. The version information in the sample below is for illustrative purposes only. It doesn't represent any real release of the firmware.

```
                                 •
                                 •
                                 •
Message Settings
-----------------------------------------------------------------------------------------------
Arrival Message........................... No     Customer Name............................ No
Axles..................................... No     Speed.................................... No
Temperature............................... No     Slow..................................... No
Power Off................................. No     Repeat No Defects........................ No
Length.................................... No     Cars Count............................... No

Lft/Rt Alarm Ref.......................... No     Car ID With Alarm........................ No

Message Settings (Advanced)
-----------------------------------------------------------------------------------------------
Announce Hot Wheels...................... Yes     Announce Differential.................... Yes
Announce High Load....................... Yes     Announce Wide Load....................... Yes
Announce Warm Bearings................... Yes     Request EOT Timer...................... 5 min
Rebroad DTMF Code........................ 001     Num EOT Repeats............................ 0
EOT Repeat Delay....................... 5 sec     Post-Train Broadcast Delay............. 5 sec

Network Settings
-----------------------------------------------------------------------------------------------
Use Static Address........................ No     Static IP...................... 192.168.1.201
Static Mask................... 255.255.255.0     Default Gateway................. 192.168.1.1
DNS Server...................... 192.168.1.1     TELNET Port............................... 23
FTP Port................................... 21     HTTP Port................................. 80
HTTPS Port............................... 8080     Use Wifi................................. No
Wifi Inactivity Timeout............... 10 min

Sunshots
-----------------------------------------------------------------------------------------------
Sunshot Filter...................... Disabled     Scanner Orientation........................ 0
Latitude............................ 35.0456     Longitude........................... -85.3097

Port Settings
-----------------------------------------------------------------------------------------------
COM1 (Serial Interface)...... Baud 19200 None     COM2 (Not Used)............... Baud 19200 None
COM3 (Velocity)............... Baud 19200 None     COM4 (Not Used)............... Baud 19200 None
COM5 (AEI)................... Baud 19200 None     COM6 (FlashHost)............. Baud 57600 None
RS485 (Not Used)............... Baud 9600 None     Page Lines................................ 30

AEI Settings
-----------------------------------------------------------------------------------------------
Tag Reader Type......................... None     ID Separation............................. 1
Consecutive Reads........................... 2     RF Frequency (MHz)................... 915.000
RF Attenuation (dB)......................... 0     Multi-Track Tag Filter............... Disabled
Antenna 0 Offset..................... 0 (TO1)     Antenna 1 Offset..................... 0 (TO1)

Scanner Calibration Date / Digital Potentiometer Settings
-----------------------------------------------------------------------------------------------
Rail 1  Type III....... 04/28/2022 09:05 / 41     Rail 2  Type III....... 04/28/2022 09:07 / 40
Wheel 1 Type III....... 04/28/2022 09:09 / 41     Wheel 2 Type III....... 04/28/2022 09:11 / 42

Resistor Baseline
-----------------------------------------------------------------------------------------------
Rail 1  Type III....................... Valid     Rail 2  Type III....................... Valid
Wheel 1 Type III....................... Valid     Wheel 2 Type III....................... Valid
```

The table below lists the fields on the System Status report and the contents of each field.

Heading	Contents of Field
Date	The date at the time this report was generated. Date is in mm/dd/yy format. ***Section 4.0 - Serial Interface*** tells how to change this value using the Date and Time submenu of the Setup menu.
Time	The time at the time this report was generated. Time is in 24-hour hh:mm format, where 8 a.m. is 08:00, noon is 12:00, 8 p.m. is 20:00, and midnight is 00:00. ***Section 4.0 - Serial Interface*** tells how to change this value using the Date and Time submenu of the Setup menu.
Battery	The system battery voltage at the time this report was generated.
Ambient Temp	The ambient temperature at the time this report was generated. Temperature is in degrees Fahrenheit.
Time Zone	The time zone that is currently defined in the system setup. Valid values are Eastern, Central, Mountain, and Pacific. ***Section 4.0 - Serial Interface*** tells how to change this value using the Date and Time submenu.
Daylight Savings Time	Whether daylight-saving time is to be observed or not. If disabled, all times throughout the year are in standard time. If enabled, all times between the second Sunday in March and the first Sunday in November are in daylight-saving time. All other times are in standard time. ***Section 4.0 - Serial Interface*** tells how to change this value using the Date and Time submenu of the Setup menu.
MP/KP	The five-digit milepost/kilometer post of the site. ***Section 4.0 - Serial Interface*** tells how to change this value using the MP/KP submenu.
Track Dir	The track direction of the site. Valid values are N/S (for north/south) and E/W (for east/west). ***Section 4.0 - Serial Interface*** tells how to change this value using the Track Number submenu of the Setup menu.
Track	The track designator of the site. For single-track sites, the value is Single. For double-track sites, valid values are North, South, East, West, Main 1, Main 2, Main 3, and Middle. ***Section 4.0 - Serial Interface*** tells how to change this value using the Track Number submenu of the Setup menu.
Alarm Settings	The alarm parameters and limits as they are currently defined in the system setup. ***Section 4.0 - Serial Interface*** tells how to change these parameters and limits using the Alarm Settings menu of the Setup menu.
Equipment	Equipment configuration as currently defined in the system setup. ***Section 4.0 - Serial Interface*** tells how to change this configuration using the Equipment Settings menu of the Setup menu.
Messages	Message configuration as currently defined in the system setup. ***Section 4.0 - Serial Interface*** tells how to change this configuration using the Messages menu of the Setup menu.
Scanner Calibration Date	Date and time each scanner was last calibrated. The autocalibration function maintains these fields.

Heading	Contents of Field
Port Settings	Communications port parameter settings as currently defined in system setup. These parameters reflect the baud rate and parity settings for each communications port. ***Section 4.0 - Serial Interface*** tells how to change these parameter settings using the Setup menu.
AEI Reader Parameters	This heading appears when the AEI subsystem is enabled using the AEI option on the Equipment Settings menu. Below are the AEI Reader Parameters currently defined in the system setup. These values were in place at the time this report was run. **ID Separation** specifies the number of intervening tags that must be read and reported before a given tag is reported again. Valid values are 1, 2, 3, and 4. The default is 2. **Consecutive Reads** specifies the number of times that a tag must be read before it is considered a valid (reportable) tag. Valid values are 1, 2, 3, and 4. The default is 2. **Decode as ASCII Tags** specifies whether the tag data is to be interpreted as ASCII characters or in the encoded format. ***Section 4.0 - Serial Interface*** tells how to set these values using the AEI Reader Parameters menu of the Setup menu.
Firmware Versions	The version numbers of the firmware and their release dates, which are in mm/dd/yy format. This firmware resides on the processor modules.
COP Resets	Number of COP resets occurring since the last time the counters were cleared. The top value is for processor-A (aka Analyzer Processor). The bottom value is for processor-B (aka Communications Processor). ***Section 4.0 - Serial Interface*** tells how to clear the counters using the System Functions menu.
Resistor Data	**See the explanation below.**

For the resistor integrity test that is performed after train passage, there are two methods used to calculate the expected resistor temperature. The baseline resistor integrity test method requires the prerequisite of valid resistor baseline data to be stored in nonvolatile memory. Until the system acquires this data, it applies the interim resistor integrity test method to each train. The resistor data used in the baseline resistor integrity test method appears at the bottom of the System Status report, as shown below.

```
Resistor Data
-------------------------------------------------------------------------------
VOLTS AMB DATE     TIME  STATUS   30  40  50  60  70  80  90 100 110 120 130
     140 160 180 200 220 240 260 280 300 320 340 360 380 400 420 440 460 480
-------------------------------------------------------------------------------
RAIL 1 (TypeII)
13.2  043 12/02/22 15:57 VALID    56, 71, 82, 91,100,105,111,116,118,122,124
     127,130,134,136,137,140,141,142,144,145,147,148,149,150,151,152,154,154
RAIL 2 (TypeII)
13.2  043 12/02/22 15:57 VALID    58, 71, 81, 89, 96,101,105,109,110,112,115
     117,118,122,123,125,125,128,129,130,131,132,134,134,135,137,137,138,138
```

Included in the data above is a resistor heat profile of each scanner resistor, which covers a period of 30 to 480 seconds in 10 and 20-second intervals. The differences in resistor heat between the two scanners are due to the cable lengths used in this example. A 65-foot (19.8-meter) cable for the rail1 bearing scanner and a 100-foot (30.5-meter) cable for the rail2 bearing scanner. Additional items in the data are the battery voltage measured with the shutters open, the date and time of the data acquisition, and the status of the heat profile data.

In this example, the status of both sets of resistor data is **VALID**. Meaning they are being used in the baseline integrity test for each train. There are two other possibilities for status, pending and invalid. If the word **PENDING** appears in the status column, the system is waiting for the resistors to cool before acquiring resistor data or for the battery to charge to 12.5 volts. **INVALID** indicates that the system has tried twice and could not acquire valid resistor data. In either case, the system applies the interim integrity test to passing trains, which doesn't require resistor baseline data.

The system acquires the resistor data 20 minutes after the user calibrates the scanners with the autocalibration function. The resistor data acquisition runs unattended. Twenty minutes is the cooling period required to allow the resistors to return to ambient temperature after autocalibration. If a train should interrupt the cooling period, the resistor data acquisition runs 20 minutes after the shutters close following the passage of the train.

During the resistor-cooling period, the system announces through the speaker the following. These announcements aren't broadcast over the radio.

- A beep sounds once per minute until two minutes before the resistor test.
- At two minutes until the test, "Scanner resistor test beginning in 2 minutes" is voiced.
- At one minute until the test, "Scanner resistor test beginning in 1-minute" is voiced.

After the resistor cooling period:

- As the test begins, "Testing" is voiced. During this time, the word PENDING appears in the status column of the Resistor Data section.
- If the test is successful, "System working" is voiced. The word VALID appears in the status column of the Resistor Data section, signifying that the baseline test applies to each passing train.
- If the test isn't successful, "Scanner resistor test beginning in two-zero minutes" is voiced, meaning that the system will try once more after 20 minutes to acquire an accurate resistor heat profile. During this time, the word PENDING appears in the status column of the Resistor Data section. If the test fails a second time, the word INVALID appears in the same column. The system applies the interim integrity test to each passing train while either PENDING or INVALID appears.

To produce a System Status report:

1 Using the serial interface, display the Main menu.

Section 4.0 - Serial Interface tells how to display the Main menu. The Main menu looks like this.

```
SmartSCAN NG2, MP/KP:1234.5, Track:North
09/30/2022 15:54:57, 11.8V, 73°F
Main Menu - Comm
----------------------------------------
[A] - Train Summary
[B] - Train Detail
[C] - Exception Summary
[D] - Exception Detail
[E] - System Status Report
            .
            .
            .
```

2 Select **System Status**.

3 After producing the report, you are returned to the Main menu.

At this time, you can produce another report by selecting the appropriate option.

4 When done, close the LOG file.

5 To exit the serial interface and return the SmartScanNG² system to normal operation, type **X**.

6.10 AEI Diagnostic Detail Report

The AEI Diagnostic Detail report provides detailed information on a single train. It contains information that can be useful in troubleshooting AEI-related problems. When choosing this report, you'll be prompted for a train number. When prompted, type a train number from the Train Summary report. The train number appears under the column titled "Train#" in the detail section of that report.

The AEI subsystem is enabled/disabled using the AEI option on the Equipment Settings menu. If the AEI option is disabled during train passage, no AEI information is recorded.

Below is a sample of part of an AEI Diagnostic Detail report when the AEI option on the Equipment Settings menu was enabled while the train passed the site.The contents of your report will be different. The version information in the sample below is for illustrative purposes only. It doesn't represent any real release of the firmware.

The AEI Dignostic Detail report is divided into four sections. The header section contains general information about the site (like MP/KP) and some detail information about the specific train (like arrival time and exit speed) that passed the site. The, “AEI System Data”, section contains information that reflects data associated specifically with the AEI hardware subsystem (like AEI tag counts). The, “T94 Report Data”, section contains information that would have been included in fields in the report, for this train, that was sent to the central office. The last section of the report presents the detailed axle (defect detector) related data and tag (AEI) related data in a way intended to illustrates the timing of tag reads in relation to the timing of the wheels as they crossed the gating transducers.

```
                         Southern Technologies Corporation
                          Next Generation Detector System
                                  AEI Diagnostic
  ==============================================================================
  Train#:  18                  Speed:  49MPH                 MP/KP: 0001.2
    Date: 02/03/23             Axles: 432                    Track: Single
    Time: 12:25            Direction: South            Temperature:  +28F
  Length:  5919ft      Shutters Open:   94                Battery: 13.6v
                                                   Car Breakout Ratio: 1.20
  ==============================================================================
  AEI System Data:
  Tags Read: 206              Length:  6514ft
  Antenna 0: 103               Axles:  411
  Antenna 1: 103
  ==============================================================================
  T94 Report Data:
  Locomotives -  Tagged:   1    Untagged:   0    Conversion Status:   A
  Railcars    -  Tagged: 102    Untagged:   0    Conversion Status:   A
  Status Codes-  Equip :   G    Movement:   A          Termination:   N
  Speed       -     Min:  49         Max:  49                  Avg:  49
  Errors      -  Length:  36    Platform:   4
  ==============================================================================
  Software Version: IAIS_01-00 2022-10-24
  ------------------------------------------------------------------------------

  ---------------------------------------------------------------------------
  TMSTMP  Axle Truck  On  Off  PW1 PW2
  00000 Car=1, Axles=6, Trks=2, Tags=2, Spd=49, Dir=S, Len=65, Ant1Window=00000|03347
  03077      1    1   27  3069  18 18
  03155      2    1   27   49  18 18
  03232      3    1   27   49  18 18
  03312   *CSXT   729 side=L trk=1 len=73 axls=6 S|L|0|4 hs0= 4 hs1=18 flags=211
rcvdTS=03364|03365|05164 QCnt=0

  03671    CSXT   729 side=R trk=2 len=73 axls=6 S|L|0|4 hs0= 4 hs1=18 flags=124
rcvdTS=03814|03964|05164 QCnt=0
  03682      4    2   27  422  18 18
  03759      5    2   27   49  18 18
  03836      6    2   27   49  18 18
  03907 CarEnd=  1, flags=6, Ant0Window=03605|03907


  03908 Car=2, Axles=6, Trks=2, Tags=2, Spd=49, Dir=S, Len=66, Ant1Window=03908|04247
  03978      7    3   27  113  18 18
  04055      8    3   27   49  19 18
  04132      9    3   27   49  18 18
  04134   *TBOX667179 side=R trk=3 len=67 axls=4 S|R|0|4 hs0=16 hs1= 7 flags=211
rcvdTS=04264|04314|06013 QCnt=0

  04582     10    4   27  422  18 18
  04649    TBOX667179 side=L trk=4 len=67 axls=4 S|R|0|4 hs0=16 hs1= 7 flags=124
rcvdTS=04714|04864|06013 QCnt=0
  04659     11    4   27   49  18 18
  04736     12    4   27   49  18 18
  04807 CarEnd=  2, flags=5, Ant0Window=04505|04807


  04808 Car=3, Axles=6, Trks=2, Tags=2, Spd=49, Dir=S, Len=65, Ant1Window=04808|05147
  04878     13    5   27  113  18 18
  04955     14    5   27   49  18 18
  05032     15    5   27   49  18 18
  05099   *TBOX663532 side=R trk=5 len=68 axls=4 S|R|0|4 hs0=16 hs1=16 flags=211
rcvdTS=05164|05213|06763 QCnt=0

                 .
                 .
                 .
```

The table below lists the fields from the header section and the contents of each field.

Heading	Contents of Field
Train#	The number that identifies the train in the Trains directory.
Date	The date the train arrived at the site. Date is in mm/dd/yy format. ***Section 4.0 - Serial Interface*** tells how to change this value using the Date and Time submenu of the Setup menu.
Time	The time the train arrived at the site. Time is in 24-hour hh:mm format, where 8 a.m. is 08:00, noon is 12:00, 8 p.m. is 20:00, and midnight is 00:00. ***Section 4.0 - Serial Interface*** tells how to change this value using the Date and Time submenu of the Setup menu.
Length	The length of the train in feet.
Speed	The train's exit speed in miles per hour.
Axles	The total number of axles counted by the SmartScanNG² system.
Direction	The direction the train was traveling. Valid values are North, South, East, and West.
Shutters Open	The number of seconds it took the train to pass over the site.
MP/KP	The five-digit milepost/kilometer post of the site. ***Section 4.0 - Serial Interface*** tells how to change this value using the MP/KP submenu.
Track	The track designator of the site. For single-track sites, the value is Single. For double-track sites, valid values are North, South, East, West, Main 1, Main 2, Main 3, and Middle. ***Section 4.0 - Serial Interface*** tells how to set this value using the Track Number submenu of the Setup menu.
Temperature	The ambient temperature at the time the train arrived at the site. Temperature is in degrees Fahrenheit.
Battery	The system battery voltage at the time the train passed the site.
Car Breakout Ratio	A value used internally by the detector during the process of allocating axle data records to vehicles.

The table below lists the fields from the, “AEI System Data”, section and the contents of each field.

Heading	Contents of Field
Tags Read	The total number of tags read by the AEI subsystem.
Antenna 0	The total number of tags read by the antenna connected to the Port 0 coax connector on the tag reader module.
Antenna 1	The total number of tags read by the antenna connected to the Port 1 coax connector on the tag reader module.
Length	The sum of the length fields found in each tag, or tag pair, read.
Axles	The sum of the axle count fields found in each tag, or tag pair, read.

The table below lists the fields from the, “T94 Report Data”, section and the contents of each field. This section of the report presents some fields that are ultimately used to populate some of the fields included in the report, for this train, that would have been transmitted to the central office. The AAR specification S-9203A should be consulted for detailed descriptions of these fields and their contents.

Heading	Contents of Field
Locomotives	
Tagged	The number of locomotives identified on the train that had AEI tags
Untagged	The number of locomotives identified on the train that did NOT have AEI tags
Railcars	
Tagged	The number of railcars identified on the train that had AEI tags
Untagged	The number of railcars identified on the train that did NOT have AEI tags
Status Codes	
Equip	Used to indicate issues that were found with any of the hardware subsystems.
Movement	Indicates the type of train move recorded – pull through, pull through with direction changes, reversed with switching, etc.
Termination	Indicates whether the recording of the train was terminated normally or the detector forced a timeout due to detected hardware issues (e.g. presence stuck on)
Speed	
Min	The minimum speed recorded while a train crossed the site
Max	The maximum speed recorded while a train crossed the site
Avg	The average speed recorded for the train.
Errors	
Length	The number of vehicles for which the length recorded by the detector differed, by more than 15%, from the length field programmed into the assigned tag.
Platform	The number of vehicles for which the platform code in a tag did not match the vehicle to which it had been assigned, as determined by the vehicle’s axle pattern.

The following excerpt is from the detail section of the AEI Diagnostic report

```
                  •
                  •
                  •
  TMSTMP  Axle Truck  On  Off  PW1 PW2
  00000 Car=1, Axles=6, Trks=2, Tags=2, Spd=49, Dir=S, Len=65, Ant1Window=00000|03347
  03077      1    1   27  3069  18 18
  03155      2    1   27   49  18 18
  03232      3    1   27   49  18 18
  03312   *CSXT   729 side=L trk=1 len=73 axls=6 S|L|0|4 hs0= 4 hs1=18 flags=211
rcvdTS=03364|03365|05164 QCnt=0

  03671    CSXT   729 side=R trk=2 len=73 axls=6 S|L|0|4 hs0= 4 hs1=18 flags=124
rcvdTS=03814|03964|05164 QCnt=0
  03682      4    2   27  422  18 18
  03759      5    2   27   49  18 18
  03836      6    2   27   49  18 18
  03907 CarEnd=  1, flags=6, Ant0Window=03605|03907
                  •
                  •
                  •
```

The table below lists the column labels shown in the above excerpt and descriptions of what these fields represent. Other than the TMSTMP column, these column headings pertain only to the transducer timing related axle data lines in the report.

Heading	Contents of Field
TMSTMP	The timestamp of a recorded event in milliseconds after train detection.
Car	The car number as determined by the firmware.
Axle	The axle number.
Trk	The truck number. Each railroad vehicle has two or more trucks (that is, wheel assemblies). The trucks are numbered, starting with 0, and increasing from the beginning of the train to the end. Each axle record is associated with one of these trucks. The axles are assigned the number of the truck with which they've been associated. These assigned truck numbers appear in this field. If the Hotwheel option on the Equipment Settings menu is enabled, this field doesn't appear.
ON	The number of milliseconds a bearing was scanned.
OFF	The number of milliseconds between axles (when no axle was between the gating transducers).
PW1	The recorded width of the pulse generated by gating transducer TO1. There is no fixed value for the pulse widths. Slower trains generate wider pulse widths (that is, they generate larger values) than faster-moving trains.
PW2	The recorded width of the pulse generated by gating transducer TO2. There is no fixed value for the pulse widths. Slower trains generate wider pulse widths (that is, they generate larger values) than faster-moving trains.

The AEI Diagnostic report has one line of data for every AEI tag associated with each car. See highlighted data line in the example below.

```
                •
                •
                •
Dir=S, Len=65, Ant1Window=00000|03347
03077      1    1   27  3069  18 18
03155      2    1   27   49  18 18
03232      3    1   27   49  18 18
03312   *CSXT   729 side=L trk=1 len=73 axls=6 S|L|0|4 hs0= 4 hs1=18 flags=211
rcvdTS=03364|03365|05164 QCnt=0

03671    CSXT   729 side=R trk=2 len=73 axls=6 S|L|0|4 hs0= 4 hs1=18 flags=124
rcvdTS=03814|03964|05164 QCnt=0
03682      4    2   27  422  18 18
03759      5    2   27   49  18 18
03836      6    2   27   49  18 18
03907 CarEnd=  1, flags=6, Ant0Window=03605|03907
                •
                •
                •
```

The table below defines the relevant fields in the AEI tag portion of car data.

Field Value	Field Definition
03312	Timestamp of tag read.
CSXT 729	AEI vehicle identification
side=L	Left side of car
trk=1	Truck 1 of car.
len=73	Car length of 73 feet.
axls=6	Six axle car.
S|L|0|4	**S** - Represents the tag's Data Format Code. **L** Represents the Equipment Group Code (L = locomotive). **0** is the Platform Code. **4** is the Tag Type.
hs0= 4	Handshakes on antenna-0 equal four.
hs1=18	Handshakes on antenna-1 equal eighteen.
flags=211	For diagnostic purposes.
rcvdTS=03364|03365|05164	Timestamps related to the internal processing of a tag upon receipt from the tag reader module.
QCnt=0	Reflects the status of an internal data queue at the time that the tag was received by the NG2 from the tag reader module.

To produce an AEI Diagnostic report:

1. Using the serial interface, display the Main menu.

   Section 4.0 - Serial Interface tells how to display the Main menu. The Main menu looks like this.

```
              .
              .
              .
  [G] - Train DSRs
  [H] - AEI Diagnostic
  [I] - Setup
  [J] - Event log
              .
              .
              .
```

2. Select **AEI Diagnostic**.

   This prompt appears.

```
  Enter Train Number:
```

3. Type the train number.

   If you typed a three-digit invalid train number, the Main menu reappears. If you typed a three-digit valid train number, a report for that train is produced. The last line of the report reads: "END OF REPORT - Press any key..."

4. If you typed fewer than four digits, press **[Enter]**.

   This prompt appears.

```
  Print raw tag data? (y/n)
```

5. To exit the serial interface and return the SmartScanNG² system to normal operation, type **X**.

6.11 Event Log Report

The Event Log report is used for diagnostics. As certain system events occur, entries are posted into the event log. Each time an entry is made into this log, it receives an event number, the date and time that the event was recorded, and an event description.

The entries are stored in a section of SRAM that can hold up to 300 separate entries. Each time an event is recorded that exceeds this maximum, the new one overwrites the oldest recorded event. The entries are saved during a power outage but can be deleted with the Clear Event Log option on the System Functions menu. Producing the report at this time produces a "No Events" message. If events have been recorded and not cleared, they're listed in chronological order, beginning with the most recently recorded event.

Below is a sample of part of an Event Log report. The contents of your report will be different. The date/time at the top of the report is the system date/time at the time the report was generated. Each line of text (that is, each event) contains these fields.

- The sequential number assigned to the event as it was generated
- The date at which the event was recorded (date is in dd/mm/yy format)
- The time at which the event was recorded (time is in 24-hour hh:mm:ss format, where 8 a.m. is 08:00:00, noon is 12:00:00, 8 p.m. is 20:00:00, and midnight is 00:00:00)
- The event description

```
Log: /FLASH/SYSTEM/logs/EVENTLOG.txt
---------
[12/30/2022 15:02:21] (55) - Velocity: Stopping Velocity task
[12/30/2022 15:02:21] (55) - Velocity: Serial port set to [Disabled]
[12/30/2022 15:02:19] (55) - Setup password entry: Success
[12/30/2022 15:01:12] (55) - Searching for Velocity
[12/30/2022 15:01:12] (55) - Velocity: Serial port set to COM3
[12/30/2022 15:01:11] (55) - Setup password entry: Success
[12/30/2022 09:40:27] (55) - Admin logged in: id-28, telnet ip-10.14.22.65
[12/30/2022 09:31:31] (47) - Analyzer: Analyzer booted up
[12/30/2022 09:30:55] (58) - Comm Startup
[12/30/2022 09:30:55] (58) - Reset cause: Reset line
[12/30/2022 09:25:57] (61) - Velocity: Stopping Velocity task
[12/30/2022 09:25:57] (61) - Velocity: Serial port set to [Disabled]
[11/01/2022 07:08:54] (47) - Train Canceled: Axls=0, TO1=0, TO2=0, Noise1=0,  Noise2=0
[11/01/2022 07:08:44] (47) - Train Arrival
[11/01/2022 07:08:31] (47) - Analyzer: Analyzer booted up
[11/01/2022 07:08:14] (53) - Searching for Velocity
[11/01/2022 07:08:02] (58) - Comm Startup
[11/01/2022 07:08:02] (58) - Reset cause: Software
[11/01/2022 08:07:36] (53) - Rebooting for update
[11/01/2022 08:07:35] (53) - System Update successful
[11/01/2022 08:07:10] (62) - Processor update complete
                •
                •
                •
```

To produce an Event Log report:

1. Using the serial interface, display the Main menu.

   Section 4.0 - Serial Interface tells how to display the Main menu. The Main menu looks like this.

```
                 .
                 .
                 .

   [J] - Event Log
   [K] - System Functions Menu
   [L] - Replay Train
   [M] - Security Menu
   [X] – Exit
```

2. Select the **Event Log**.

3. To exit the serial interface and return the SmartScanNG² system to normal operation, type **X**.

7.0 Radio Announcements

Currently, the two ways of reporting defects are:

- Announcements made via the road channel
- Reports, which may be printed to provide detailed defect information

This section describes radio announcements. The prior section describes reports.

Radio announcements consist of a set of predefined spoken messages, with each message triggered by a particular event or set of events. The message formats and announcement criteria are covered below.

Each SmartScanNG² system has a priority level assigned to it based on the setting of the Track Number submenu. Associated with these priorities are two timers, as shown below.

Track Designator	Priority	Holdoff
Single	1	30 sec
Main 1	1	30 sec
Main 2	2	30 sec
Main 3	3	30 sec
North	4	30 sec
East	4	30 sec
South	5	30 sec
West	5	30 sec
Middle	6	30 sec

Holdoff is the maximum amount of time a given SmartScanNG² system delays broadcasting a message while waiting for the holdoff input to clear. If this timeout period expires and the holdoff input remains active, the detector will broadcast its pending message anyway.

Anytime a message needs to be announced, the expanded holdoff logic kicks in, and the process is as follows:

1 Start the Broadcast Delay timer and wait until it expires.

The Holdoff line is enabled when the road channel is busy.

2 Check the Holdoff line.

3 If the Holdoff line is free, announce your messages and skip the remaining steps.

4 If the Holdoff line is currently in use, start the Holdoff timer and begin monitoring the Holdoff line.

5 If the Holdoff line becomes free (that is, if the Holdoff line frees up before the Holdoff timer expires) and remains free for 15 seconds, return to step **1**.

6 If the Holdoff timer expires (that is, if the Holdoff timer expires without the Holdoff line ever becoming free), announce your messages.

Regardless of Holdoff line activity, a one-second pause precedes the start of all announcements.

NOTE: In the examples that follow, the sample message "*Iowa Interstate*" is announced because it was enabled using the **Announce Customer Name option** on the Messages menu.

Section 4.0 - Serial Interface tells how to enable and disable this message.

7.1 Arrival Messages

The arrival message is used to announce train arrival at the site. This message is optional. It is enabled or disabled using the **Announce Train Arrival option** on the Messages menu. The format of this announcement is:

```
Iowa Interstate Milepost (mile) [track indicator]
```

At a double-track site, "track indicator" represents the position in the message text that the track designator (such as "East Track") is inserted into the announcements. At a single-track site, no message text is inserted for the track indicator.

For example, at a single-track site, the announcement is like this. In this example, milepost 359.4 was used.

```
Iowa Interstate
Milepost 3-5-9 Point 4
```

At a double-track site, the announcement is like this. In this example, milepost 297.1 was used.

```
Iowa Interstate
Milepost 2-9-7 Point 1
South Track
```

The arrival message is only announced once per train.

7.2 Real-Time Messages

Real-time messages consist of announcements that occur as the train passes over the site. No matter what kind of defect was detected, there is only one format for this announcement, and it is:

```
Iowa Interstate Milepost (mile) [track indicator] You Have a Defect
```

For example, at a single-track site, the announcement is like this. In this example, milepost 321.4 was used.

```
Iowa Interstate
Milepost 3-2-1 Point 4
You Have a Defect
```

At a double-track site, the announcement is like this. In this example, milepost 5472.9 was used.

```
Iowa Interstate
Milepost 5-4-7-2 Point 9
South Track
You Have a Defect
```

No matter how many defects are found, the real-time message is only announced once per train.

7.3 Post-Train Messages

Post-train (that is, end-of-train) announcements are given after the train has left the site and all the recorded train data has been processed by the SmartScanNG² system.

These messages consist of four distinct scenarios, each with its own spoken message. The scenarios are:

- Exception Alarms <u>not</u> detected and Integrity Failures <u>not</u> detected
- Exception Alarms <u>not</u> detected and Integrity Failures detected
- Exception Alarms detected and Integrity Failures <u>not</u> detected
- Exception Alarms detected and Integrity Failures detected

Exception Alarms are associated with axles. When the **Clearance Mode option** on the Messages menu is set to <u>separate</u>, there are eight Exception Alarms. They are the Absolute, Carside Slope, Differential, Dragging-Equipment, **High-Load**, Hotwheel, Pyrometer Saturation, and **Wide-Load** alarms. When the **Clearance Mode option** is set to <u>multiplexed</u>, there are seven Exception Alarms. They are the Absolute, Carside Slope, Differential, Dragging-Equipment, **High-Wide**, Hotwheel, and Pyrometer Saturation alarms.

The four types of Hotbox alarms are Absolute alarms, Differential alarms, Pyrometer Saturation alarms, and Carside Slope alarms. When one of these four alarms occurs, a Hotbox alarm is announced. The system only announces Dragging-Equipment, High-Load, High-Wide, Hotbox, Hotwheel, and Wide-Load.

Integrity Failures are the Dead Battery, Dead Resistor, Dead Wheel Scanner Resistor, Stuck Dragger During Train Passage, Stuck Dragger Pretrain, Stuck High-Load Detector Pretrain, Stuck Wide-Load Detector Pretrain, Successive Cold Rails Exceeded, Successive Cold Resistors Exceeded, Successive Cold Wheel Resistors Exceeded, Successive Cold Wheels Exceeded, Train Present on Restart, and sometimes Highrange Transducer Miscounts alarms.

Below is the Messages Settings menu. The options on this submenu affect the phrases broadcast to a passing train or are used to modify the parameters associated with the rebroadcast function.

```
Messages Settings
----------------------------------------
[A] - Axles ........................ YES
[B] - Speed ........................ NO
[C] - Temperature .................. YES
[D] - Length ....................... NO
[E] - Slow ......................... YES
[F] - Power Off .................... YES
[G] - Repeat No Defects ............ YES
[H] - Cars Count ................... NO
[I] - Customer Name ................ YES
[J] - Arrival Message .............. YES
[K] - Lft/Rt Alarm Ref ............. YES
[L] - Car ID With Alarm ............ NO
[M] - Request EOT Timer ............ 10
[N] - Rebroad DTMF Code ............
[O] - Announce Cold Rail ........... YES
[P] - Num EOT Repeats ............... 0
[Q] - EOT Repeat Delay ............. 15
[X] – Exit
```

Enabling one or more of these options generates the ancillary messages: A (axle count), B (train speed), C (site ambient temperature), D (train length), E (slow train), F (power off), and H (number of cars). The other options of the Messages menu aren't used to generate ancillary messages.

In the examples that follow, not all ancillary messages are shown. This is because only axle count and train speed were enabled. Site ambient temperature, train length, number of cars, power off, and slow train were disabled. ***Section 4.0 - Serial Interface*** tells how to enable and disable these messages using the Messages menu of the Setup menu.

When the Highrange Transducer Miscounts alarm or Very Slow Train alarm occurs, the system won't announce axle count, train speed, train length, or number of cars (even if these messages are enabled).

7.3.1 Nothing Detected

When neither an Exception Alarm nor an Integrity Failure is detected, the no-defect message is announced. The format of this announcement is:

If the **Repeat No Defects option** on the Messages menu is disabled, the format of this announcement is:

```
Iowa Interstate Milepost (mile) [track indicator] [speed indicator]
No Defects
[other ancillary messages] Detector Out
```

If the **Repeat No Defects option** is enabled, the format of this announcement is:

```
Iowa Interstate Milepost (mile) [track indicator] [speed indicator]
No Defects
Repeat No Defects [other ancillary messages] Detector Out
```

For example, at a single-track site when the **Repeat No Defects option** is disabled, the announcement is like this.

```
Iowa Interstate
Milepost 3-2-1 Point 4
Speed 4-5
No Defects
Total Axles 9-8
Detector Out
```

At a double-track site, when the **Repeat No Defects option** is enabled, the announcement is like this.

```
Iowa Interstate
Milepost 3-9-9 Point 1
South Track
Speed 5-3
No Defects
Repeat No Defects
Total Axles 1-4-2
Detector Out
```

7.3.2 Only an Integrity Failure Detected

Integrity failures are caused when the system determines that a condition exists that could prevent proper scanning of a train. They indicate an unusual operating condition that may require maintenance. Integrity failures appear in the header of Train Detail reports and Exception Detail reports. ***Appendix B - Integrity Failures*** describes the conditions and events that the SmartScanNG² system flags as Integrity Failures.

When no Exception Alarms are detected, but an Integrity Failure is detected, only Integrity Failure is announced. When no pretrain auxiliary alarm is detected, the format of this announcement is:

```
Iowa Interstate Milepost (mile) [track indicator] [ancillary
messages] Not Working Detector Out
```

For example, at a double-track site, the announcement is like this.

```
Iowa Interstate
Milepost 2-4-6 Point 8
South Track
Speed 5-3
Total Axles 9-2
Not Working
Detector Out
```

When no Exception Alarms are detected, but an Integrity Failure is detected, only Integrity Failure is announced. When a pretrain auxiliary alarm is detected, the format of this announcement is:

```
Iowa Interstate Milepost (mile) [track indicator] [ancillary
messages] Not Working
  (a pause)
Iowa Interstate Milepost (mile) [track indicator] [ancillary
messages] Not Working Detector Out
```

For example, at a double-track site, the announcement is like this.

```
Iowa Interstate
Milepost 2-4-6 Point 8
South Track
Speed 5-3
Total Axles 9-2
Not Working
  (a pause)
Iowa Interstate
Milepost 2-4-6 Point 8
South Track
Speed 5-3
Total Axles 9-2
Not Working
Detector Out
```

7.3.3 Only Exception Alarms Detected

When one or more Exception Alarms are detected and an Integrity Failure isn't detected, the alarms are announced. The format of this announcement is:

```
Iowa Interstate Milepost (mile) [track indicator] [speed indicator]
[alarm announcements] [other ancillary messages] [excessive-alarms
indicator]
  (a pause)
Iowa Interstate Milepost (mile) [track indicator] [speed indicator]
[alarm announcements] [other ancillary messages] [excessive-alarms
indicator] Detector Out
```

Per train, only the first four Hotbox alarms and the first four Hotwheel alarms are ever announced. Per train, only the first eight alarms are announced. When Excessive Alarms is announced, the train had more than four Hotbox alarms, more than four Hotwheel alarms, or more than eight Exception Alarms.

Hotwheel alarms use the same general format as Hotbox alarms. High-Load, High-Wide, and Wide-Load alarms use the same general format as Dragging-Equipment alarms.

The **Clearance Type option** on the Equipment Settings (Advanced) submenu is either tripwire or light beam. This option is only used for high-load detectors and wide-load detectors. Both high-load detectors and wide-load detectors must be either trip-wire detectors or light-beam detectors.

When a wide-load detector is configured for tripwire operation, the system only records one Wide-Load alarm, regardless of the wide-load signal status. This is because you can only break a wire once.

When it is configured for light-beam operation, the system records every Wide-Load alarm that occurs. However, the system won't flag Wide-Load alarms on consecutive axles. At least one unalarmed axle must separate the alarmed axles. Regardless of the number of detected Wide-Load alarms, the system only announces a maximum of two.

When a high-load detector is configured for tripwire operation, the system only records one High-Load alarm, regardless of the high-load signal status. This is because you can only break a wire once.

When it is configured for light-beam operation, the system records every High-Load alarm that occurs. However, the system won't flag High-Load alarms on consecutive axles. At least one unalarmed axle must separate the alarmed axles. Regardless of the number of detected High-Load alarms, the system only announces a maximum of two.

The **Clearance Mode option** on the Equipment Settings (Advanced) submenu is either separate or multiplexed. This option is only used for high-load detectors and wide-load detectors. When this option is set to separate, the alarms coming from the high-load detectors are announced as High-Load alarms, and the alarms coming from the wide-load detectors are announced as Wide-Load alarms. When this option is set to multiplexed, the alarms coming from the high-load detectors and wide-load detectors are announced as High-Wide alarms.

The **Announce Car Identification option** on the Messages menu shows whether car-identification information is to be announced (YES) or not announced (NO). When this option is set to YES, and an Exception Alarm is found on a car, the car-identification information is announced right after the Exception Alarm is announced. This, of course, will only happen if the **AEI option** on the Equipment Settings menu is enabled (YES) and the AEI subsystem is functioning properly during train passage. In the examples that follow, the Announce Car Identification option was set to NO.

The **Announce Left-Right Alarm Reference option** on the Messages menu shows whether the alarm reference is announced as left or right (YES) or north, south, east, or west (NO). In the examples that follow, this option was set to NO.

For example, at a single-track site having one Hotbox alarm and no Integrity Failure, the announcement is like this.

```
Iowa Interstate
Milepost 3-2-1 Point 4
Speed 4-5
Hotbox North-Rail Axle-7-5
Total Axles 9-8
  (a pause)
Iowa Interstate
Milepost 3-2-1 Point 4
Speed 4-5
Hotbox North-Rail Axle-7-5
Total Axles 9-8
Detector Out
```

At a double-track site having one Dragging-Equipment alarm and no Integrity Failure, the announcement is like this.

```
Iowa Interstate
Milepost 3-9-9 Point 1
South Track
Speed 4-5
Dragging-Equipment Near-Axle-8-4
Total Axles 8-8
  (a pause)
Iowa Interstate
Milepost 3-9-9 Point 1
South Track
Speed 4-5
Dragging-Equipment Near-Axle-8-4
Total Axles 8-8
Detector Out
```

At a single-track site having two Hotbox alarms and no Integrity Failure, the announcement is like this.

```
Iowa Interstate
Milepost 3-2-1 Point 4
Speed 4-5
First-Hotbox North-Rail Axle-7-5
Second-Hotbox North-Rail Axle-8-0
Total Axles 9-0
  (a pause)
Iowa Interstate
Milepost 3-2-1 Point 4
Speed 4-5
First-Hotbox North-Rail Axle-7-5
Second-Hotbox North-Rail Axle-8-0
Total Axles 9-0
Detector Out
```

The post-train announcement for a detected Hotwheel alarm uses the same general format: "First-Hotwheel North-Rail Axle-7-5."

At a single-track site having two Dragging-Equipment alarms and no Integrity Failure, the announcement is like this.

```
Iowa Interstate
Milepost 3-2-1 Point 4
Speed 5-7
First-Dragging-Equipment Near-Axle-8-4
Second-Dragging-Equipment Near-Axle-8-8
Total Axles 9-8
  (a pause)
Iowa Interstate
Milepost 3-2-1 Point 4
Speed 5-7
First-Dragging-Equipment Near-Axle-8-4
Second-Dragging-Equipment Near-Axle-8-8
Total Axles 9-8
Detector Out
```

At a single-track site having one Hotbox² alarm, one Dragging-Equipment alarm, and no Integrity Failure, the announcement is like this.

```
Iowa Interstate
Milepost 3-2-1 Point 4
Speed 4-5
Hotbox North-Rail Axle-7-5
Dragging-Equipment Near-Axle-8-4
Total Axles 9-8
  (a pause)
Iowa Interstate
Milepost 3-2-1 Point 4
Speed 4-5
Hotbox North-Rail Axle-7-5
Dragging-Equipment Near-Axle-8-4
Total Axles 9-8
Detector Out
```

At a single-track site having three or more Dragging-Equipment alarms and no Integrity Failure, the announcement is like this.

```
Iowa Interstate
Milepost 3-2-1 Point 4
Speed 4-5
First-Dragging-Equipment Near-Axle-1-2
Second-Dragging-Equipment Near-Axle-1-4
Total Axles 9-8
Excessive Alarms
  (a pause)
Iowa Interstate
Milepost 3-2-1 Point 4
Speed 4-5
First-Dragging-Equipment Near-Axle-1-2
Second-Dragging-Equipment Near-Axle-1-4
Total Axles 9-8
Excessive Alarms
Detector Out
```

Per train, only the first two Dragging-Equipment alarms are ever announced. Per train, only the first four Hotbox alarms or Hotwheel alarms are ever announced.

7.3.4 Both Exception Alarms and an Integrity Failure Detected

When one or more alarm conditions and an Integrity Failure are detected, both are announced. The format of this announcement is:

```
Iowa Interstate Milepost (mile) [track indicator] [speed indicator]
[alarm announcements] [ancillary messages] Not Working
[excessive-alarms indicator]
  (a pause)
Iowa Interstate Milepost (mile) [track indicator] [speed indicator]
[alarm announcements] [ancillary messages] Not Working
[excessive-alarms indicator] Detector Out
```

In the examples that follow, the **Announce Car Identification option** and the **Announce Left-Right Alarm Reference option** were set to NO.

For example, at a single-track site having one Hotbox alarm and an Integrity Failure, the announcement is like this.

```
Iowa Interstate
Milepost 3-2-1 Point 4
Speed 6-0
Hotbox South-Rail Axle-7-5
Total Axles 9-8
Not Working
  (a pause)
Iowa Interstate
Milepost 3-2-1 Point 4
Speed 6-0
Hotbox South-Rail Axle-7-5
Total Axles 9-8
Not Working
Detector Out
```

At a double-track site having one Dragging-Equipment alarm and an Integrity Failure, the announcement is like this.

```
Iowa Interstate
Milepost 3-8-8 Point 1
North Track
Speed 5-7
Dragging-Equipment Near-Axle-2-4
Total Axles 8-6
Not Working
  (a pause)
Iowa Interstate
Milepost 3-8-8 Point 1
North Track
Speed 5-7
Dragging-Equipment Near-Axle-2-4
Total Axles 8-6
Not Working
Detector Out
```

At a single-track site having three or more Dragging-Equipment alarms and an Integrity Failure, the announcement is like this.

```
Iowa Interstate
Milepost 3-2-1 Point 4
Speed 4-5
First-Dragging-Equipment Near-Axle-1-2
Second-Dragging-Equipment Near-Axle-1-4
Total Axles 9er-8
Not working
Excessive Alarms
  (a pause)
Iowa Interstate
Milepost 3-2-1 Point 4
Speed 4-5
First-Dragging-Equipment Near-Axle-1-2
Second-Dragging-Equipment Near-Axle-1-4
Total Axles 9er-8
Not working
Excessive Alarms
Detector Out
```

At a single-track site having one Hotbox alarm, six Dragging-Equipment alarms, and an Integrity Failure, the announcement is like this.

```
Iowa Interstate
Milepost 3-2-1 Point 4
Speed 5-4
First-Dragging-Equipment Near-Axle-2-8
Second-Dragging-Equipment Near-Axle-2-9er
Hotbox North-Rail-7-5
Total Axles 1-0-8
Not working
Excessive Alarms
  (a pause)
Iowa Interstate
Milepost 3-2-1 Point 4
Speed 5-4
First-Dragging-Equipment Near-Axle-2-8
Second-Dragging-Equipment Near-Axle-2-9er
Hotbox North-Rail-7-5
Total Axles 1-0-8
Not working
Excessive Alarms
Detector Out
```

7.3.5 Wild Detector Co-Located

When the SmartScanNG² is co-located with a WILD Detector:

- The “WILD Detector Co-Located” option (on the Equipment/Advanced menu) must be set to “Yes”:
- “HBD Detector” will be included in the preface for all broadcast messages.
- When an alarm has been detected, the resultant real-time broadcast message changes from "You have a defect" to “You have an HBD defect.”
-
- EOT broadcasts will be delayed by the number of seconds specified in the new configuration option Post-Train Broadcast Delay

For example, at a single-track site having one Hotbox alarm and no Integrity Failure, the EOT announcement is like this.

```
Iowa Interstate
HBD Detector
Milepost 3-2-1 Point 4
Speed 4-5

Hotbox North-Rail Axle-7-5
Total Axles 9er-8
  (a pause)
Iowa Interstate
HBD Detector
Milepost 3-2-1 Point 4
Speed 4-5

Hotbox North-Rail Axle-7-5
Total Axles 9-8
Detector Out
```

8.0 Scheduled Maintenance

This section lists the items that STC recommends be done during scheduled maintenance.

An up-and-running SmartScanNG² system needs to be visited from time to time to do scheduled maintenance. The frequency of these visits is up to the customer. STC recommends visits every 30 to 90 days. Maintenance requirements change with environmental conditions. For example, if the system is installed in a damp or dusty environment, it may be necessary to visit the location more frequently to clean the optics. The optical system is the item most likely to need periodic maintenance. If moisture or dust isn't a problem, you may not need to do scheduled maintenance more often than every 90 days.

For normal scheduled maintenance, STC recommends these steps.

1 Be sure that you have on hand a 50-foot (15-meter) or longer tape measure, a #2 Phillips head screwdriver, a small slotted screwdriver, a 9/16-inch torque wrench, a laptop computer, a multimeter, and the alignment fixture.

2 At trackside, check track conditions on all tracks.

3 If any track is pumping (vertical displacement of the rails) or running (lateral displacement of the rails) more than 2 inches (5 centimeters), have it repaired before proceeding.

4 At trackside, check for damaged transducers, damaged transducer cables, and other damaged components.

5 If you find any damaged components, repair or replace them before proceeding.

STC transducers don't require a lot of care and attention. Once installed correctly, you don't need to remove them from the rail for cleaning or readjustment.

6 At trackside, check all transducer-mounting bolts on all tracks to make sure that all transducers are snug against the rail.

Four bolts are needed to hold the transducer in place. Two square-head bolts go through the mounting plate and transducer body. Two hex-head bolts go through the mounting plate and rail. If any of these bolts are sheared or missing, they must be replaced with the correct replacement bolt. Also, if any washers or nuts are missing, they must be replaced.

7 If all transducers aren't snug against the rail, fix this problem before proceeding.

Each installed transducer body should be 1-9/16 inches (3.97 centimeters) below the top of the rail and parallel to it. You can meet this requirement by using the transducer height bracket on the bottom of the alignment fixture.

8 Place the alignment fixture across both rails, centered over each transducer in turn.

9 Check if each transducer body just touches the bracket.

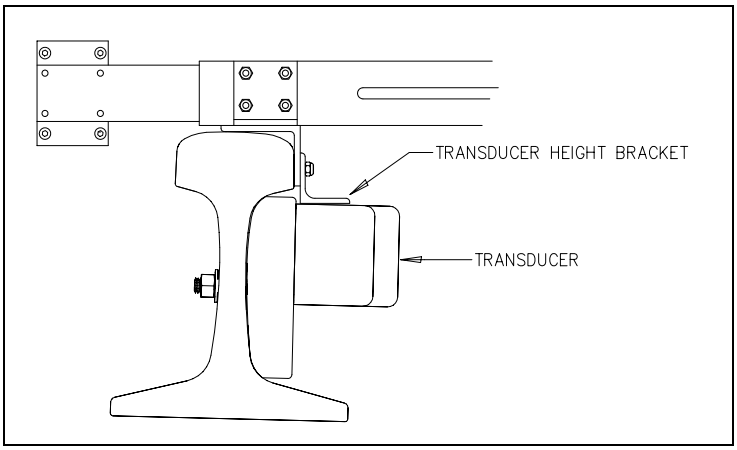

The fixture should be snug against the top and gauge of both rails. This may be impossible if the transducer body is less than 1-9/16 inches (3.97 centimeters) below the top of the rail or if the transducer body isn't parallel to the top of the rail.

10 If a transducer body doesn't just touch the bracket:

- **a** Loosen the nuts holding the transducer body to its mounting plate.
- **b** By sliding it up and down, adjust the transducer body to the proper height.
- **c** Tighten each hex nut with a 9/16-inch torque wrench to a **torque of 12 to 15 foot-pounds (16.3 to 20.3 newton-meters)**.

Don't exceed a torque of 15 foot-pounds (20.3 newton-meters). Doing so can weaken or break a bolt, requiring the bolt to be replaced.

11 At the trackside, check all scanner-mounting bolts on all tracks.

12 If all scanner mounts aren't snug against the gauge side of the rail, fix this problem before proceeding.

13 From under all scanners, remove ballast that could damage the scanner during train passage.

14 Remove all obstructions to the scan path of each scanner.

15 If the wayside enclosure isn't attached to a properly installed outside grounding system, fix this problem before proceeding.

16 At all outlets inside the wayside enclosure, check if the AC power is stable and at least 110 volts at 20 amperes.

17 If the AC power isn't stable or if it isn't at least 110 volts at 20 amperes, fix this problem before proceeding.

18 If not all outlets inside the wayside enclosure are grounded properly, fix this problem before proceeding.

19 If the battery is dead, damaged, or emitting a strong sulfurous odor, replace it before proceeding.

> **WARNING**
> In operation, batteries generate and release flammable hydrogen gas, which, if ignited by a burning cigarette, naked flame, or spark, may cause a battery explosion with a dispersion of casing fragments and corrosive liquid electrolyte. So, carefully follow the manufacturer's instructions for installation and service. Keep all sources of gas ignition away from the batteries, and do not allow metallic articles to contact the negative and positive terminals of a battery at the same time.

> **WARNING**
> A damaged or aged battery, in combination with the connected battery charger, can pose a serious health threat. The battery can produce hydrogen sulfide gas, which is characterized by its unique "rotten egg" smell. So, when a strong sulfurous odor is detected, remove power to the battery charger and check the battery for excessive heating. Do not inhale the fumes.

20 If the battery charger hasn't been properly grounded, fix this problem before proceeding.

21 If the SmartScanNG² enclosure hasn't been properly grounded, fix this problem before proceeding.

There are vents on the top, bottom, and sides of the charger. Blocking any of these vents could result in damage to the charger or battery.

22 Remove anything that is blocking the vents on the battery charger.

One end of the battery temperature probe cable has a three-pin plug, which plugs into a receptacle on the front of the battery charger. The other end, which has a temperature sensor sealed in it, should be attached to the negative battery post. If the battery temperature probe is defective or not installed, the defective LED (red) is lit.

23 On the front of the battery charger, if the red defective-temperature-probe LED is lit, fix the underlying problem before proceeding.

24 Switch the multimeter to the DC volts scale.

The **equipment side** of the fuse block is directly wired to the SmartScanNG² enclosure. The **battery side** of the fuse block is wired to the battery via the distribution block.

25 Touch the leads from the multimeter to the terminals on the equipment side of the fuse block.

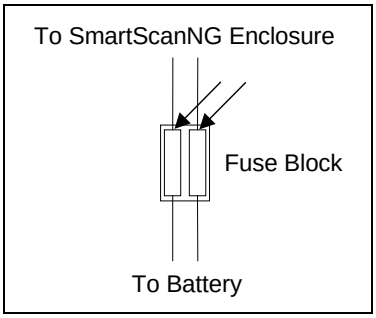

26 If the voltage (on the equipment side of the fuse block) is 12.3 through 14 VDC, go to step **30**.

27 If the voltage (on the equipment side of the fuse block) is 0 VDC:

- **a** Touch the leads to the terminals on the battery side of the fuse block.
- **b** If the voltage (on the battery side of the fuse block) is greater than 0 VDC, replace each fuse in the fuse block with a BAF-25 (25-amp 250-volt) fast-acting fuse and return to step **25**.
- **c** If the voltage (on the battery side of the fuse block) is 0 VDC, fix any wiring problems between the fuse block, the distribution block, the battery, and the charger.
- **d** Return to step **25**.

28 If the voltage is less than 12.3 VDC:

- **a** On the battery charger, check the input voltage switch for the proper setting.

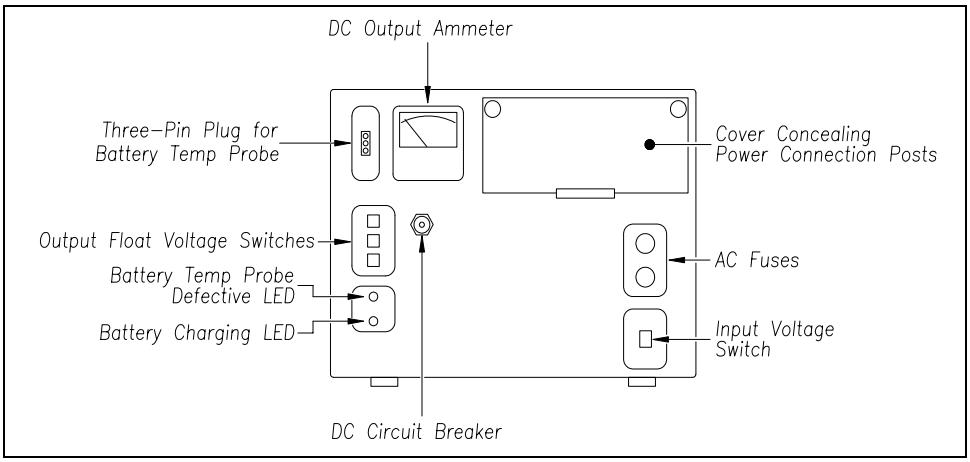

The input voltage switch can be set to 115 VAC or 230 VAC. Use 115 for input voltages between 108 and 128. Use 230 for input voltages between 216 and 256.

- **b** On the battery charger, check the output float voltage switches.
- **c** If the switches are set lower than 12.30 VDC, reset them to 14.00 VDC.

  To reset the switches, use a small slotted screwdriver to turn each switch to the desired number. The ten's digit is always 1 and can't be changed. The top switch controls the unit's digit. The middle switch controls the tenth's digit. The bottom switch controls the hundredth's digit. The factory default is **14.00 VDC**, which is the **recommended setting**. To select 14.00 VDC, turn the top switch to 4, the middle switch to 0, and the bottom switch to 0.

d Open the small door cover on the top-right corner of the front of the charger.

Do not touch the uninsulated parts of the wires or the charger's binding posts. Doing so could result in sparks, burns, or electric shock.

e Check that all binding posts nuts are tight and that all wiring is correct.

f On the battery charger, check the AC fuses to see if either is blown.

g If blown, replace with 4-amp 250-volt fast-acting fuses.

h On the battery charger, check the DC circuit breaker to see if it is open (tripped).

When closed, about 0.09 inch (0.23 centimeters) of the breaker's button is seen. When open, the button is popped out, showing about 0.25 inch (0.64 centimeters).

i If open (tripped), push the breaker's button in to reset the DC circuit breaker.

j Check to see if the battery charger is plugged in.

k If the battery charger isn't plugged in, plug it in.

l Check the battery-charging LED.

If the battery is charging properly, the yellow battery-charging LED is lit solid. If one or more of the output float voltage switches are set between numbers, the yellow battery-charging LED flashes.

m If the yellow battery-charging LED is not lit, call STC for help in fixing this problem.

n If the yellow battery-charging LED is lit solid, monitor the voltage for ten minutes.

If the voltage is gradually increasing, the battery is probably charging. After the battery has been charged for five hours, the battery voltage should be very near the float voltage setting. If the voltage isn't gradually increasing, the battery is probably not charging. This may indicate that the battery is defective and should be replaced.

29 If the voltage is greater than 14 VDC:

a Check the output float voltage switches on the center-left edge of the battery charger.

b Be sure that each switch is set on a number and not between numbers.

c If the switches are set to 14.00 VDC or less, cut all power to the SmartScanNG² system and call STC for help in fixing this problem.

d If the switches are set higher than 14.00 VDC, reset them to 14.00 VDC and return to step **25**.

To reset the switches, use a small slotted screwdriver to turn each switch to the desired number. The ten's digit is always 1 and can't be changed. The top switch controls the unit's digit. The middle switch controls the tenth's digit. The bottom switch controls the hundredth's digit. The factory default is **14.00 VDC**, which is the **recommended setting**. To select 14.00 VDC, turn the top switch to 4, the middle switch to 0, and the bottom switch to 0.

30 On the display panel, look at the COP-A and COP-B LEDs.

The COP LEDs indicate the condition of the CPUs. If both CPUs are running their programs correctly, their LEDs blink on and off. If a program isn't operating as expected, the LED for the affected CPU is lit solid or isn't lit at all.

31 If either or both of the **COP LEDs** are lit solid or aren't lit at all, call STC for help in fixing this problem.

32 On the display panel, look at the **SYS WARN** LED. If a system warning has been flagged, the SYS WARN LED will be lit, and the Check System Health message will be displayed on the bottom text line of the home screen. The Sys. Health Menu provides a status indicator for the various system health checks.

33 To see if the system is being activated by the gating transducers:

a Produce a Train Detail Report for the last train.

Section 4.0 - Producing Reports tells how to produce this report.

b On the Train Detail report, check under the System Alarms section of the report for the words "No Approach Track."

The No Approach Track alarm indicates that the track circuit (or the advance transducers) failed to signal the presence of a train and that the SmartScanNG² system started from the train passing over the gating transducers.

c If the words "No Approach Track" don't appear, go to step **37**.

34 If your system uses advance transducers, go to step **36**.

35 If your system uses a track circuit:

a) From the center of the gating transducers, measure the distance you want the track circuit to pick up the presence of a train.

b) The distance must be at least 50’ (15.24 m) and no more than 150’ (45.7 m).

c) At the point just measured, place a 0.06Ω shunt across both rails. The track must be shunted before the calibration switch is pressed.

d) Press and HOLD the Calibration Switch until the SOTC LED starts blinking. Release the switch, and the LED will stop blinking. The ZEPIC III will automatically begin the calibration process. NOTE: The track shunt MUST remain in place during the calibration process.

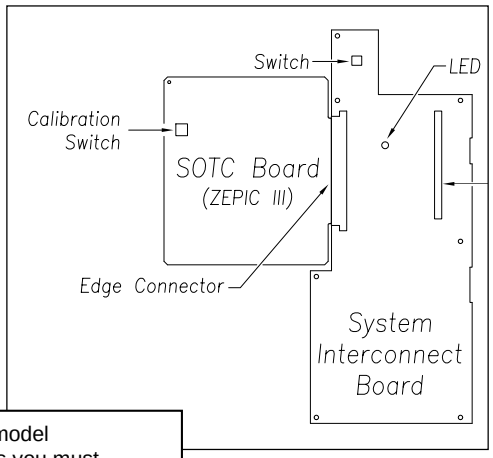

NOTE: For the older model SmartScanNG Chassis you must remove the Controller Module to access the Calibration Switch on the Zepic III board.

e)

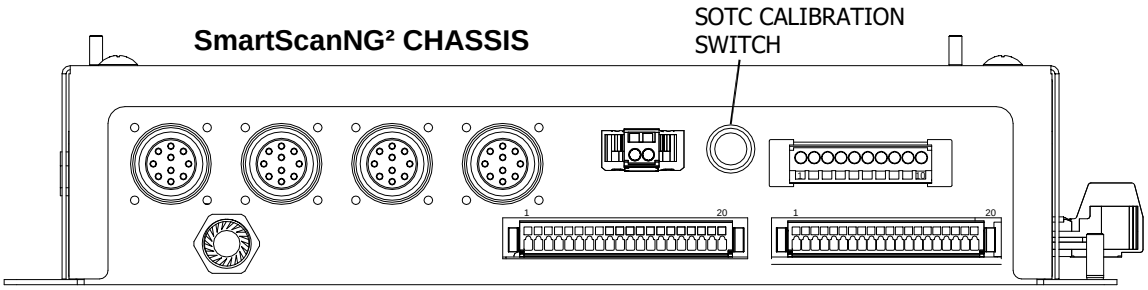

f) The relay drive will pick up (SOTC LED on) when the unit has successfully calibrated. This process can take up to 45 seconds to complete.

Verification

a) After calibration, lift the shunt, and the relay drive should drop (LED off). Replace the shunt, and the relay drive will pick up (LED on).

b) Move the shunt approximately 10’ farther out from the calibration point. The relay drive should not pick up (LED stays off). If this test fails, perform Short Track Calibration (detailed below).

c) The PD8-Plus is now operating properly and will activate at an equal distance on either side of the track feed point.

d) After trackside calibration procedures have been successfully completed, place a temporary shunt across the track wires inside the bungalow and verify that the signal system goes to stop. Once verified, remove the temporary shunt.

> **IMPORTANT:** To ensure an accurate activation point, always place the shunt BEFORE pressing the Calibration Switch.
>
> If the PD8-Plus cannot achieve calibration, it will blink the relay drive LED three (3) times in rapid succession, indicating a calibration error. The unit will continuously repeat the calibration procedure (there is no need to press the Calibration Switch), allowing you to troubleshoot the track circuit, wiring, and battery. Once the issue has been corrected, repeat the calibration procedure.
>
> Both the ZEPIC III and Zepic PD8-Plus have a two-wire track circuit and will activate an equal distance on both sides of the track feed point.

PD8-Plus Short-Track Circuit Calibration

a) The system may fail the 10 ft calibration verification step noted above if the installation is using 26KHz and the desired CAL point is ~30ft from the feed points (Short track circuit), and the bungalow is near the track (short track wires).

b) If this is the case, reconfigure the PD8-Plus to a lower frequency that is compatible with other equipment that may be on the track. In general, changing from 26KHz to 20KHz or 17.5KHz should solve the short-track circuit calibration issue.

c) Once the module has been reconfigured for the new operating frequency, repeat the normal calibration procedure detailed above.

PD8-Plus Troubleshooting and Application Notes

a) If the unit will not calibrate, watch the relay drive LED for approx 45 seconds. If it blinks, this means the PD8-Plus has turned its receiver gain to the maximum setting and cannot see the track shunt. Look for open circuits between the PD8-Plus and the shunt on the track. I.e., track wires, bond wires, etc.

b) The PD8-Plus will look equally in both directions. If one side of the circuit has insulated joints, the PD8-Plus will operate. However, the activation distance will not be the same. In general, track circuit equipment cannot see past insulated joints.

c) Audio overlay systems like the PD8-Plus will not work with wideband shunts in their track circuit range.

d) If the relay drive is stuck ON, look for short circuits between the PD8-Plus and the desired pick point.

e) The greater the distance between the PD8-Plus and track connections, the greater the effects ballast will have on the PD8-Plus performance.

f) Presence output is a dry contact configuration Form –C dry contact, 225mA max current. (N.O. contact with no train presence)

g) In good track ballast conditions, a PD8-Plus circuit can travel up to 500 ft in each direction. Rotating operating frequencies to avoid interference with other equipment is recommended.

h) The higher the operating frequency, the shorter the track circuit.

i) Go to step **37.**

36 If your system uses advance transducers:

You will next verify that each advance transducer is functional.

a Using a metal wrench, stroke the top of one of the advance transducers.

The scanner shutters should open completely for 10 seconds.

b On one of the bearing scanners, check to see if the shutter opens.

c If the shutter didn't open, fix this problem before proceeding.

d Using a metal wrench, stroke the top of the other advance transducer.

The scanner shutters should open completely for 10 seconds.

e On one of the bearing scanners, check to see if the shutter opens.

f If the shutter didn't open, fix this problem before proceeding.

37 Produce a Train Summary report.

Section 4.0 - Producing Reports tells how to produce this report.

The Train Summary report lists all trains currently stored in the Trains directory. A line of information is shown for each train entry. The report is divided into a header section and a detail section. The header section contains general information about the site. The detail section contains summary information on each train that passed the site.

38 On the Train Summary report, check the Axles column.

The axle count should be an even number. Odd-numbered axle counts are possible indications of gating transducer problems.

39 If there is an odd axle count and if the train speed is always above 7 mph, go to step **41**.

If at any time during train passage, the train speed was less than or equal to 7 mph (11.3 kph), gating transducer problems probably don't exist. If the train speed was always above 7 mph, gating transducer problems probably do exist.

The Very Slow Train alarm indicates that at some point during train passage, four consecutive axles crossed the gating transducers at a speed of 7 mph (11.3 kph) or less. This alarm appears on a Train Detail report.

If there are many slow trains (that is, many trains traveling less than 7 mph) at this site, it may be necessary to relocate the scanners and other track hardware to a better location. Deciding to do this should be made in consultation with STC. Relocating a site is beyond the scope of this document.

40 If there is an <u>even</u> axle count <u>and</u> the values under "Axles," "T01," and "TO2" are the same, go to step **45**.

If things are working correctly, all three values for a given train should be equal. You'll do the next step <u>only</u> if things aren't working correctly.

41 Determine which gating transducer is recording incorrect information.

Determine which gating transducer is recording incorrect axle counts <u>and</u> whether it is not counting all axles or counting extra ones. You may not be able to do this by just looking at the values under the Axles, T01, and TO2 columns of the Train Summary report. Sometimes, a transducer problem causes the number in the Axles column to be incorrect. Therefore, the true axle count may have to be determined from an alternate source, such as the next detector system that encounters the train with the transducer-count imbalance.

After you determine which gating transducer is miscounting, you'll need to change a jumper setting on the Interface board. If TO1 is the problem, you'll change the setting for J201. If TO2 is the problem, you'll change the setting for J202. If both TO1 and T02 have a problem, both jumpers will need to be changed.

Changes to the jumpers should be made <u>only</u> after all external conditions that cause transducer miscounts have been corrected. Some of these external conditions are improperly installed transducers, loose transducer bolts, incorrect transducer heights, damaged transducers, damaged transducer cables, and loose wiring connections. You should have already checked and corrected for these external conditions in steps **4** through **10** above. If you think the corrections you made in those steps fix gating transducer miscounting, you can skip some of the steps below.

The process of adjusting the transducer loading is trial and error. Generally, if you are having too many transducer counts, lower the loading resistance to make the transducer less sensitive. Likewise, too few counts suggest that the transducer is not sensitive enough, so you would select a loading value with more resistance.

42 If you corrected all external conditions that negatively affect gating transducers <u>and</u> you think this fixes gating transducer miscounting, go to step **45**.

43 If the selected gating transducer appears to be <u>missing</u> <u>axles</u> (that is, the transducer that is showing a number of hits less than the true axle count):

a Toggle <u>off</u> the DC power switch on the right edge of the SmartScanNG² enclosure.

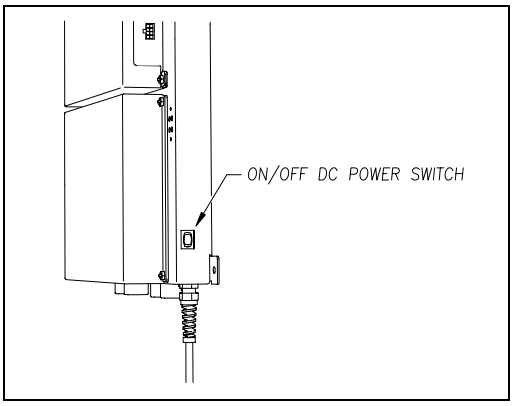

b Remove the six nuts and three screws holding the cover over the Interface board.

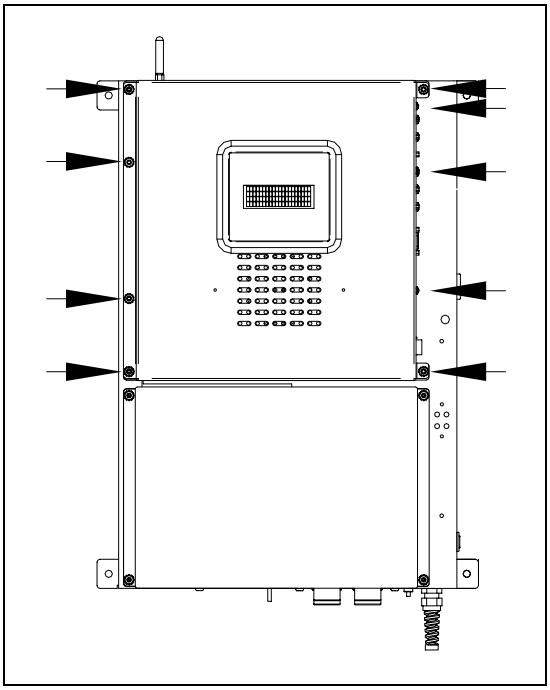

The Interface board is now visible.

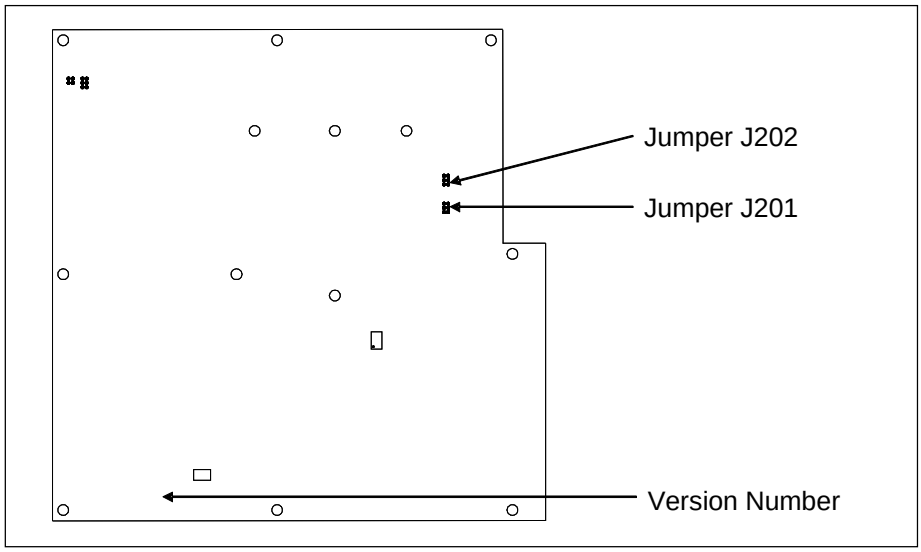

c To prevent the base assembly from falling, replace two of the just removed nuts onto the top two mounting studs on the SmartScanNG² enclosure.

d Store the removed cover, three screws, and remaining four nuts in a safe place until you replace them.

The available loading sensitivities vary depending on which version of Interface board you have <u>and</u> whether resistors are attached to the jumpers or not. The version number is printed on the lower-left edge of the board.

e The table below lists the highest, middle, and lowest sensitivity for transducer loading. Highest is the most sensitive. The jumper's top position is the one closest to the external speaker.

J201 or J202 Jumper Position	**Sensitivity Level**
Top	Lowest Sensitivity
Center	Middle Sensitivity
Bottom	Highest Sensitivity

f If TO1 is the selected gating transducer and the J201 jumper is currently on the lowest sensitivity position, move it to the middle sensitivity position.

g If TO1 is the selected gating transducer and the J201 jumper is currently on the middle sensitivity position, move it to the highest sensitivity position.

h If TO1 is the selected gating transducer and the J201 jumper is currently on the highest sensitivity position, call STC for help in fixing this problem.

i If TO2 is the selected gating transducer and the J202 jumper is currently on the lowest sensitivity position, move it to the middle sensitivity position.

j If TO2 is the selected gating transducer and the J202 jumper is currently on the middle sensitivity position, move it to the highest sensitivity position.

k If TO2 is the selected gating transducer and the J202 jumper is currently on the highest sensitivity position, call STC for help in fixing this problem.

l Remove the two nuts holding the base assembly to the SmartScanNG² enclosure.

m Using the saved six nuts and three screws, reattach the cover over the Interface board.

n Toggle on the DC power switch on the right edge of the SmartScanNG² enclosure.

44 If the selected gating transducer appears to be counting extra axles (that is, the transducer that is showing a number of hits more than the true axle count):

a Toggle off the DC power switch on the right edge of the SmartScanNG² enclosure.

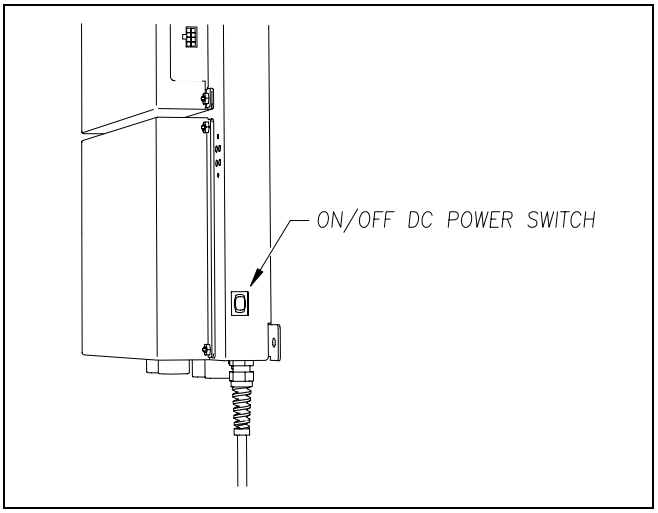

b Remove the six nuts and three screws holding the cover over the Interface board.

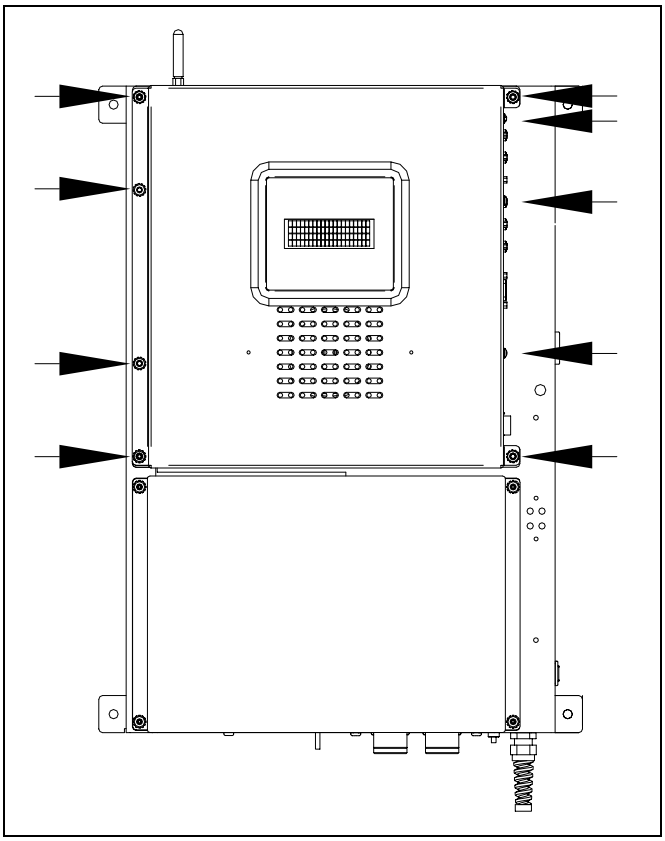

The Interface board is now visible.

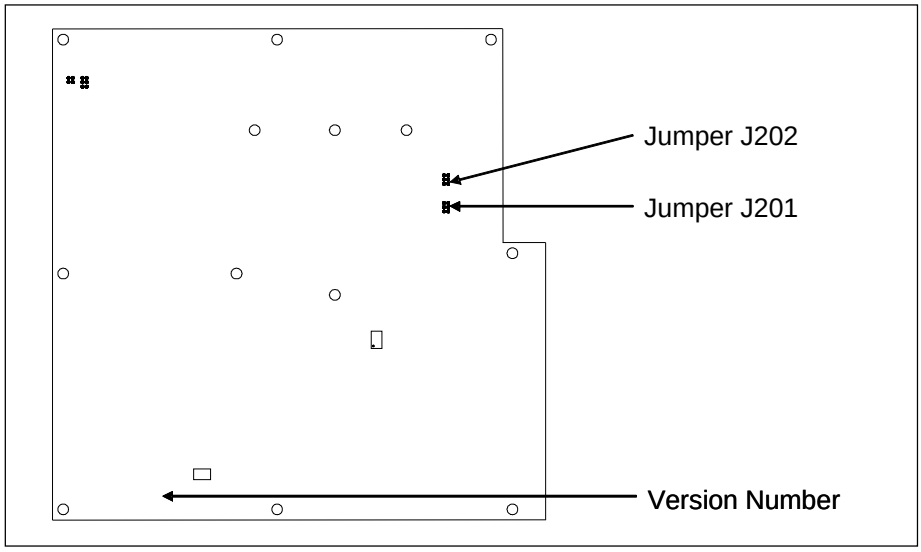

c To prevent the base assembly from falling, replace two of the just removed nuts onto the top two mounting studs on the SmartScanNG² enclosure.

d Store the removed cover, three screws, and the remaining four nuts in a safe place until you replace them.

The available loading sensitivities vary depending on which version of the Interface board you have and whether resistors are attached to the jumpers or not. The version number is printed on the lower-left edge of the board.

e The table below lists the highest, middle, and lowest sensitivity for transducer loading. The highest is the most sensitive. The jumper's top position is the one closest to the external speaker.

J201 or J202 Jumper Position	**Sensitivity Level**
Top	Lowest Sensitivity
Center	Middle Sensitivity
Bottom	Highest Sensitivity

f If TO1 is the selected gating transducer and the J201 jumper is currently on the highest sensitivity position, move it to the middle sensitivity position.

g If TO1 is the selected gating transducer and the J201 jumper is currently on the middle sensitivity position, move it to the lowest sensitivity position.

h If TO1 is the selected gating transducer and the J201 jumper is currently on the lowest sensitivity position, call STC for help in fixing this problem.

i If TO2 is the selected gating transducer and the J202 jumper is currently on the highest sensitivity position, move it to the middle sensitivity position.

j If TO2 is the selected gating transducer and the J202 jumper is currently on the middle sensitivity position, move it to the lowest sensitivity position.

k If TO2 is the selected gating transducer and the J202 jumper is currently on the lowest sensitivity position, call STC for help in fixing this problem.

l Remove the two nuts holding the base assembly to the SmartScanNG² enclosure.

m Using the saved six nuts and three screws, reattach the cover over the Interface board.

n Toggle on the DC power switch on the right edge of the SmartScanNG² enclosure.

45 To use the serial interface to open the scanner shutters:

a Using the serial interface, display the Main menu.

Section 4.0 - Serial Interface tells how to display the Main menu

b Select the System Functions Menu

```
System Functions Menu
----------------------------------------
[A] - Radio Test
[B] - Vocabulary Test
[C] - Radio Inhibit
[D] - Start Manual Train
[E] - 1KHz Test Tone
[F] - Auto-Calibration
[G] - Remote System RESET
[H] - Delete All Stored Train Data
[I] - Clear Event Log
                  .
                  .
                  .
```

c To open the shutters, select the Auto-Calibration option.

The protective shutters in all scanners should open and stay open for three minutes. This might not be enough time to check and clean the shutters and optics. If that isn't enough time, select this option again.

46 In each scanner, check if its shutter opened.

47 If any shutter didn't open, fix this problem before proceeding.

48 In each scanner, check for dirty optics.

49 If dirty, clean the scanner optics with the supplied lens cleaning kit.

Do not use solvents, ammonia-based cleaning solutions, or isopropyl alcohol on the optics. Use clean water or a mild solution of dishwashing liquid. After the liquid on the optics dries, lightly wipe the optics with a clean, dry chamois patch.

50 If the date and time displayed on the top of the System Functions menu are incorrect, fix them before proceeding.

Section 4.0 - Serial Interface tells how to change the date and time.

51 To check the operation of the radio:

a From the System Functions menu, select Radio Test.

During a radio test, the SmartScanNG² system outputs phrases through the speaker and through the radio. Alternatively, you can output a 1kHz test tone instead of phrases. To do this, you would select the 1KHz Test Tone option.

b While listening to the message or tone, look at the display panel.

The PTT LED should be lit.

If this LED isn't lit, the system's ability to send a message or tone to the radio might be inhibited. This can happen when one uses the Radio Inhibit option on the System Functions menu. If the radio is inhibited, the results of this check are invalid.

c If the PTT LED isn't lit and the radio isn't inhibited, call STC for help in fixing this problem.

52 To check the integrity of the speech data:

a Be sure that the speaker has its volume set to an audible level.

b Using the serial interface, display the Main menu.

Section 4.0 - Serial Interface tells how to display the Main menu.

```
              •
              •
              •
   [J] - Event log
   [K] - System Functions Menu
   [L] - Replay train
   [M] - Security Menu
   [X] - Exit
```

c Select the System Functions menu.

```
System Functions Menu
----------------------------------------
[A] - Radio Test
[B] - Vocabulary Test
[C] - Radio Inhibit
[D] - Start Manual Train
              •
              •
              •
```

d From the System Functions menu, select Vocabulary Test

This message appears.

```
Starting Vocabulary Test
```

If the system isn't currently making any other voice announcements, it begins the Vocabulary Test announcement. The SmartScanNG² system outputs phrases through the speaker but not through the radio. After the announcement finishes, the System Functions menu reappears.

If the system is currently making a voice announcement, the firmware begins the Vocabulary Test after all previously-queued announcements finish.

e If you hear nothing or speech that is too **e** If you hear nothing or speech that is too garbled to understand, call STC for help in fixing this problem.

53 To generate a test train to check the number of axles:

a Quickly stroke the top of each gating transducer with a metal wrench, alternating between TO1 and TO2.

b Repeat step **a** nine more times for a total of **ten** simulated axles.

c Wait for the system to time out and the shutters to close.

d Produce a Train Detail report for the last train.

Section 4.0 - Producing Reports tells how to produce this report.

e On the report, check that the number of axles agrees with the number of times that you stroked the gating transducers.

f On the report, if the number of axles doesn't agree with the number of times that you stroked the gating transducers, call STC for help in fixing this problem.

54 To generate a test train to check hot bearings:

STC recommends that you use the calibrated heat source (2100-810NG) only when the outside (ambient) temperature is above 0°F (-18°C) and below 90°F (32°C). If you must use it at other times, do so only when the needle is centered on the front of the temperature meter. If the needle isn't stabilized within ± 2-degrees of the setpoint, the heat source isn't operating properly.

a Ready the calibrated heat source.

The heat source has reached operating temperature and stabilized when the temperature meter needle remains centered.

b With the power cord to the front of the scanner, place the calibrated heat source on the bearing scanner that is on the rail with the gating transducers.

c Quickly stroke the top of each gating transducer with a metal wrench, alternating between TO1 and TO2 for a total of **six** simulated axles.

You should hear the real-time defect message. No matter how many defects are found, the real-time defect message is only announced once.

d Wait for the system to time out, which normally takes about 10 seconds.

You should hear an end-of-train message with three Hotbox alarms. Per train, only the first three Hotbox alarms are ever announced.

e Listen to be sure that the Hotbox alarms are announced and that they are announced for the correct side.

If you do not hear anything, no alarm-level heat was recorded. No measurable heat from a bearing scanner may be due to loose connections, a scanner not being connected to the bottom of the SmartScanNG² enclosure, a defective shutter motor in the scanner, or a damaged scanner.

f If you do not hear any Hotbox alarms being announced, fix this problem before proceeding.

g If the Hotbox alarms are announced for the wrong side, switch the bearing scanner connections on the bottom of the SmartScanNG² enclosure.

h Repeat the test, this time placing the calibrated heat source on the bearing scanner on the opposite rail.

i Verify the results as before.

If the results are correct, your system should function properly when scanning the bearings of real trains.

j Remove the calibrated heat source.

k Store the calibrated heat source and its cable in the wayside enclosure.

55 On the Train Summary report, check the column marked "Average."

For each train, the values in the two columns under this heading should be within four degrees of each other.

56 If the columns aren't within four degrees and if the scanner optics are clean, recalibrate and realign the scanner.

Appendix F & G - Calibration of Type2/Type3 Scanners tells how to calibrate the scanners.

57 On the Train Summary report, check the last column of the report.

The last column shows the battery voltage at the time each train passed the site. It should show values between 13.0 and 14.5 volts. Values outside this range may be caused by:

- No AC power for an extended period
- Improperly adjusted float voltage
- Defective battery
- Blown fuses
- Defective battery charger

58 If the most recent value isn't between 13.0 and 14.5 volts, investigate and fix any problems before proceeding.

59 If this is a double-track site, repeat steps **18** through **59** for the other track (that is, for the other SmartScanNG² system).

9.0 Customer Service

At STC, the customer is number one. STC is committed to products that work and customers that are satisfied. Nothing less is acceptable. This section tells how to get answers for questions, fixes for problems, and parts for spares.

9.1 Reaching STC

You can reach STC by mail, telephone, fax, and email. By mail, you can reach STC at:

Southern Technologies Corporation
6145 Preservation Drive
Chattanooga, Tennessee 37416-3638
USA

Mail and shipments are replied to as soon as possible, normally within one working day. Equipment repair usually takes longer.

By telephone, you can reach STC at 423-892-3029, Monday through Friday, from 8:00 a.m. until 5:00 p.m. Eastern time. After business hours, a machine answers the calls. These calls are returned promptly the next business day. By fax, you can reach STC at 423-499-0045. The fax machine can receive faxes at all times. Faxes are replied to as soon as possible, normally within one working day. By email, you can reach STC at email@southern-tech.com. Email is replied to as soon as possible, normally within one working day.

9.2 Returning Equipment for Repair

Return any defective or malfunctioning equipment to STC for repair or replacement. You don't need a return authorization number. You don't even need to make a telephone call first. Just ship it directly to the **Repair Department** at the address above.

With the returned equipment, include:

- Complete address of where the equipment is to be returned.
- Name and telephone number of the person who should be contacted to answer questions about the equipment.
- A written explanation of the equipment defect or malfunction.
- Any reports or other data that would be helpful in diagnosing the problem.
- If out of warranty, credit card number (to be charged) with its expiration date.

9.3 Reporting Problems or Suggestions

If you have any problems, suggestions, or questions related to STC equipment, telephone the **Engineering Department** at the telephone number above. When calling, state the equipment you're calling about. Your call will then be directed to the right person.

9.4 Ordering Spare Parts

If you need any spare parts to support STC equipment, telephone or fax the **Sales Department** at the telephone numbers above.

When calling, state that you're calling to order parts. Your call will then be directed to the right person. When placing the order, reference the STC part numbers listed in this guide. However, if you don't have the part numbers, the sales staff can obtain them for you and provide you with current pricing and availability.

When faxing, include:

- Purchase Order Number for the order <u>or</u> credit card number (to be charged) with its expiration date.
- Complete address where the parts are to be shipped.
- Complete address where the invoice is to be mailed.
- Name and telephone number of the person who should be contacted to answer questions about the order.
- Your fax number, if available.
- For each item ordered, part number, complete description, and quantity needed.

9.5 Checking on Shipments and Orders

If you need to check on the status of any shipment or order, telephone or fax the **Sales Department** at the telephone numbers above.

When calling, state that you're checking the status of a shipment or order. Your call will then be directed to the right person. Have your Purchase Order Number ready when you call. However, if you don't have the order number, the sales staff can locate your order number and provide you with the status of the shipment or order.

When faxing, include:

- Purchase Order Number for the shipment or order being checked.
- Name and telephone number of the person who should be contacted after the order status is checked.
- Your fax number, if available.

Appendix A
System Alarms

This appendix describes the conditions and events that the SmartScanNG² system flags as System Alarms. These alarms provide data about passing trains and system status. These alarms are listed under the System Alarms section of the Train Detail and Exception Detail reports. ***Section 4.0 - Producing Reports*** tells how to produce these reports.

A.1 Cold Rail Alarm

The Cold Rail alarm indicates that the temperatures of all bearings (of the train) on the designated rail were below a given temperature. When no bearing on a given rail generates a delta temperature reading greater than or equal to the temperature set by the **Cold Rail Temperature option** on the Alarm Settings menu, the system generates a Cold Rail alarm. ***Section 4.0 - Serial Interface*** tells how to view or change the Cold Rail Temperature option.

```
Alarm Settings
----------------------------------------
[A] - Absolute ..................... 200
[B] - Warm ......................... 170
[C] - Differential ................. 115
[D] - Hot Wheel .................... 702
[E] - Cold Rails ..................... 2
[F] - Cold Rail Temp ................ 10
[G] - Cold Res Counter ............... 3
[H] - Differential Enabled ......... Yes
[I] - Advanced
[X] – Exit
```

There is a different Cold Rail alarm for each rail. That is, there is a Cold North Rail alarm and a Cold South Rail alarm (or, depending on track direction, a Cold East Rail alarm and a Cold West Rail alarm).

The maximum number of consecutive trains, all having Cold Rail alarms on the same railside, needed to generate a Successive Cold Rails Exceeded alarm is set by the **Cold Rails option** on the Alarm Settings menu. If the number of consecutive trains bearing Cold Rail alarms equals or exceeds the cold-rail-alarm limit, the Integrity Failures section of the Train Detail and Exception Detail report displays the message "Successive Cold Rails Exceeded." Successive Cold Rails Exceeded alarms are covered in the next appendix. ***Section 4.0 - Serial Interface*** tells how to view or change the Cold Rails option.

```
                    •
                    •
                    •
  [D] - Hot Wheel ..................... 702
  [E] - Cold Rails ..................... 2
  [F] - Cold Rail Temp ................ 10
  [G] - Cold Res Counter ............... 3
  [H] - Differential Enabled ......... Yes
  [I] - Advanced
  [X] – Exit
```

A.2 Cold Resistor Alarm

A resistor is mounted to the inside of the bearing scanner's shutter. A voltage is applied to this resistor while the shutter is open, causing it to heat up. After a train has left a site and the shutters have closed, the temperature of the resistor is read by the scanner pyrometer. In this way, a check of the system's ability to read heat correctly is made. The Cold Resistor alarm indicates that the minimum value expected for the temperature of the resistor wasn't met. This minimum value is determined by the firmware and is dependent upon the time it takes a train to pass a site.

If the **minimum value** wasn't met, a second check compares the recorded resistor temperature against the limit that was established using the Absolute option on the Alarm Settings menu. (This alarm limit is an offset, in degrees Fahrenheit, above the ambient temperature.) If the recorded resistor temperature meets or exceeds the absolute-alarm limit, the firmware cancels any previously flagged Cold Resistor alarms. ***Section 4.0 - Serial Interface*** tells how to view or change the Absolute option.

```
 Alarm Settings
 ----------------------------------------
  [A] - Absolute ..................... 200
  [B] - Warm ......................... 170
  [C] - Differential ................. 115
                    •
                    •
                    •
```

There is a different Cold Resistor alarm for each rail. That is, there is a Cold North Resistor alarm and a Cold South Resistor alarm (or, depending on track direction, a Cold East Resistor alarm and a Cold West Resistor alarm).

The **maximum number** (per railside) of consecutive trains, having Cold Resistor alarms, allowed before generating a Successive Cold Resistors Exceeded alarm is set by the **Cold Resistor Counter option** on the Alarm Settings menu. Successive Cold Resistors Exceeded alarms are covered in the next appendix. ***Section 4.0 - Serial Interface*** tells how to view or change the Cold Resistor Counter option.

```
                 .
                 .
[D] - Hot Wheel ..................... 702
[E] - Cold Rails ..................... 2
[F] - Cold Rail Temp ................ 10
[G] - Cold Res Counter ............... 3
[H] - Differential Enabled ......... Yes
                 .
                 .
                 .
```

A.3 Cold Wheel Scanner Resistor Alarm

The Cold Wheel Scanner Resistor alarm represents the wheel scanner's equivalent of the bearing scanner's Cold Resistor alarm. Evaluation of Cold Wheel Scanner Resistor alarm occurs in two stages. The first stage mimics the same logic used in the evaluation of Cold Resistor alarms. After finishing this check, and possibly flagging a Cold Wheel Scanner Resistor alarm, the firmware compares the recorded resistor temperature against a value of one-third the hot wheel alarm limit. If the recorded resistor temperature meets or exceeds this value, the firmware cancels any previously flagged Cold Wheel Scanner Resistor alarm. In this way, the system confirms the scanner's ability to read alarm level heat. Just like Cold Resistor alarms, separate Cold Wheel Scanner Resistor alarms exist for each railside.

The maximum number (per railside) of consecutive trains, having Cold Wheel Scanner Resistor alarms, allowed before generating a Successive Cold Wheel Resistors Exceeded alarm is set by the Cold Rails option on the Alarm Settings menu. Successive Cold Wheel Resistors Exceeded alarms are covered in the next appendix. ***Section 4.0 - Serial Interface*** tells how to view or change the Cold Rails option.

```
                    .
                    .
                    .

[D] - Hot Wheel ..................... 702
[E] - Cold Rails ..................... 2
[F] - Cold Rail Temp ................ 10
[G] - Cold Res Counter ............... 3
[H] - Differential Enabled ......... Yes
                    .
                    .
                    .
```

A.4 Highrange Transducer Miscounts Alarm

The Highrange Transducer Miscounts alarm indicates that the transducer counts for TO1 and TO2 are off by at least the count set by the Highrange Transducer Miscount option on the Alarm Settings (Advanced) menu. ***Section 4.0 - Serial Interface*** tells how to view or change the Highrange Transducer Miscount option. This calculation is made after each axle crosses both gating transducers. When this alarm occurs, the system won't announce axle count, exit speed, length of train, and total number of cars (even if these messages are enabled).

The Highrange Transducer Miscounts alarm can be either a System Alarm or an Integrity Failure, depending on the presence of a Very Slow Train alarm. If a highrange transducer miscount occurs on a train that also contains a Very Slow Train alarm, the firmware treats the miscount condition as a System Alarm. This logic assumes that the train's slow rate of travel likely caused the transducer miscount condition. If a highrange transducer miscount occurs on a train traveling faster than 7 mph (11.3 kph), the firmware treats the miscount condition as an Integrity Failure.

A.5 Integrity Failure Alarm

The Integrity Failure alarm indicates that the SmartScanNG² system determined that a condition exists that could prevent proper scanning of a train. In other words, this alarm indicates the existence of one or more conditions in which the integrity of the system, and its ability accurately to record train data, may be compromised. These unusual conditions, called Integrity Failures, may require train stoppage, later maintenance, or both. They are covered in the next appendix.

A.6 Low Battery Alarm

The Low Battery alarm indicates a float voltage of at least 11.8 volts, but less than 12.6 volts, on the standby battery.

A.7 Midrange Transducer Miscounts Alarm

The Midrange Transducer Miscounts alarm indicates that the transducer counts for TO1 and TO2 are off by at least five but less than the count set by the Highrange Transducer Miscount option on the Alarm Settings (Advanced) menu. ***Section 4.0 - Serial Interface*** tells how to view or change the Highrange Transducer Miscount option.

A.8 No Approach Track Alarm

The No Approach Track alarm indicates that the track circuit (or the advance transducers) failed to signal the presence of a train and that the SmartScanNG² system started from the train passing over the gating transducers.

NOTE: This alarm is suppressed if the Presence Hardware is set to “No” in Equipment Setup Menu.

A.9 Pyrometer Noise-Filtered Rail Alarm

The Pyrometer Noise Filtered Rail alarm indicates that a pyrometer in a bearing scanner might be becoming unreliable. This alarm isn't considered an Integrity Failure and therefore won't result in “Not Working” being part of the post-train announcement.

There is a different Pyrometer Noise Filtered Rail alarm for each rail. That is, there is a Pyrometer Noise Filtered North Rail alarm and a Pyrometer Noise Filtered South Rail alarm (or, depending on track direction, a Pyrometer Noise Filtered East Rail alarm and a Pyrometer Noise Filtered West Rail alarm).

A.10 Pyrometer Noise-Filtered Wheel Alarm

The Pyrometer Noise Filtered Wheel alarm indicates that a pyrometer in a wheel scanner might be becoming unreliable. This alarm isn't considered an Integrity Failure and, therefore, won't result in “Not Working” being part of the post-train announcement.

There is a different Pyrometer Noise Filtered Wheel alarm for each rail. That is, there is a Pyrometer Noise Filtered North Wheel alarm and a Pyrometer Noise Filtered South Wheel alarm (or, depending on track direction, a Pyrometer Noise Filtered East Wheel alarm and a Pyrometer Noise Filtered West Wheel alarm).

A.11 Reverse Direction Detected

Trains that are being scanned correctly will have axles whose on times are less than their off times. For each axle of a passing train (except for the first axle), the system checks for an on-time that is greater than the off-time. If the axle's on time is greater than its off time, the system reverses the direction locked-in by the first gating pulse, reverses the opening and closing gate assignment for TO1 and TO2, and generates a false transducer pulse. The system considers the gate active for the next axle at the time it determines the current axle's opening gate pulse was missed.

The Reverse Direction Detected alarm indicates that the system entered a state where it is scanning for bearing temperatures when the axles are outside the scanning gate. In this state, the transducer that should be opening the scanning gate is considered by the system to be the transducer that is closing the gate. Likewise, the transducer that should be closing the scanning gate is considered the transducer that is opening the gate.

A.12 Short Train Alarm

The Short Train alarm indicates that a train had fewer than 50 axles.

A.13 Stuck Dragger Recovered Alarm

The Stuck Dragger Recovered alarm indicates that a stuck dragger was detected during train passage, and at some point later, the dragging-equipment detector returned to its neutral position. After returning to its neutral position, the firmware must scan at least eight consecutive Dragger-free axles before flagging this condition again.

A.14 Test Train Alarm

The Test Train alarm indicates that a given train was generated by the SmartScanNG² system. These trains are used for testing purposes and do not represent actual trains passing the site.

A.15 Very Slow Train Alarm

The Very Slow Train alarm indicates that, at some point during train passage, four consecutive axles crossed the gating transducers at a speed of 7 mph (11.3 kph) or less. When this alarm occurs, the system won't announce axle count, exit speed, length of train, and total number of cars (even if these messages are enabled).

Appendix B
Integrity Failures

This appendix describes the conditions and events that the SmartScanNG² system flags as Integrity Failures. These alarms indicate conditions in which the integrity of the system, and its ability to record train data accurately, may be compromised. These alarms are listed under the System Alarms section of the Train Detail, and Exception Detail reports. ***Section 4.0 - Producing Reports*** tells how to produce these reports.

B.1 Dead Battery Alarm

The Dead Battery alarm indicates a float voltage of less than 11.8 volts on the standby battery.

B.2 Dead Resistor Alarm

The bearing scanner's Dead Resistor alarm indicates the presence of two separate conditions. First, the train must contain a Cold Rail alarm on a given rail. Second, the recorded temperature for the bearing scanner's resistor on that rail must fall below the value set by the Cold Rail Temperature option on the Alarm Settings menu. ***Section 4.0 - Serial Interface*** tells how to view or change the Cold Rail Temperature option.

```
Alarm Settings
----------------------------------------
[A] - Absolute ..................... 200
[B] - Warm ......................... 170
[C] - Differential ................. 115
[D] - Hot Wheel .................... 702
[E] - Cold Rails ..................... 2
[F] - Cold Rail Temp ............... 10
[G] - Cold Res Counter ............... 3
[H] - Differential Enabled ......... Yes
[I] - Advanced
[X] – Exit
```

There is a different Dead Resistor alarm for each rail. That is, there is a Dead North Resistor alarm and a Dead South Resistor alarm (or, depending on track direction, a Dead East Resistor alarm and a Dead West Resistor alarm).

B.3 Highrange Transducer Miscounts Alarm

The Highrange Transducer Miscounts alarm indicates that the transducer counts for TO1 and TO2 are off by at least the count set by the Highrange Transducer Miscount option on the Alarm Settings (Advanced) menu. ***Section 4.0 - Serial Interface*** tells how to view or change the Highrange Transducer Miscount option. This calculation is made after each axle crosses both gating transducers. When this alarm occurs, the system won't announce axle count, exit speed, length of train, and total number of cars (even if these messages are enabled).

The Highrange Transducer Miscounts alarm can be either a System Alarm or an Integrity Failure, depending on the presence of a Very Slow Train alarm. If a highrange transducer miscount occurs on a train that also contains a Very Slow Train alarm, the firmware treats the miscount condition as a System Alarm. This logic assumes that the train's slow rate of travel likely caused the transducer miscount condition. If a highrange transducer miscount occurs on a train traveling faster than 7 mph (11.3 kph), the firmware treats the miscount condition as an Integrity Failure.

B.4 Stuck Dragger During Train Passage Alarm

The Stuck Dragger During Train Passage alarm indicates that the preset maximum number of consecutive axles have had Dragging-Equipment alarms during train passage. The maximum number is determined by the firmware and is currently five.

B.5 Stuck Dragger Pretrain Alarm

The Stuck Dragger Pretrain alarm indicates that the dragging equipment detector was stuck before the scanners started scanning. That is, between the time of first receiving a pulse from the track circuit (or the advance transducers) and the time of first receiving a pulse from either gating transducer, the SmartScanNG² system detected an open circuit from the dragging-equipment detector.

B.6 Stuck High-Load Detector Pretrain Alarm

The Stuck High-Load Detector Pretrain alarm indicates that, before the scanners started scanning, the high-load detector was stuck. That is, between the time of first receiving a pulse from the track circuit (or the advance transducers) and the time of first receiving a pulse from either gating transducer, the SmartScanNG² system detected an open circuit from the high-load detector.

B.7 Stuck Wide-Load Detector Pretrain Alarm

The Stuck Wide-Load Detector Pretrain alarm indicates that, before the scanners started scanning, the wide-load detector was stuck. That is, between the time of first receiving a pulse from the track circuit (or the advance transducers) and the time of first receiving a pulse from either gating transducer, the SmartScanNG² system detected an open circuit from the wide-load detector.

There is a different Stuck Wide-Load Detector Pretrain alarm for each rail. That is, there is a Stuck Wide-Load Detector Pretrain North Side alarm and a Stuck Wide-Load Detector Pretrain South Side alarm (or, depending on track direction, a Stuck Wide-Load Detector Pretrain East Side alarm and a Stuck Wide-Load Detector Pretrain West Side alarm).

B.8 Successive Cold Rails Exceeded Alarm

The Successive Cold Rails Exceeded alarm indicates that at least a preset maximum number of consecutive trains, all having Cold Rail alarms on the same railside, have passed a site. The maximum number of consecutive trains having Cold Rail alarms allowed before generating this alarm is set by the Cold Rails option on the Alarm Settings menu. ***Section 4.0 - Serial Interface*** tells how to view or change the Cold Rails option.

```
                    .
                    .
                    .

  [D] - Hot Wheel ..................... 702
  [E] - Cold Rails ..................... 2
  [F] - Cold Rail Temp ................ 10
  [G] - Cold Res Counter ............... 3
  [H] - Differential Enabled ......... Yes
                    .
                    .
                    .
```

Under normal circumstances, Cold Rail conditions represent System Alarms, not Integrity Failures. However, if the number of consecutive trains bearing a Cold Rail alarm equals or exceeds the cold-rail-alarm limit, this condition becomes an Integrity Failure. If the number of consecutive trains bearing Cold Rail alarms equals or exceeds the cold-rail-alarm limit, the Integrity Failures section of the Train Detail and Exception Detail report displays the message "Successive Cold Rails Exceeded."

B.9 Successive Cold Resistors Exceeded Alarm

The Successive Cold Resistors Exceeded alarm indicates that at least a preset maximum number of consecutive trains, all having Cold Resistor alarms on the same railside, have passed a site. The maximum number (per railside) of consecutive trains having Cold Resistor alarms allowed before generating an Integrity Failure alarm is set by the Cold Rails option on the Alarm Settings menu. ***Section 4.0 - Serial Interface*** tells how to view or change the Cold Rails option.

```
                    .
                    .
                    .

[D] - Hot Wheel ..................... 702
[E] - Cold Rails ..................... 2
[F] - Cold Rail Temp ................ 10
[G] - Cold Res Counter ............... 3
[H] - Differential Enabled ......... Yes
                    .
                    .
                    .
```

Under normal circumstances, Cold Resistor conditions represent System Alarms, not Integrity Failures. However, if the number of consecutive trains bearing the same Cold Resistor alarm equals or exceeds the cold-rail-alarm limit, this condition becomes an Integrity Failure. If the number of consecutive trains bearing identical Cold Resistor alarms equals or exceeds the cold-rail-alarm limit, the System Alarms section of the Train Detail and Exception Detail reports displays the message "Successive Cold Resistors Exceeded."

B.10 Successive Cold Wheel Resistors Exceeded Alarm

The Successive Cold Wheel Resistors Exceeded alarm occurs when a specified number of consecutive trains, each containing a Cold Wheel Scanner Resistor alarm on the same railside, pass the site. The user determines the number of consecutive trains used in the comparison through the Cold Rails setup parameter. ***Section 4.0 - Serial Interface*** tells how to view or change the Cold Rails option.

```
                    .
                    .
                    .

[D] - Hot Wheel ..................... 702
[E] - Cold Rails ..................... 2
[F] - Cold Rail Temp ................ 10
[G] - Cold Res Counter ............... 3
[H] - Differential Enabled ......... Yes
                    .
                    .
                    .
```

Under normal circumstances, Cold Wheel Resistor conditions represent System Alarms, not Integrity Failures. However, if the number of consecutive trains bearing the same Cold Wheel Scanner Resistor alarm <u>equals</u> <u>or</u> <u>exceeds</u> the cold-rail-alarm limit, this condition becomes an Integrity Failure. If the number of consecutive trains bearing identical Cold Wheel Scanner Resistor alarms equals or exceeds the cold-rail-alarm limit, the System Alarms section of the Train Detail and Exception Detail reports displays the message "Successive Cold Wheel Resistors Exceeded."

B.11 Train Present on Restart Alarm

The Train Present on Restart alarm indicates that a train was present at the site when the system was powering up.

Appendix C
System Functions

This appendix lists the system functions provided by the SmartScanNG² system.

To access the system functions:

1 Using the serial interface, display the Main menu.

Section 4.0 - Serial Interface tells how to display the Main menu. The Main menu looks like this.

```
SmartSCAN NG2, MP/KP:1234.5, Track:Single
01/10/2023 13:19:23, 11.7V, 74°F
Main Menu - Comm
----------------------------------------
[A] - Train Summary
[B] - Train Detail
[C] - Exception Summary
[D] - Exception Detail
[E] - System Status Report
[F] - Last Train
[G] - Train DSRs
[H] - AEI Diagnostic
[I] - Setup
[J] - Event Log
[K] - System Functions Menu
[L] - Replay Train
[M] - Security Menu
[X] – Exit
```

2 Select System Functions menu.

The System Functions menu appears.

```
System Functions Menu
----------------------------------------
[A] - Radio Test
[B] - Vocabulary Test
[C] - Radio Inhibit
[D] - Start Manual Train
[E] - 1KHz Test Tone
[F] - Auto-Calibration
[G] - Reboot System
[H] - Delete All Stored Train Data
[I] - Clear Event Log
[J] - Update Menu
[K] - Maintenance Menu
[L] - Volume Up (3)
[M] - Volume Down (3)
[N] - Resistor Baseline Data
[O] - Radio Programming Menu
[P] - Scanner Test
[Q] - Calibrate Frauscher Transducers
[R] - Virtual Gate Test
[X] - Exit
```

C.1 Radio Test

Selection of the Radio Test option broadcasts a short message through the speaker and through the radio. Using this option lets you verify that the speaker and radio are working properly.

At single-track sites, the text of the message is "Testing, Iowa Interstate, milepost, (*milepost number*), testing, one, two, three, four, five, four, three, two, one, testing." At double-track sites, the text of the message is "Testing, Iowa Interstate, milepost, (*milepost number*), track (*track designation*), testing, one, two, three, four, five, four, three, two, one, testing."

If the "WILD Detector Co-Located" option (Equipment Settings (Advanced) menu) is set to No, "detector" does not announce ("Testing, Iowa Interstate, milepost . . ."). If the "WILD Detector Co-Located" option is set for Yes, "h b d detector" announces ("Testing, Iowa Interstate, h b d detector, milepost . . .").)

C.2 Vocabulary Test

Selection of the Vocabulary Test option enunciates all stored speech phrases. This announcement is broadcast through the speaker but not through the radio. Therefore, it isn't affected by the Radio Inhibit option being enabled.

The text of the message is "zero, one, two, three, four, five, six, seven, eight,nine, a, alarm, alarms, axle, axles, b, beginning, box, c, car, cars, critical, d, defect, defects, detector, dragging, e, east, equipment, excess, f, fifth, first, fourth, from, g, h, have, high, hot, i, ID, in, inspect, j, k, l, left, length, load, m, main, middle, milepost, minus, n, near, no, north, not, o, of, off, **beep**, out, p, point, power, q, r, rail, rebroadcast, remainder, resistor, right, s, scanner, second, a, side, sixth, slow, south, speed, system, t, temperature, test, testing, third, through, too, total, track, u, v, w, west, wheel, wide, working, x, y, you, z, repeat, excessive, train, minute, minutes, **1/4-second beep**, at, integrity failure, an, hbd, Iowa Interstate."

C.3 Radio Inhibit

Selection of the Radio Inhibit option prevents radio activation for three minutes. During this time, any announcements generated by the system are broadcast through the speaker, but not through the radio. This feature may be overridden by recalling this submenu .

Selecting this menu option toggles the label between "Radio Inhibit" and "Re-enable Radio PTT." As the label toggles, so does the operation (no need to type anything).

C.4 Start Manual Train

Selection of the Manual Train Mode option opens all the shutters and simulates transducer pulses for about one minute. During this time, a person can check various aspects of the installed components. In this mode, the system runs the ramp function without generating heats. The train is marked as a test train. There won't be any voltage applied to the scanner inputs.

The test is timed, and you cannot stop this test by pressing **[Esc]**.

C.5 1KHz Test Tone

Selection of the 1KHz Test Tone option generates a continuous tone for about 10 seconds through the speaker and the radio. Using this option lets you verify that the speaker and radio are working properly.

C.6 Auto-Calibration

Selection of the Auto-Calibration option places the system in autocalibration mode.

The SmartScanNG² system self-calibrates its pyrometer interface circuitry. You need only put a preheated calibrated heat source on a scanner and place the system in autocalibration mode. The system then scans all pyrometer inputs until the signal from the calibrated heat source is located. The necessary adjustments to the related interface circuitry are automatically made while the system monitors its own progress by analyzing changes in the heat signals. Once the procedure has been completed, autocalibration mode is disengaged, and the calibration results are displayed on your computer. For more details, see ***Appendix F & G - Calibration of Type2/Type3 Scanners***.

C.7 Remote System Reset

Selection of the Remote System Reset option forces a system reset through a remote connection. It can also be used locally.

C.8 Delete All Stored Train Data

Selection of the Delete All Stored Train Data option erases all stored train data. This encompasses all data on the trains in the Trains directory, Exceptions directory, and Test Train directory. After deleting all the train data, there isn't any way of regenerating it. The data is gone forever.

C.9 Clear Event Log

Selection of the Clear Event Log option erases all events stored in the Event Log and displayed on the Event Log report. After deleting the log, there isn't any way of regenerating it. The data is gone forever.

C.10 Update Menu

```
            •
            •
[H] - Delete All Stored Train Data
[I] - Clear Event Log
[J] - Update Menu
[K] - Maintenance Menu
            •
            •
            •
```

a Select **Update Menu** from the System Functions menu.

This prompt appears.

```
Update Menu
----------------------------------------
[A] - Select Update File
[X] - Exit
```

b Choose the **Select Update File** from the Update menu.

This prompt appears.

```
Select update file:

[A] - IAIS_01-01.ng
[B] - IAIS_01-02.ng
```

d Select the appropriate file from the menu options.

C.11 View maintenance statistics

From the System Functions Menu, select Maintenance Menu.

A prompt like this appears.

```
Maintenance Menu
----------------------------------------
[A] - View Maintenance Statistics
[B] - Reset System Health
[C] - Re-evaluate Last 40 Trains.
[D] - Maintenance Email List
[X] – Exit
```

Select the **View maintenance statistics** option to display diagnostic information for various system parameters.

Example:

```
Maintenance information gathered over 10 days
Positive numbers indicate an increase, negative indicates a decrease.
-------------------------------------------------------------------------------------------
Metric (per day)                 percent change      Weighted value    Limit   Problem
-------------------------------------------------------------------------------------------
Number of Trains                        -11            (-11.000000)         0      No
Low Miscount                              0            (  0.000000)        50      No
High Miscount                             0            (  0.000000)        50      No
Average Temperature 0                     0            (  0.000000)        50      No
Average Temperature 1                   -11            (-11.000000)        50      No
Average Temperature 2                   -44            (-44.000000)        50      No
Average Temperature 3                   -44            (-44.000000)        50      No
Cold Rail 0                              22            ( 22.000000)        50      No
Cold Rail 1                              22            ( 22.000000)        50      No
Cold Rail 2                               0            (  0.000000)        50      No
Cold Rail 3                               0            (  0.000000)        50      No
Average miscount                          0            (  0.000000)         0      No
Average voltage percentage                0            (  0.000000)         0      No
```

C.12 Reset System Health

Selection of the Reset System Health option resets system warnings and zeros all health check counts.

C.13 Maintenance email list

Selection of the Maintenance email list allows you to choose or add email addresses to be recipients of maintenance reporting.

C.14 Volume up/Volume down

Selection of the Volume up/Volume down options allows for adjustment of the speaker volume.

```
            .
            .
            .
[L] - Volume Up (3)
[M] - Volume Down (3)
[N] - Resistor Baseline Data
[O] - Radio Programming Menu
[P] - Scanner Test
[Q] - Calibrate Frauscher Transducers
[R] - Virtual Gate Test
[X] - Exit
```

There are 10 selectable volume levels (0-9). Level 0 is the minimum volume, and Level 9 is the maximum volume. The current volume setting is indicated in parentheses.

Appendix D
Replacement of Type2 Scanners

There are Type2 bearing scanners and Type2 wheel scanners. Both contain two major parts. The top part is the cover-and-module assembly. The module and its protective cover are tightly integrated and rarely should be taken apart. Except for the addition of a plastic attenuation plug on the wheel scanner cover, both types of cover-and-module assemblies are identical and can be used interchangeably. The bottom part is the mount. Bearing scanner mounts and wheel scanner mounts are different in design. They can't be interchanged.

This appendix tells how to replace the scanner cover-and-module assemblies. The replacement of scanner mounts isn't covered in this guide.

D.1 Bearing Scanners

The figure below shows the major parts of a Type2 bearing scanner.

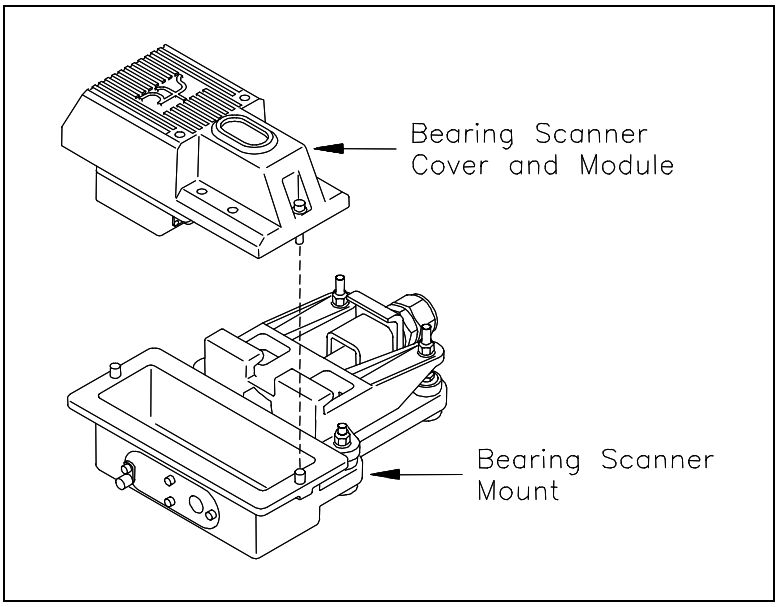

To replace a Type2 bearing scanner cover-and-module assembly:

1. Be sure that you have on hand a new scanner cover-and-module assembly.
2. Be sure that you have on hand a T-handle 1/4-inch hex-wrench.

3 Turn off all power to the SmartScanNG² enclosure.

4 Using a T-handle 1/4-inch hex-wrench, loosen both socket-head-cap screws on the cover of the bearing scanner.

5 Separate the scanner cover-and-module assembly from its mount.

6 Disconnect the scanner cable connector from the scanner box connector.

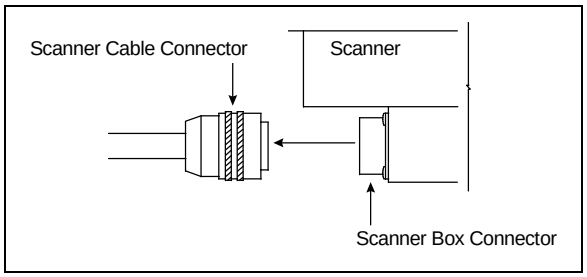

7 Store the removed scanner cover-and-module assembly in a safe place until you return it to STC for repair.

8 Attach the scanner cable connector to the scanner box connector (on the new scanner cover-and-module assembly).

9 With the hole (on top of the scanner cover) facing north or east, replace the scanner cover-and-module assembly onto its mount.

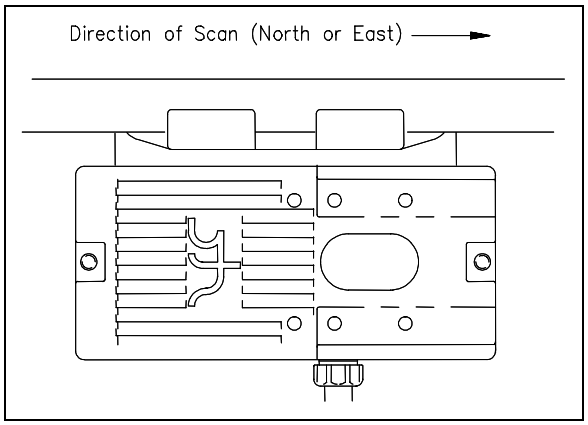

10 Using a T-handle 1/4-inch hex-wrench, tighten the two screws (on the scanner cover) until they are completely tight.

11 Turn on power to the SmartScanNG² enclosure.

D.2 Wheel Scanners

The figure below shows the major parts of a Type2 wheel scanner.

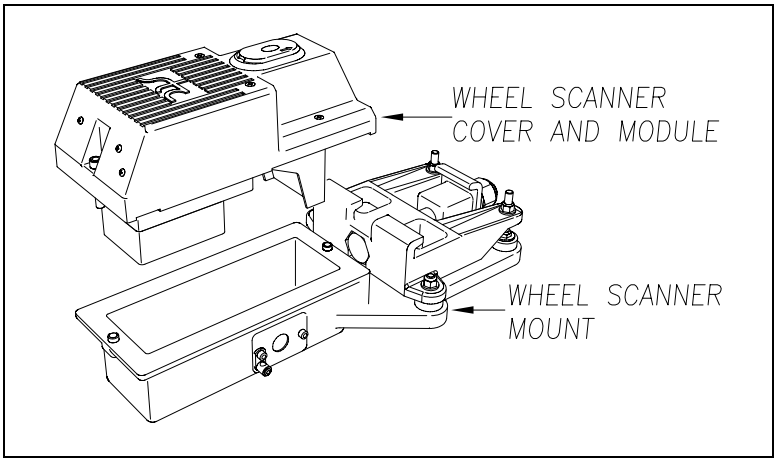

To replace a Type2 wheel scanner cover-and-module assembly:

1. Be sure that you have on hand a new scanner cover-and-module assembly.
2. Be sure that you have on hand a T-handle 1/4-inch hex-wrench.
3. Turn off all power to the SmartScanNG² enclosure.
4. Using a T-handle 1/4-inch hex-wrench, loosen the two socket-head-cap screws on the cover of the bearing scanner.
5. Separate the scanner cover-and-module assembly from its mount.
6. Disconnect the scanner cable connector from the scanner box connector.

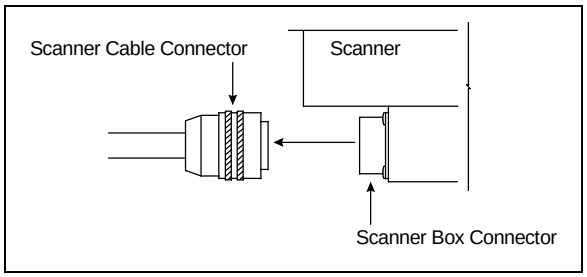

7. Store the removed scanner cover-and-module assembly in a safe place until you return it to STC for repair.
8. Attach the scanner cable connector to the scanner box connector (on the new scanner cover-and-module assembly).
9. With the hole (on top of the scanner cover) facing the center of the track, replace the scanner cover-and-module assembly onto its mount.
10. Using a T-handle 1/4-inch hex-wrench, tighten the two screws (on the scanner cover) until they are completely tight.
11. Turn on power to the SmartScanNG² enclosure.

Appendix E
Replacement of Type3 Scanners

There are bearing scanners and wheel scanners. Both contain two major parts. The top part is the cover-and-module assembly. The module and its protective cover are tightly integrated and rarely should be taken apart. Except for the change of **filter frames** in the wheel scanner module, both types of cover-and-module assemblies are identical and can be used interchangeably. The bottom part is the mount. Bearing scanner mounts and wheel scanner mounts are different in design. They can't be interchanged.

This appendix tells how to replace the scanner cover-and-module assemblies. The replacement of scanner mounts isn't covered in this guide.

E.1 Bearing Scanners

The figure below shows the major parts of a bearing scanner.

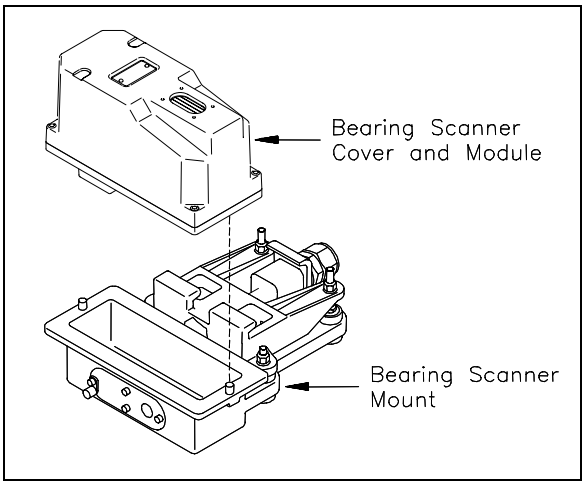

To replace a bearing scanner cover-and-module assembly:

1. Be sure that you have on hand a new scanner cover-and-module assembly.
2. Be sure that you have on hand a T-handle 1/4-inch hex-wrench.
3. Turn off all power to the scanners.

   This requires turning off the DC power switch on the SmartScanNG² enclosure and unplugging the AC power cord on the bottom of the SmartScanNG² enclosure.

4 Using a T-handle 1/4-inch hex-wrench, loosen the six socket-head-cap screws on the cover of the bearing scanner.

Four screws attach the weather cover to the mounting plate and two screws attach the mounting plate to the mount.

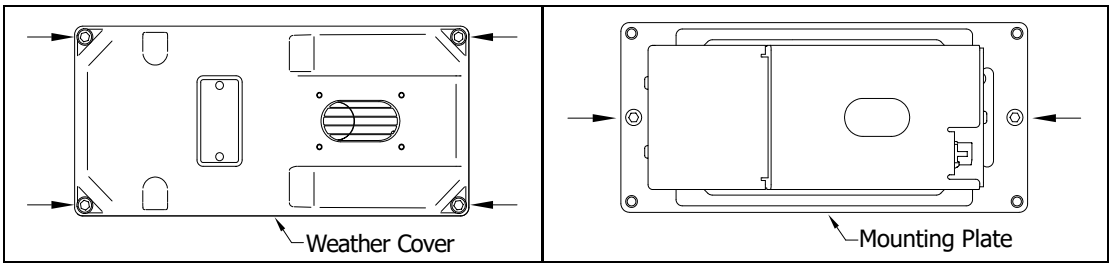

5 Separate the bearing scanner cover-and-module assembly from its mount.

6 Disconnect the heater wiring plug.

7 Disconnect the scanner cable connector from the scanner box connector.

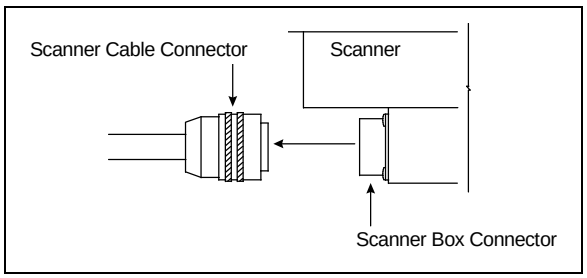

8 Store the removed scanner cover-and-module assembly in a safe place until you return it to STC for repair.

9 Attach the scanner cable connector to the scanner box connector of the new scanner cover-and-module assembly.

10 With the hole on top of the bearing scanner cover facing north or east, set the mounting plate back onto its scanner mount.

11 Using the T-handle 1/4-inch hex-wrench, uniformly tighten the two socket-head-cap screws.

12 Reconnect the heater wiring plug.

13 With the hole on top of the bearing scanner cover facing north or east, set the weather cover back onto its mounting plate.

14 Using the T-handle 1/4-inch hex-wrench, uniformly tighten the four socket-head-cap screws.

The top view of the bearing scanner mounting plate and weather cover is shown below.

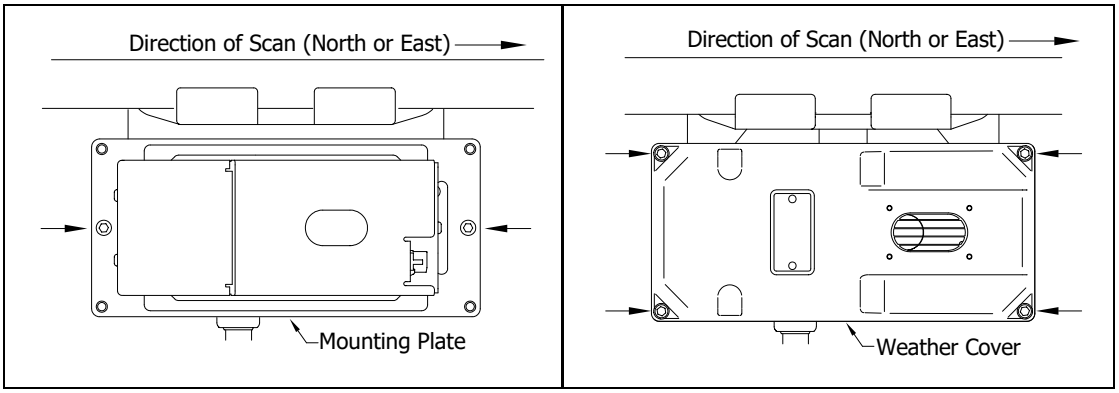

15 Turn on the power to the scanners.

An assembled bearing scanner looks like this.

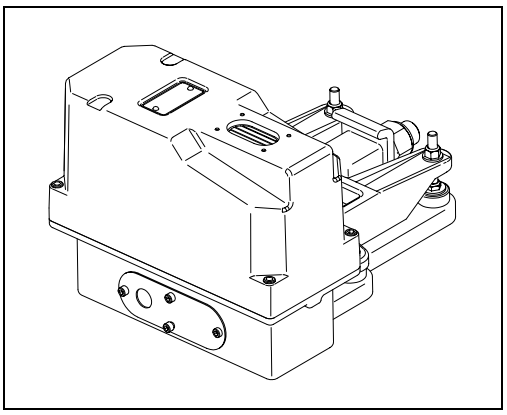

E.2 Wheel Scanners

The figure below shows the major parts of a wheel scanner.

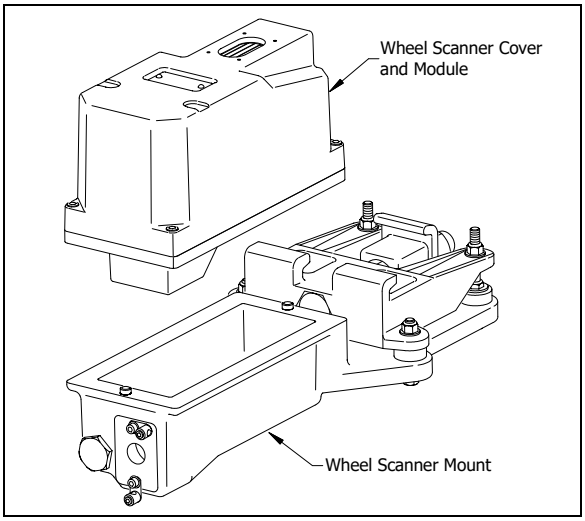

To replace a wheel scanner cover-and-module assembly:

1. Be sure that you have on hand a new scanner cover-and-module assembly.
2. Be sure that you have on hand a T-handle 1/4-inch hex-wrench.
3. Turn off all power to the scanners.

   This requires turning off the DC power switch on the SmartScanNG² enclosure and unplugging the AC power cord on the bottom of the SmartScanNG² enclosure.
4. Using a T-handle 1/4-inch hex wrench, loosen the six socket-head-cap screws on the cover of the wheel scanner.

   Four screws attach the weather cover to the mounting plate, and two screws attach the mounting plate to the mount.

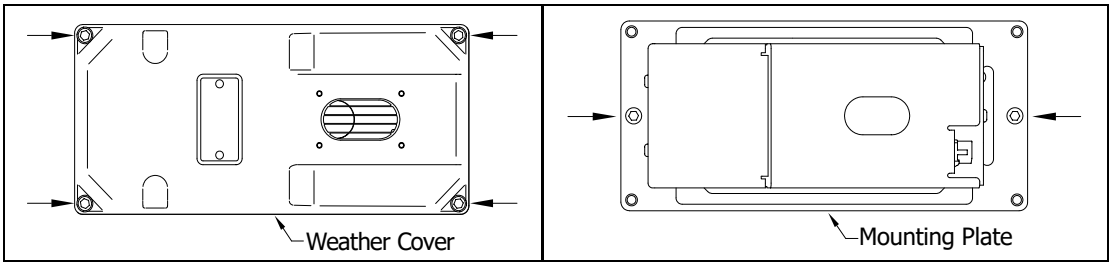

5. Separate the wheel scanner cover-and-module assembly from its mount.
6. Disconnect the heater wiring plug.
7. Disconnect the scanner cable connector from the scanner box connector.

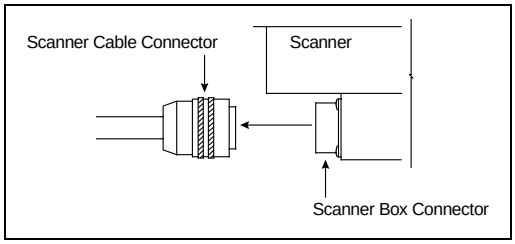

8. Store the removed scanner cover-and-module assembly in a safe place until you return it to STC for repair.
9. Attach the scanner cable connector to the scanner box connector of the new scanner cover-and-module assembly.
10. With the hole on top of the wheel scanner cover facing the center of the track, set the mounting plate back onto its scanner mount.
11. Using the T-handle 1/4-inch hex-wrench, uniformly tighten the two socket-head-cap screws.
12. Reconnect the heater wiring plug.
13. With the hole on top of the wheel scanner cover facing the center of the track, set the weather cover back onto its mounting plate.
14. Using the T-handle 1/4-inch hex-wrench, uniformly tighten the four socket-head-cap screws.
15. Turn on the power to the scanners.

Appendix F
Calibration of Type2 Scanners

The SmartScanNG² system self-calibrates its pyrometer interface circuitry. You need only put a preheated calibrated heat source on a scanner and place the system in autocalibration mode. The system then scans all pyrometer inputs until the signal from the calibrated heat source is located. The necessary adjustments to the related interface circuitry are automatically made while the system monitors its own progress by analyzing changes in the heat signals. Once the procedure has been completed, autocalibration mode is disengaged and the calibration results are displayed on your computer.

This appendix tells how to use the calibrated heat source to calibrate the scanners.

F.1 Bearing Scanners

STC recommends that you use the calibrated heat source (2100-810NG) only when the outside (ambient) temperature is above 0°F (-18°C) and below 90°F (32°C). If you must use it at other times, do so only when the needle is centered on the front of the temperature meter. If the needle isn't stabilized within ± 2-degrees of the setpoint, the heat source isn't operating properly.

To calibrate a Type2/Type3 bearing scanner:

1 Be sure that you have on hand an STC calibrated heat source (2100-810NG) and a laptop computer.

2 On the control panel of the calibrated heat source, toggle the **Gating** switch off.

3 Plug the proper end of the supplied 50-foot (15.2-meter) power cord into the six-contact circular connector on the front of the calibrated heat source.

4 Plug the other end of the power cord into a grounded three-wire 110-120 VAC outlet in the wayside enclosure.

The function connector that is not being used has live AC present.

5 Cover the function connector that is not being used with the supplied dust cover.

6 On the control panel, turn the temperature knob to **180**.

7 Put the heat source in a shady area, out of direct sunlight.

8 Wait about 8 minutes for the heat source to reach operating temperature and stabilize.

The heat source has reached operating temperature and stabilized when the temperature meter needle remains centered.

Once the temperature stabilizes, calibration may begin. Once stabilized, the temperature will change less than plus-or-minus one degree Fahrenheit.

9 With the power cord to the front of the scanner, place the calibrated heat source on the scanner.

10 Be sure that a computer is plugged into COM1 (on the side of the Controller module), that it is turned on, that it has appropriate communications software installed, that the communications software is set to use full-duplex, that the baud rate is set to 19,200, and that a LOG file is opened.

11 Using the serial interface, display the Main menu.

Section 4.0 - Serial Interface tells how to display the Main menu. The Main menu looks like this.

```
SmartSCAN NG2
01/18/2022 13:13:28 EST
Main Menu – Comm
-----------------------------------
                  .
                  .
                  .

[J] - Event Log
[K] - System Functions Menu
[L] - Replay Train
[M] - Security Menu
[N] - Debug Menu
[O] - Diagnostics Menu
[P] - Development Menu
[X] – Exit
```

12 Select the System Functions menu.

The System Functions menu appears. The Auto-Calibration option is used to calibrate the system's pyrometer interface circuitry.

```
                  .
                  .
                  .
[E] - 1KHz Test Tone
[F] - Auto-Calibration
[G] - Reboot System
[H] - Delete All Stored Train Data
[I] - Clear Event Log
[J] - Update Menu
[K] - Maintenance Menu
[L] - Volume Up (3)
[M] - Volume Down (3)
[N] - Resistor Baseline Data
[O] - Radio Programming Menu
[P] - Scanner Test
[Q] - Calibrate Frauscher Transducers
[R] - Virtual Gate Test
[X] - Exit
```

13 Select Auto-Calibration to initiate process.

The SmartScanNG² system will now calibrate itself. Follow along on your interface screen until you see "Auto-Calibration Disengaged." This message is an indication that the system is done with the calibration procedure. To abort the process, press **[Esc]** (on your computer) or remove the heat source (from the scanner).

14 When "Auto-Calibration Disengaged" is displayed on your computer, remove the calibrated heat source.

15 To return to the Main menu, type **X**.

16 To exit the serial interface and return the system to normal operation, type **X**.

17 Store the calibrated heat source and its cable in the wayside enclosure.

NOTE:

Upon completion of autocalibration, the system acquires the scanner resistor temperature baseline values. The process begins with a 20-minute wait period in which the resistors are allowed to cool down. The system counts down during this period, sounding a tone each minute. After the 20-minute cooldown period, the system opens and closes the shutters for a period of 8 minutes.

Covering the apertures of all four scanners during the baseline acquisition routine should result in a more accurate baseline measurement because the reference for the scanner is stable when covered. See **Appendix K** for a detailed explanation and instructions.

F.2 Wheel Scanners

STC recommends that you use the calibrated heat source (2100-810NG) only when the outside (ambient) temperature is above 0°F (-18°C) and below 90°F (32°C). If you must use it at other times, do so only when the needle is centered on the front of the temperature meter. If the needle isn't stabilized within ± 2-degrees of set point, the heat source isn't operating properly.

To calibrate the Type2 wheel scanners:

1. Be sure that you have on hand an STC calibrated heat source (2100-810NG) and a laptop computer.
2. On the control panel of the calibrated heat source, toggle the **Gating** switch off.
3. Plug the proper end of the supplied 50-foot (15.2-meter) power cord into the **six**-contact circular connector on the front of the calibrated heat source.
4. Plug the other end of the power cord into a grounded three-wire 110-120 VAC outlet in the wayside enclosure.

   The function connector that is not being used has live AC present.

5. Cover the function connector that is not being used with the supplied dust cover.
6. On the control panel, turn the temperature knob to **180**.
7. Put the heat source in a shady area, out of direct sunlight.
8. Wait about 8 minutes for the heat source to reach operating temperature and stabilize.

   The heat source has reached operating temperature and stabilized when the temperature meter needle remains centered.

   Once the temperature stabilizes, calibration may begin. Once stabilized, the temperature will change less than plus-or-minus one degree Fahrenheit.

9. Remove the attenuation plug from the wheel scanner.

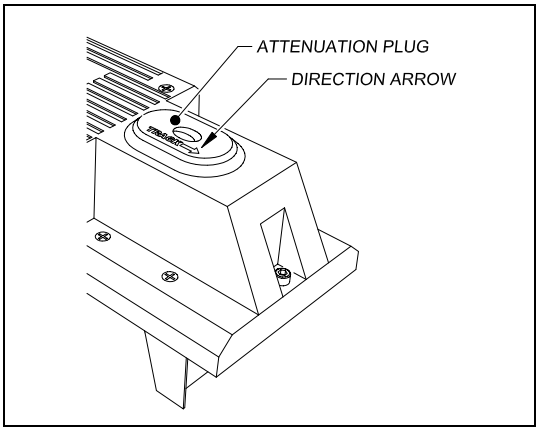

10. With the power cord to the front of the scanner, place the calibrated heat source on the scanner.

11 Be sure that a computer is plugged into COM1 (on the side of the Controller module), that it is turned on, that it has appropriate communications software installed, that the communications software is set to use full-duplex, that the baud rate is set to 19,200, and that a LOG file is opened.

12 Using the serial interface, display the Main menu.

Section 4.0 - Serial Interface tells how to display the Main menu. The Main menu looks like this.

```
SmartSCAN NG2
01/18/2022 13:13:28 EST
Main Menu – Comm
-----------------------------------

                  .
                  .
                  .
[J] - Event Log
[K] - System Functions Menu
[L] - Replay Train
[M] - Security Menu
[X] – Exit
```

13 Select the System Functions menu.

The System Functions menu appears. The Auto-Calibration option is used to calibrate the system's pyrometer interface circuitry.

```
                  .
                  .
                  .
[F] - Auto-Calibration
[G] - Reboot System
[H] - Delete All Stored Train Data
[I] - Clear Event Log
[J] - Update Menu
[K] - Maintenance Menu
[L] - Volume Up (3)
[M] - Volume Down (3)
[N] - Resistor Baseline Data
[O] - Radio Programming Menu
[P] - Scanner Test
[Q] - Calibrate Frauscher Transducers
[R] - Virtual Gate Test
[X] – Exit
```

14 Select Auto-Calibration to initiate the process.

The SmartScanNG² system will now calibrate itself. Follow along on your interface screen until you see "Auto-Calibration Disengaged." This message is an indication that the system is done with the calibration procedure. To abort the process, press **[Esc]** (on your computer) or remove the heat source (from the scanner).

15 When "Auto-Calibration Disengaged" is displayed on your computer, remove the calibrated heat source.

16 To return to the Main menu, type **X**.

17 To exit the serial interface and return the system to normal operation, type **X**.

18 Replace the attenuation plug.

The attenuation plug has a direction arrow molded into the top of the plug. This arrow should be pointing toward the rail.

19 Store the calibrated heat source and its cable in the wayside enclosure.

NOTE:

Upon completion of autocalibration, the system acquires the scanner resistor temperature baseline values. The process begins with a 20-minute wait period in which the resistors are allowed to cool down. The system counts down during this period, sounding a tone each minute. After the 20-minute cooldown period, the system opens and closes the shutters for a period of 8 minutes.

Covering the apertures of all four scanners during the baseline acquisition routine should result in a more accurate baseline measurement because the reference for the scanner is stable when covered. See **Appendix K** for a detailed explanation and instructions.

Appendix G
Calibration of Type3 Scanners

The SmartScanNG² system self-calibrates its pyrometer interface circuitry. You need only put a preheated calibrated heat source on a scanner and place the system in autocalibration mode. The system then scans all pyrometer inputs until the signal from the calibrated heat source is located. The necessary adjustments to the related interface circuitry are automatically made while the system monitors its own progress by analyzing changes in the heat signals. Once the procedure has been completed, autocalibration mode is disengaged and the calibration results are displayed on your computer.

This appendix tells how to use the calibrated heat source to calibrate the scanners.

G.1 Bearing Scanners

STC recommends that you use the calibrated heat source (2100-810NG) only when the outside (ambient) temperature is above -18°C (0°F) and below 32°C (90°F). If you must use it at other times, do so only when the needle is centered on the front of the temperature meter. If the needle isn't stabilized within ± 2-degrees of the setpoint, the heat source isn't operating properly.

To calibrate a bearing scanner:

1. Be sure that you have on hand an STC calibrated heat source (2100-810NG) and a laptop computer.
2. On the control panel of the calibrated heat source, toggle the **Gating** switch off.
3. Plug the proper end of the supplied 50-foot (15-meter) power cord into the **six**-contact circular connector on the front of the calibrated heat source.

   Sixty Hz is critical for proper operation. For a site that doesn't have a 120-volt 60 Hz power source, the heat source should be powered from a true sine wave inverter capable of 250 watts with an output of at least 110 volts at 60 Hz. The inverter should operate from an input voltage of 10.5 VDC to 15 VDC. A 120-volt USA socket should be provided to match the heat source power cord. The inverter should be grounded according to the manufacturer's recommendations.

   WARNING
   Once plugged in, both function connectors will have live AC present.

4. Using the supplied dust cap, cover the function connector that isn't being used.
5. Plug the other end of the power cord into the 120-volt USA socket.
6. On the control panel of the calibrated heat source, turn the temperature knob to **180°**.

7 Put the heat source in a shady area, out of direct sunlight and out of the wind.

8 Wait about 8 minutes for the heat source to reach operating temperature and stabilize.

The heat source has reached operating temperature and stabilized when the temperature meter needle remains centered.

Once the temperature stabilizes, calibration may begin. Once stabilized, the temperature will change less than plus-or-minus one degree Fahrenheit.

9 With the power cord to the rear of the scanner, place the calibrated heat source on the bearing scanner.

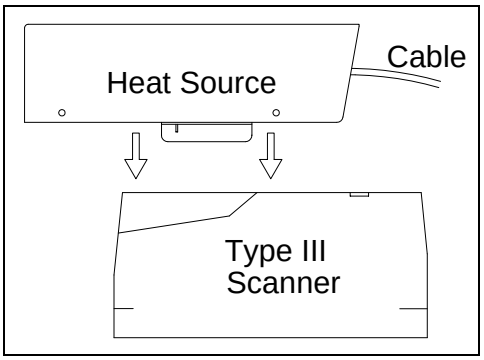

10 To prepare your computer:

a Plug your computer into COM1 using a crossover (null-modem) cable.

b Turn on your computer.

c Be sure that your computer has installed communications software, that it is set to use full-duplex, and that the baud rate is set to 19,200.

11 Using the serial interface, display the Main menu. Select System Functions Menu.

The Main menu looks like this.

```
Main Menu – Comm
-----------------------------------
                  •
                  •
                  •
[H] - AEI Diagnostic
[I] - Setup
[J] - Event Log
[K] - System Functions Menu
[L] - Replay Train
[M] - Security Menu
[X] - Exit
```

12 Select **Auto-calibration** to calibrate the system's pyrometer interface circuitry.

The SmartScanNG² system will now calibrate itself. **Follow along on your computer screen until you see "Auto-Calibration Disengaged."** This message is an indication that the system is done with the calibration procedure. To abort the process, press **[Esc]** on your computer <u>or</u> remove the heat source from the bearing scanner.

```
                    .
                    .
                    .
  [E] - 1KHz Test Tone
  [F] - Auto-Calibration
  [G] - Reboot System
  [H] - Delete All Stored Train Data
  [I] - Clear Event Log
  [J] - Update Menu
  [K] - Maintenance Menu
  [L] - Volume Up (3)
  [M] - Volume Down (3)
  [N] - Resistor Baseline Data
  [O] - Radio Programming Menu
  [P] - Scanner Test
  [Q] - Calibrate Frauscher Transducers
  [R] - Virtual Gate Test
  [X] – Exit
```

On your computer screen, an acceptable calibration looks like this. Your values will be different.

```
Auto Calibration Selected
Scanner Types
-----------------------------------------------------------------------
Rail-1..................... Type-II   Rail-2................... Type-III
Wheel-1.................... Type-III  Wheel-2.................. Type-II

Is this correct ?

Signal levels in millivolts with closed shutters
    Rail1            Rail2            Wheel1           Wheel2
Min/Max/Average  Min/Max/Average  Min/Max/Average  Min/Max/Average
 0   80    20     0   60    20     0   60    20     20  80    40

Opening the shutters.
Scanning for heat source. Press the 'Esc' key to abort.
Located 187F heat source at Rail1. Auto-calibration beginning in 0 secs.

.......Auto-Calibration Engaged.......

Testing Digital-Pot U-306. Stand by.
Digital-pot checks OK.
Previous calibrated digital-pot. setting was 38.
Adjusting digital-pot.
Temp = 225F  Pot = 59  Sec =   1   Pot. decremented by 1 step.
Temp = 224F  Pot = 58  Sec =   1   Pot. decremented by 1 step.
Temp = 221F  Pot = 57  Sec =   2   Pot. decremented by 1 step.
Temp = 219F  Pot = 56  Sec =   3   Pot. decremented by 1 step.

            .
            .

Temp = 183F  Pot = 35  Sec =  15   Pot. decremented by 1 step.
Temp = 182F  Pot = 34  Sec =  18   Pot. decremented by 1 step.
Temp = 181F  Pot = 33  Sec =  29   Pot. decremented by 1 step.
Temp = 179F  Pot = 33  Sec =  93   Monitoring heat source temperature.
Rail1 digital-pot setting of 33 was stored in EEPROM.
East Rail Scanner Calibration complete.
The setpoint is 180F. The calibrated temp. is 179F.
Closing the shutters.
Resistor test pending.

.......Auto-Calibration Disengaged.......
```

Before the shutters are opened, if you get a signal level greater than 200 millivolts, it usually means that there is noise on the scanner inputs, which most times is caused by an electrical problem with the scanner. If you cannot isolate and fix the cause of this problem, call STC for help.

```
Auto Calibration Selected

Signal levels in millivolts with closed shutters
    Rail1            Rail2            Wheel1           Wheel2
Min/Max/Average  Min/Max/Average  Min/Max/Average  Min/Max/Average
210 250    210     0   60    20     0   60    20     20  80    40

            .
            .
            .
```

Before the shutters are closed, if you don't get a calibrated temperature in the range 178°F to 182°F, it means that the scanner wasn't calibrated. If cleaning the optics doesn't solve your problem, replace the scanner cover-and-module assembly. If this doesn't solve your problem, call STC for help in fixing the problem.

13 When "Auto-Calibration Disengaged" is displayed on your computer, remove the calibrated heat source.

14 To return to the Main menu, type **X**.

15 To exit the serial interface and return the system to normal operation, type **X**.

16 Store the calibrated heat source and its power cord in the wayside enclosure.

NOTE:

Upon completion of autocalibration, the system acquires the scanner resistor temperature baseline values. The process begins with a 20-minute wait period in which the resistors are allowed to cool down. The system counts down during this period, sounding a tone each minute. After the 20-minute cooldown period, the system opens and closes the shutters for a period of 8 minutes.

Covering the apertures of all four scanners during the baseline acquisition routine should result in a more accurate baseline measurement because the reference for the scanner is stable when covered. See **Appendix K** for a detailed explanation and instructions.

G.2 Wheel Scanners

STC recommends that you use the calibrated heat source (2100-810NG) only when the outside (ambient) temperature is above -18°C (0°F) and below 32°C (90°F). If you must use it at other times, do so only when the needle is centered on the front of the temperature meter. If the needle isn't stabilized within ± 2-degrees of set point, the heat source isn't operating properly.

To calibrate a wheel scanner:

1. Be sure that you have on hand an STC calibrated heat source (2100-810NG) and a laptop computer.
2. On the control panel of the calibrated heat source, toggle the **Gating** switch off.
3. Plug the proper end of the supplied 50-foot (15-meter) power cord into the **six**-contact circular connector on the front of the calibrated heat source.

   Sixty Hz is critical for proper operation. For a site that doesn't have a 120-volt 60 Hz power source, the heat source should be powered from a true sine wave inverter capable of 250 watts with an output of at least 110 volts at 60 Hz. The inverter should operate from an input voltage of 10.5 VDC to 15 VDC. A 120-volt USA socket should be provided to match the heat source power cord. The inverter should be grounded according to the manufacturer's recommendations.

   WARNING
   Once plugged in, both function connectors will have live AC present.

4. Using the supplied dust cap, cover the function connector that isn't being used.
5. Plug the other end of the power cord into the 120-volt USA socket.
6. On the control panel of the calibrated heat source, turn the temperature knob to **180°**.
7. Put the heat source in a shady area, out of direct sunlight and out of the wind.
8. Wait about 8 minutes for the heat source to reach operating temperature and stabilize.

   The heat source has reached operating temperature and stabilized when the temperature meter needle remains centered.

   Once the temperature stabilizes, calibration may begin. Once stabilized, the temperature will change less than plus-or-minus one degree Fahrenheit.

9 Replace the red filter frame with the black one during calibration.

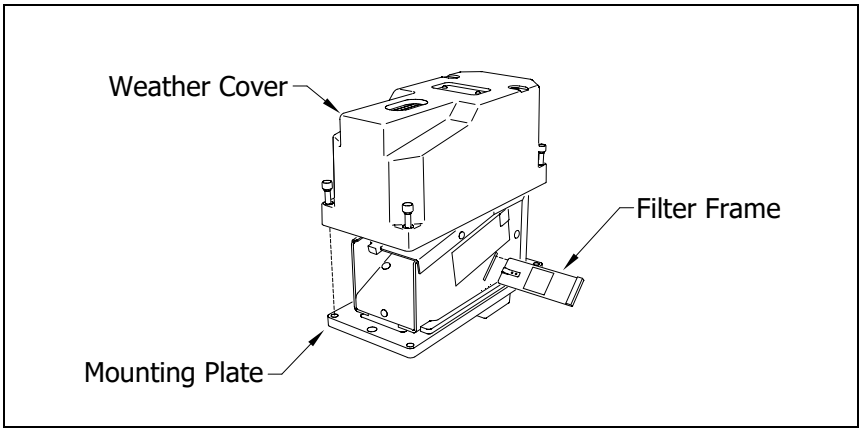

You'll need to remove the weather cover before you can replace the filter frame. Four socket head cap screws attach the weather cover to the mounting plate. Before continuing, be sure that the black filter frame is securely in place and that the four socket-head-cap screws on the weather cover are completely tight.

10 With the power cord to the rear of the scanner, place the calibrated heat source on the wheel scanner.

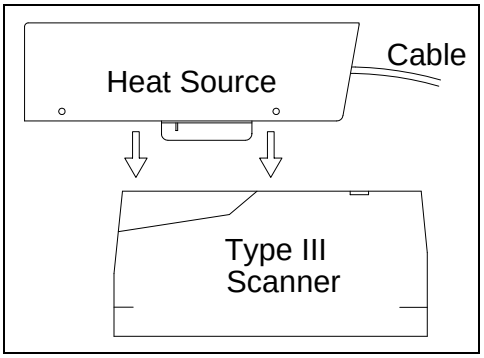

11 To prepare your computer:

a Plug your computer into COM1 using a crossover (null-modem) cable.

b Turn on your computer.

c Be sure that your computer has installed communications software, that it is set to use full-duplex, and that the baud rate is set to 19,200.

12 Using the serial interface, display the Main menu.

The Main menu looks like this.

```
SmartSCAN NG2
01/18/2022 13:13:28 EST
Main Menu – Comm
-----------------------------------

                 .
                 .
                 .
[G] - Train DSRs
[H] - AEI Diagnostic
[I] - Setup
[J] - Event Log
[K] - System Functions Menu
[L] - Replay Train
[M] - Security Menu
[X] - Exit
```

13 Select the **Auto-Calibration option** to calibrate the system's pyrometer interface circuitry.

The SmartScanNG² system will now calibrate itself. **Follow along on your computer screen until you see "Auto-Calibration Disengaged."** This message is an indication that the system is done with the calibration procedure. To abort the process, press **[Esc]** on your computer <u>or</u> remove the heat source from the wheel scanner.

Before the shutters are opened, if you get a signal level <u>greater</u> <u>than</u> 200 millivolts, it usually means that there is noise on the scanner inputs, which most times is caused by an electrical problem with the scanner. If you cannot isolate and fix the cause of this problem, call STC for help.

```
                 .
                 .
                 .
[E] - 1KHz Test Tone
[F] - Auto-Calibration
[G] - Reboot System
[H] - Delete All Stored Train Data
[I] - Clear Event Log
[J] - Update Menu
[K] - Maintenance Menu
[L] - Volume Up (3)
[M] - Volume Down (3)
[N] - Resistor Baseline Data
[O] - Radio Programming Menu
[P] - Scanner Test
[Q] - Calibrate Frauscher Transducers
[R] - Virtual Gate Test
[X] - Exit
```

Before the shutters are closed, if you don't get a calibrated temperature in the range 178°F to 182°F, it means that the scanner wasn't calibrated. If cleaning the optics doesn't solve your problem, replace the scanner cover-and-module assembly. If this doesn't solve your problem, call STC for help in fixing the problem.

14 When "Auto-Calibration Disengaged" is displayed on your computer, remove the calibrated heat source.

15 To return to the Main menu, type **X**.

16 To exit the serial interface and return the system to normal operation, type **X**.

17 Replace the black filter frame with the red one immediately following the successful completion of the auto-calibration function.

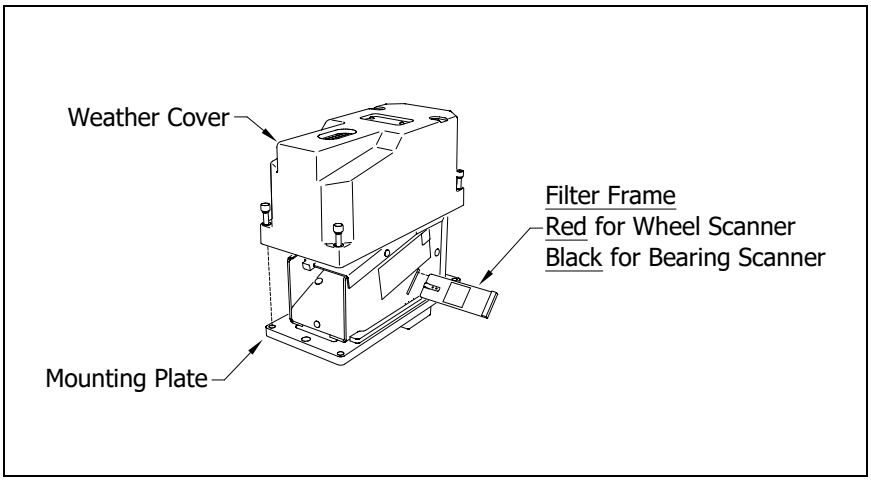

**** Before continuing, be sure that the red filter frame is securely in place and that the four socket-head-cap screws on the weather cover are completely tight. ****

18 Store the calibrated heat source and its power cord in the wayside enclosure.

NOTE:

Upon completion of autocalibration, the system acquires the scanner resistor temperature baseline values. The process begins with a 20-minute wait period in which the resistors are allowed to cool down. The system counts down during this period, sounding a tone each minute. After the 20-minute cooldown period, the system opens and closes the shutters for a period of 8 minutes.

Covering the apertures of all four scanners during the baseline acquisition routine should result in a more accurate baseline measurement because the reference for the scanner is stable when covered. See **Appendix K** for a detailed explanation and instructions.

G.3 Heat Source: Power Cable Warning

Warning - Caution

<u>PLEASE</u> – ONLY USE THE POWER CORD THAT WAS SHIPPED WITH THIS HEAT SOURCE.

USE OF THE OLD CORD WITH PINS IN THE CONNECTOR WILL DAMAGE THIS HEAT SOURCE

A few years ago the power cord connector was found to be a shock hazard because the connector had pins that might be easy to touch if someone were not paying attention. If the power cord were plugged into AC that would be a startling experience! So the connectors on both the power cord and the heat source were changed. Because of that change, a new power cord was and is shipped with each new heat source.

<u>Old style plug with pins.</u>

<u>New heat source with pins.</u>

As you can see, even though the connectors will fit together, they won't work together. When the connectors are screwed together the two sets of pins touch and cause a reverse polarity situation which damages the heat source.

Appendix H
Lens Cleaning of Type3 Scanners

This appendix tells how to clean the optics in the scanners.

To clean the optics in the scanners:

1 Be sure that you have on hand a T-handle 1/4-inch hex-wrench.

2 Turn off all power to the scanners.

This requires turning off the DC power switch on the SmartScanNG² enclosure and unplugging the AC power cord on the bottom of the SmartScanNG² enclosure.

3 Using the T-handle 1/4-inch hex-wrench, loosen the four socket-head-cap screws that attach the weather cover to the mounting plate.

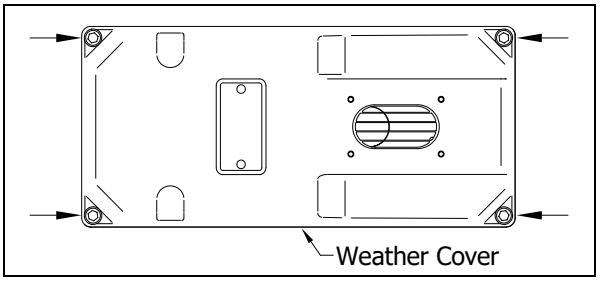

4 Remove the weather cover from its mounting plate.

Be careful not to damage the electrical connection for the cover heaters.

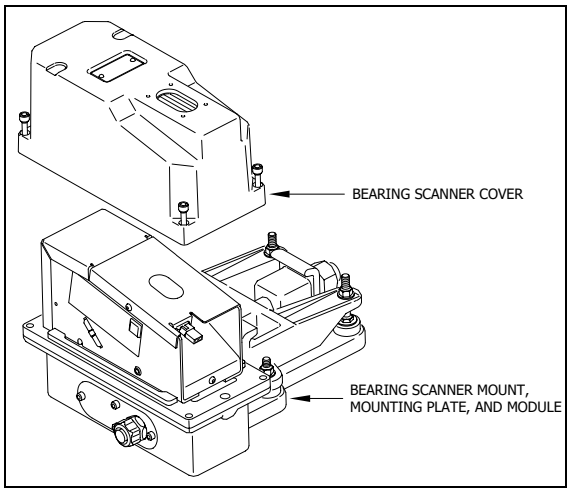

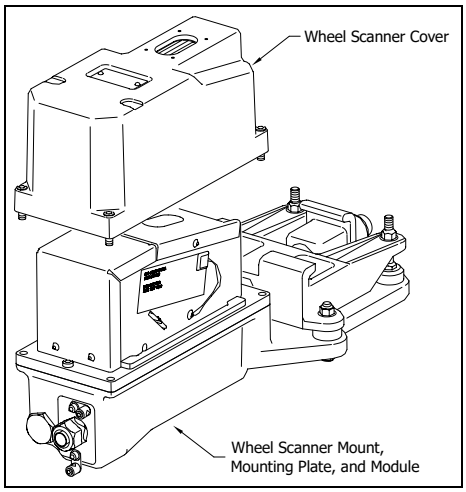

5 Disconnect the heater wiring plug.

On the side of the scanner module, you'll find a metal tab that protrudes about 1/4 inch outside the module.

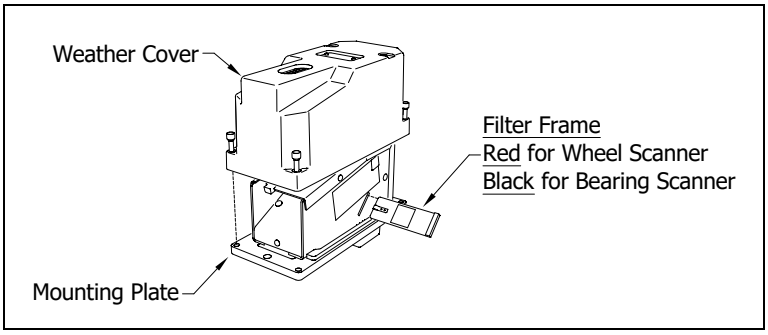

6 Grasp the tab and pull the filter frame out of the scanner module.

7 Using the brush supplied with the tool kit, lightly dust any excess material from the filter frame glass.

Be careful not to abrade or scratch the surface of the lens.

8 Apply a small amount of Vallen V8L cleaning solution (included in the tool kit) directly to the glass filter to loosen any remaining contamination.

9 Gently polish the reflective glass surface of the filter to remove any remaining contamination.

Pay close attention to the area around the perimeter of the lens. It is important that the entire surface of the lens is clean.

10 Open the shutter by stroking one of the gating transducers with a piece of ferrous metal.

11 If the lens surface appears to have any dust on it, insert the brush from the tool kit through the baffle plates until it contacts the lens surface and apply a twisting motion to dislodge any accumulated dust.

12 Remove the brush and visually inspect the lens for cleanliness.

13 Reinstall the filter frame assembly properly - (The reflective surface will be facing the viewport opening of the scanner). Reconnect the heater wiring plug.

14 Re-connect the scanner cover heater.

15 If this is a **bearing scanner**:

With the hole on top of the bearing scanner cover facing north or east, set the weather cover back onto its mounting plate. Using the T-handle 1/4-inch hex-wrench, uniformly tighten the four socket-head-cap screws.

16 If this is a **wheel scanner**:

With the hole on top of the wheel scanner cover facing the center of the track, set the weather cover back onto its mounting plate. Using the T-handle 1/4-inch hex-wrench, uniformly tighten the four socket-head-cap screws.

17 Turn on power to the scanners.

Appendix I
Predictive Gate Scanning

This appendix describes predictive gate scanning of bearings.

I.1 Overview

If a pyrometer is exposed to extreme infrared energy emission, the device itself can be driven into a saturated state. When this happens, it is blinded to subsequent changes in infrared energy emission. This blinded state can last up to 1-1/2 seconds.

Under certain circumstances, a pyrometer may be driven into saturation before the opening of the gate for a given axle. If the open-gate period was the only time during which pyrometer readings were sampled and processed, the system might miss an overheated bearing due to a device that was blinded before the opening of the gate. This can happen when a bearing is so overheated that it gives off infrared energy that can be seen by the pyrometer long before the bearing enters the pyrometer's field of view.

To compensate for this, the SmartScanNG² system includes special logic for processing heat seen by the pyrometers as they scan between the axle gates. The interval between axles has been divided into two parts.

The first part of this interval is the 16 inches (40.6 centimeters) that immediately precede the axle as it approaches the bearing scanners. This interval is treated as a "predictive gate" region in which the actual gate period (the time a bearing is physically in the pyrometer's field of view) is extended by 16 inches (40.6 centimeters). The remainder of the "between gate" interval forms the second part. Heat values read during this second interval are ignored.

The figure below depicts the three distinct scanning intervals (the in-gate period plus the two between-gate intervals).

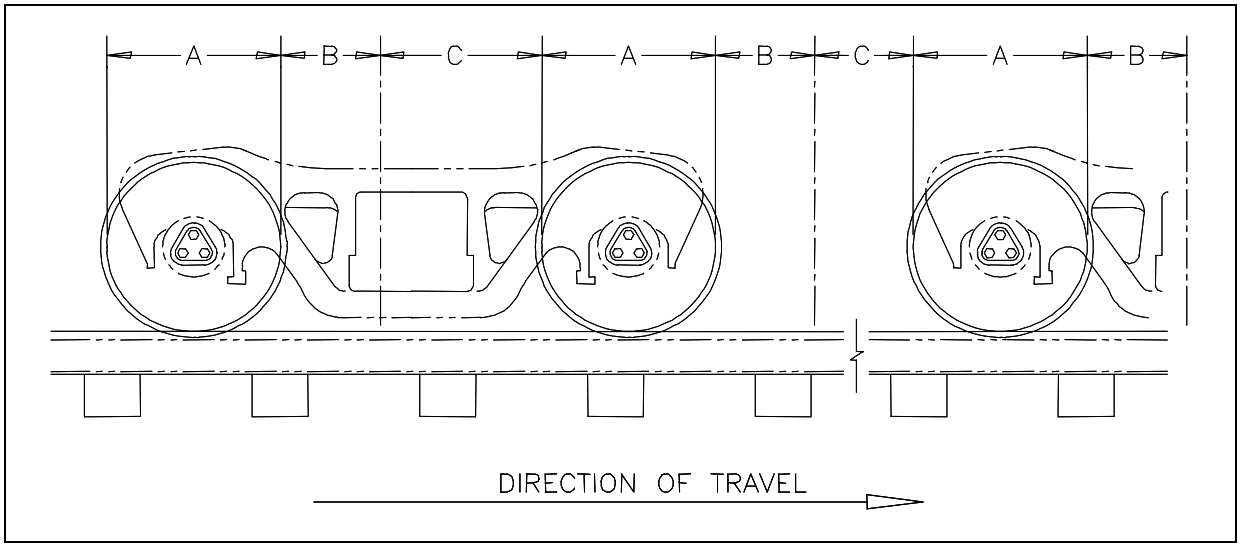

The table below defines the intervals.

Interval	Description
A	The normal bearing scanning interval of about 24 inches (61 centimeters), depending on the transducer spacing.
B	A distance of about 16 inches (40.6 centimeters) before a given wheel.
C	The distance between wheels that doesn't fall within interval-B.

I.2 Scanning Process

Interval-A is the normal bearing scanning interval. Interval-B is an extension of interval-A. The greatest value read in either of these two intervals is recorded as the temperature for the axle. This value is checked for alarm levels in the same manner that scanned bearing temperatures are normally handled.

For interval-A: Heat values read during interval-A are processed normally.

For interval-B: Heat values read during interval-B that do not meet or exceed the Absolute alarm threshold are ignored. Values that meet or exceed the Absolute alarm threshold are handled as follows:

- If the interval-A heat value meets or exceeds the Absolute alarm threshold, it is processed normally, and the interval-B heat reading is ignored.
- If the interval-A heat value does not meet or exceed the Absolute alarm threshold, but interval-B heat value does, a Pyrometer Saturation alarm is flagged, and the interval-B heat value is stored and reported for the alarmed axle.

For interval-C: Heat values read during interval-C are ignored.

The Very Slow Train alarm indicates that, at some point during train passage, four consecutive axles crossed the gating transducers at a speed of 7 mph (11.3 kph) or less. The firmware doesn't check for Pyrometer Saturation alarms if the train has been flagged with a Very Slow Train alarm.

I.3 Reporting the Pyrometer Saturation Alarm

If a Pyrometer Saturation alarm is detected and assigned to an axle, a printed message will appear on Detail reports.

The figure below shows part of a Train Detail report with a Pyrometer Saturation alarm. The contents of your report will be different.

```
                      Southern Technologies Corporation
                       Next Generation Detector System
                                 TRAIN DETAIL
==============================================================================

                                          .
                                          .
                                          .

            Rail       Wheel
Car Axle East  West  East  West   ON   OFF PW1 PW2  Alarms
  1    1   58    30    98   102   35     0  16  17
       2   58    30    98   102   35    82  13  13
       3  219    30    98   102   35    85  13  13   East Rail Pyro Saturation Alarm
       4   58    30    98   102   35   839  13  13
       5   58    30    98   102   35    85  13  13
       6   58    30    98   102   35    85  13  13

  2    7   58    30    98   102   35   238  13  13
       8   58    30    98   102   34    85  13  13

                                          .
                                          .
                                          .
```

Appendix J
2500-402 Spacer Kit Installation

The 2500-402 Spacer Kit provides hardware necessary to lower the Type III Hotwheel Scanner assembly by either ½” or 1” for those applications that require additional rail clearance.

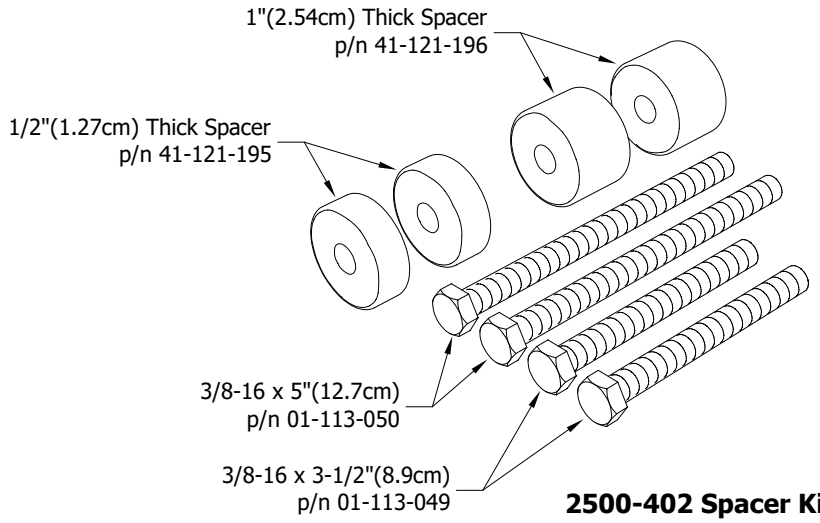

2500-402 Spacer Kit Contents

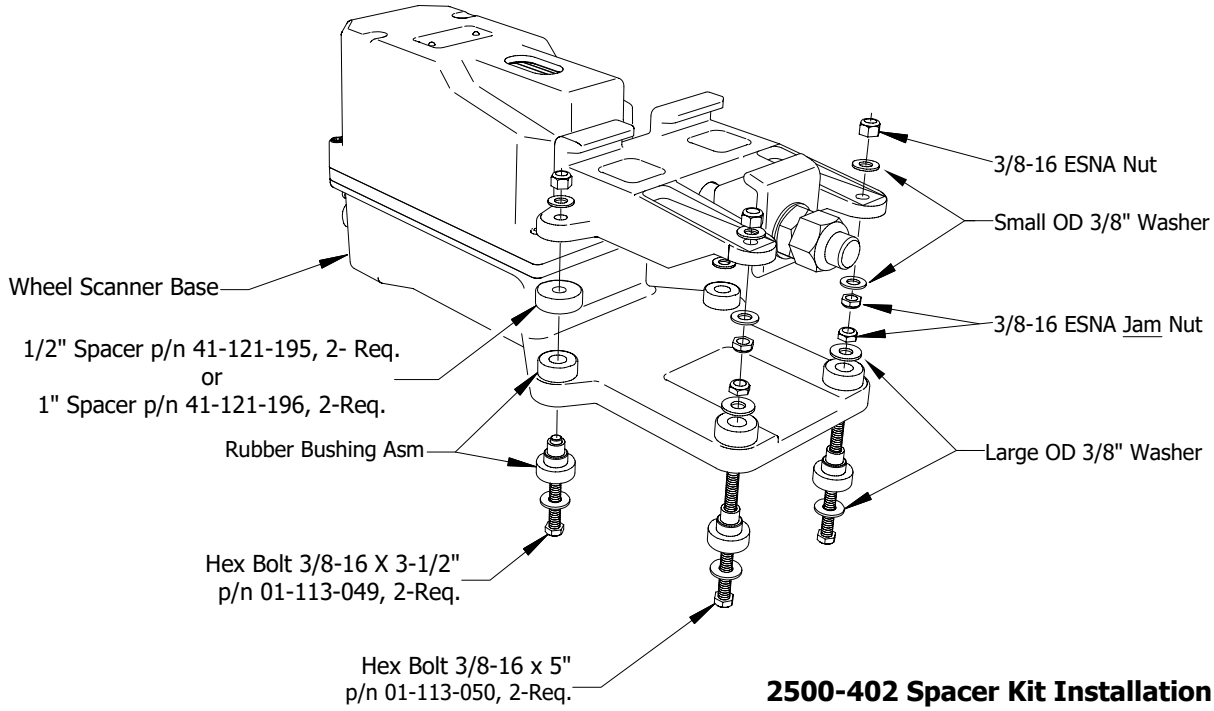

2500-402 Spacer Kit Installation

Appendix K
Scanner Resistor Baseline Acquisition

Upon completion of autocalibration, the system will acquire the scanner resistor temperature baseline values. The process begins with a 20-minute wait period in which the resistors are allowed to cool down. The system counts down during this period, sounding a tone each minute. After the 20-minute cooldown period, the system opens and closes the shutters for a period of 8 minutes.

NOTE: For wheel scanners, it is imperative that the red filter frame is replaced immediately after autocalibration has disengaged and before resistor baseline acquisition begins.

The reason for establishing the baseline tables at the end of the Auto-Cal cycle is the assumption that the system is then at its peak operating efficiency. The system is freshly calibrated and the lenses are clean. With the baselines established, the system can then recognize and compensate for slight degradations of the lens caused by moisture or dirt accumulation on the lens surface.

K.1 Bungalow Speaker Announcements

During the resistor-cooling period, the system announces through the speaker the following. These announcements aren't broadcast over the radio.

- A beep sounds once per minute until two minutes before the resistor test.
- At two minutes until the test, "Scanner resistor test beginning in 2 minutes" is voiced.
- At one minute until the test, "Scanner resistor test beginning in 1-minute" is voiced.

After the resistor cooling period:

- As the test begins, "Testing" is voiced. During this time, the word PENDING appears in the status column of the Resistor Data section.
- If the test was successful, "System working" is voiced. The word VALID appears in the status column of the Resistor Data section, signifying that the baseline test applies to each passing train.
- If the test wasn't successful, "Scanner resistor test beginning in two-zero minutes" is voiced, meaning that the system will try once more after 20 minutes to acquire an accurate resistor heat profile. During this time, the word PENDING appears in the status column of the Resistor Data section of the System Status Report. If the test fails a second time, the word INVALID appears in the same column. The system applies the interim integrity test to each passing train while either PENDING or INVALID appears.

K.2 Processing Resistor Baseline Results

Here are two rules the system uses:

- If any of the temperatures in the baseline table are less than or equal to 40°F, we consider the baseline to be invalid.
- The next sequential temperature has to increase or be no less than 6°F cooler than the last temperature. That is, if a temperature is 100°F, for example, the next temperature has to be greater than 100, equal to 100, but not less than 94.

If the system gets an invalid baseline, it will automatically try a second time. If it gets interrupted, it will also try a second time. The 300° F temperatures that show up in the baselines occasionally are more a reflection of the duty cycle controller for the shutter resistor. Some controllers cause the shutter resistors to heat up more quickly and sometimes overshoot the desired set point, whereas a controller that is operating at its optimum efficiency will ramp up to a value slightly below 300° F. Temperatures above 300° F do not result in an invalid baseline.

Look at the Resistor Data section of the System Status Report. INVALID indicates that the system has tried twice and could not acquire valid resistor data. If any of the baseline results for a scanner show INVALID, the only way to capture a new baseline is to run the Auto Cal process again. If the word PENDING appears in the status column, the system is waiting for the resistors to cool before acquiring resistor data or for the battery to charge to 13 volts. INVALID indicates that the system has tried twice and could not acquire valid resistor data. In either case, the system will apply the interim integrity test to passing trains, which doesn't require resistor baseline data.

Examples: Resistor Baseline Results

```
   Resistor Data
   ---------------------------------------------------------------------------
VOLTS AMB DATE     TIME  STATUS   30  40  50  60  70  80  90 100 110 120 130
     140 160 180 200 220 240 260 280 300 320 340 360 380 400 420 440 460 480
-------------------------------------------------------------------------------
RAIL 1
15.3 -008 01/11/12 12:53 INVALID 300,300,300,300,300,300,300,300,300,300,300
     300,300,300,300,300,300,300,300,300,300,300,300,300,300,300,300,300,300
RAIL 2
15.3 -008 01/11/12 12:53 INVALID 300,300,300,300,300,300,300,300,300,300,300
     300,300,300,300,300,300,300,300,300,300,300,300,300,300,300,300,300,300
WHEEL 1
15.3 -009 01/11/12 12:26 VALID   155,152,155,152,150,150,149,149,148,147,147
     148,149,150,149,150,151,150,151,151,151,151,151,150,151,152,152,152,154
WHEEL 2
15.3 -009 01/11/12 12:26 VALID   160,156,157,162,157,157,155,155,156,155,156
     154,156,157,158,157,158,157,158,158,160,160,158,158,160,160,160,160,158
===============================================================================
```

```
   Resistor Data
   ---------------------------------------------------------------------------
VOLTS AMB DATE     TIME  STATUS   30  40  50  60  70  80  90 100 110 120 130
     140 160 180 200 220 240 260 280 300 320 340 360 380 400 420 440 460 480
---------------------------------------------------------------------------
RAIL 1
13.4  057 09/30/11 11:59 INVALID 285,285,289,294,289,288,289,288,287,287,288
     287,289,290,290,272,270,277,294,297,297,297,298,300,300,300,300,300,300
RAIL 2
13.4  055 09/30/11 10:50 VALID   272,271,274,280,277,275,270,264,262,264,271
     277,278,282,284,285,287,283,280,272,271,270,269,268,269,270,268,269,271
WHEEL 1
13.4  055 09/30/11 10:50 VALID   145,148,154,155,156,157,156,156,157,160,158
     160,160,162,161,164,162,164,168,163,158,163,160,167,168,171,171,167,169
WHEEL 2
13.4  055 09/30/11 10:50 VALID   128,132,137,137,138,137,141,138,138,141,140
     141,142,142,144,144,145,148,147,147,148,147,147,148,147,148,149,150,151
===========================================================================
```

```
   Resistor Data
   ---------------------------------------------------------------------------
VOLTS AMB DATE     TIME  STATUS   30  40  50  60  70  80  90 100 110 120 130
     140 160 180 200 220 240 260 280 300 320 340 360 380 400 420 440 460 480
---------------------------------------------------------------------------
RAIL 1
13.5  061 05/25/11 15:25 VALID   242,251,258,263,264,265,267,268,268,270,271
     272,275,277,278,280,281,283,284,284,284,285,287,287,288,287,287,287,289
RAIL 2
13.5  061 05/25/11 15:25 VALID   262,268,274,282,282,282,282,283,284,285,285
     288,289,291,294,296,297,297,298,300,300,300,300,300,300,300,300,300,300
WHEEL 1
13.7  063 06/27/11 14:09 INVALID 112,116,117,117,116,116,114,114,112,112,111
     110,112,111,112,114,110,104,100, 96, 94, 85, 87, 76, 69, 63, 61, 63, 58
WHEEL 2
13.7  063 06/27/11 14:09 INVALID 135,  2,  2,  2,  2,  2,148,  2,  2,  2,  2
       2,  2,  2,  2,  2,  2,  2,  2,  2,  2,  2,  2,  2,  2,  2,  2,  2,  2
===========================================================================
```

Appendix L
2500-536 Red Filter Frame - New Design

The STC hot wheel scanner application utilizes the specialized red filter frame. The “old-style” red filter frames (manufactured prior to 2012) can be identified by their round openings. A design flaw in this version can result in the reporting of overinflated heat values.

The new revision of the red filter frame (manufactured in 2012 and after) has a slotted aperture. This new design has proven to provide much greater accuracy, thus reducing the possibility of errant temperature readings.

Replacement of any “old-style” red filter frames should be considered a high priority. Upgrade as soon as possible to reduce the possibility of generating a false hot wheel alarms which could result in unnecessary train stops and crew inspections.

Identification:

Old Red Filter Frame – DO NOT USE!

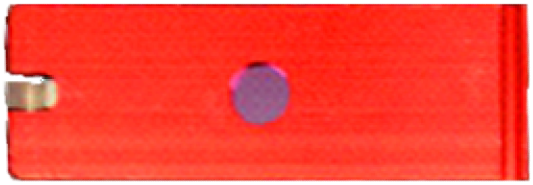

New Red Filter Frame

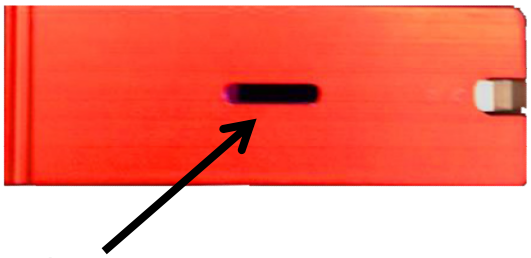

Slotted Aperture

Installation:

- Recalibrate the wheel scanner (see **Appendix G** for procedural instructions).
- Replace the old red filter frame with the new red filter frame.
- Return old red filter frames to STC for salvage.

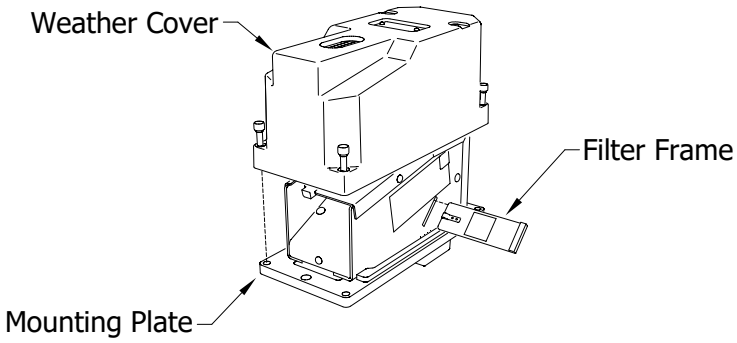

Appendix M Communications Ports

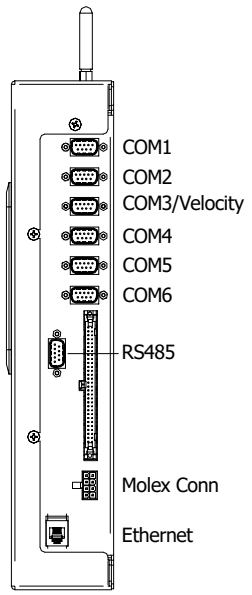

NOTE: The factory default setting for serial ports COM1-COM6 is 19,200 baud. The default setting for the RS485 port is 9,600 baud.

COM1 – To use the serial interface, connect a local computer (DTE) using a null-modem cable and set the communications software to use full-duplex.
This is the standard local access port.

COM2, COM4, & RS485 - Currently unused.

COM3 – Used to communicate with the Velocity Modem board's instruction set and database. COM3 is connected to Port 2 on the Velocity Modem board.

COM5 – At systems with AEI, attach a null-modem cable from the AEI (DTE) Interface Module to COM5 (DTE) of the Controller module.

COM6 – Used to load a software update package onto the NG².

ETHERNET – To establish an Ethernet connection, you need a network interface card (NIC) in your computer and a Category 5 (CAT5) 8-wire network cable for basic 10/100 functionality.

DCE (Data Circuit-Terminating Equipment) Modem				Connecting Cable	DTE (Data Terminal Equipment) Computer			Connecting Cable	DTE (Data Terminal Equipment) Computer		
Pins on the Modem		Name and Abbreviation		Inside the Straight-Through Connecting Cable	Abbr.	Pins on the Computer		*Inside the Null-Modem Connecting Cable	Abbr	Pins on the Computer	
Female DB25	DB9					Male DB25	DB9			Male DB25	DB9
1	-	Frame Ground (Chassis)	FG		FG	1	-		FG	1	-
2	3	Transmitted Data (TD)	TxD		TxD	2	3		TxD	2	3
3	2	Received Data (RD)	RxD		RxD	3	2		RxD	3	2
4	7	Request to Send	RTS		RTS	4	7		RTS	4	7
5	8	Clear to Send	CTS		CTS	5	8		CTS	5	8
6	6	Data Set Ready	DSR		DSR	6	6		DSR	6	6
7	5	Signal Ground	SG		SG	7	5		SG	7	5
8	1	Data Carrier Detect	DCD or CD		DCD or CD	8	1		DCD or CD	8	1
20	4	Data Terminal Ready	DTR		DTR	20	4		DTR	20	4
22	9	Ring Indicator	RI		RI	22	9		RI	22	9

Appendix N
Calibration of the PD8-Plus Presence Detector

1. Obtain track & time authority.
2. From the center of the gating transducers, measure the distance you want the track circuit to pick up the presence of a train.
3. The recommended distance is at least 50’ (15.24 m) and no more than 150’ (45.7 m).
4. At the point just measured, place a 0.06Ω shunt across both rails. The track must be shunted before the calibration switch is pressed.
5. Press and HOLD the Calibration Switch until the relay drive LED starts blinking. Release the switch, and the LED will stop blinking. The ZEPIC III will automatically begin the calibration process. NOTE: The track shunt MUST remain in place during the calibration process.

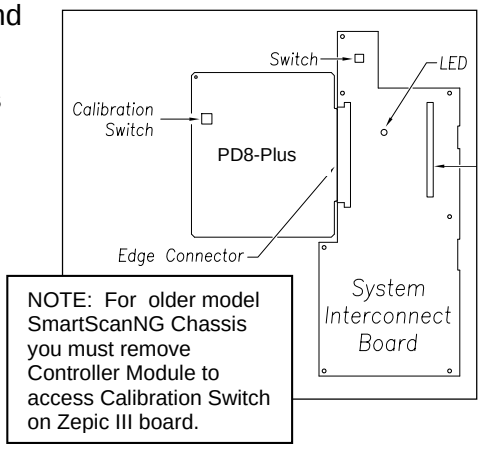

NOTE: the relay drive LED is the same as the SOTC LED visible on the lower right side of the NG² Chassis cover.

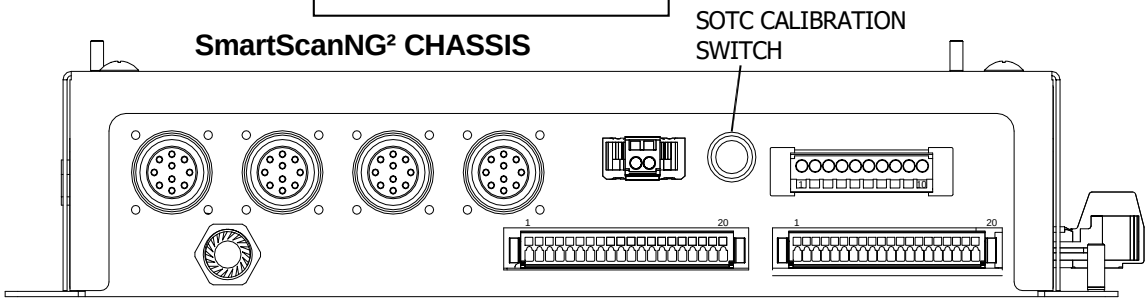

6. The relay drive will pick up (LED on) when the unit has successfully calibrated. This process can take up to 45 seconds to complete.

Verification

1. After calibration, lift the shunt, and the relay drive should drop (LED off). Replace the shunt, and the relay drive will pick up (LED on).
2. Move the shunt approximately 10’ farther out from the calibration point. The relay drive should not pick up (LED stays off). If this test fails, perform Short Track Calibration (detailed below).
3. The PD8-Plus is now operating properly and will activate at an equal distance on either side of the track feed point.

4. After trackside calibration procedures have been successfully completed, place a temporary shunt across the track wires inside the bungalow and verify that the signal system goes to stop. Once verified, remove the temporary shunt.

> **IMPORTANT:** To ensure an accurate activation point, always place the shunt BEFORE pressing the Calibration Switch.
>
> If the PD8-Plus cannot achieve calibration, it will blink the relay drive LED three (3) times in rapid succession, indicating a calibration error. The unit will continuously repeat the calibration procedure (there is no need to press the Calibration Switch), allowing you to troubleshoot the track circuit, wiring, and battery. Once the issue has been corrected, repeat the calibration procedure.
>
> Both the ZEPIC III and Zepic PD8-Plus have a two-wire track circuit and will activate an equal distance on both sides of the track feed point.

PD8-Plus Short-Track Circuit Calibration

1. The system may fail the 10 ft calibration verification step noted above if the installation is using 26KHz and the desired CAL point is ~30ft from the feed points (Short track circuit), and the bungalow is near the track (short track wires).
2. If this is the case, reconfigure the PD8-Plus to a lower frequency that is compatible with other equipment that may be on the track. In general, changing from 26KHz to 20KHz or 17.5KHz should solve the short-track circuit calibration issue.
3. Once the module has been reconfigured for the new operating frequency, repeat the normal calibration procedure detailed above.

PD8-Plus Troubleshooting and Application Notes

1. If the unit will not calibrate, watch the relay drive LED for approx 45 seconds. If it blinks, this means the PD8-Plus has turned its receiver gain to the maximum setting and cannot see the track shunt. Look for open circuits between the PD8-Plus and the shunt on the track. I.e., track wires, bond wires, etc.
2. The PD8-Plus will look equally in both directions. If one side of the circuit has insulated joints, the PD8-Plus will operate. However, the activation distance will not be the same. In general, track circuit equipment cannot see past insulated joints.
3. Audio overlay systems like the PD8-Plus will not work with wideband shunts in their track circuit range.
4. If the relay drive is stuck ON, look for short circuits between the PD8-Plus and the desired pick point.
5. The greater the distance between the PD8-Plus and track connections, the greater the effects ballast will have on the PD8-Plus performance.
6. Presence output is a dry contact configuration Form –C dry contact, 225mA max current. (N.O. contact with no train presence)
7. In good track ballast conditions, a PD8-Plus circuit can travel up to 500 ft in each direction. Rotating operating frequencies to avoid interference with other equipment is recommended.
8. The higher the operating frequency, the shorter the track circuit.

Appendix O
Track Circuit Frequency Configuration

The Zepic PD8-Plus module is capable of outputting the following track drive frequencies: 8.2K, 10K, 11.5K, 13.2K, 15K, 17.5K, 20K, 26KHz. These track frequencies can be configured in the field without the need for specialized tools. The figure below details the switch and TAP setting required to configure the unit for each frequency.

Note: Perform the calibration procedure after changing the track frequency.

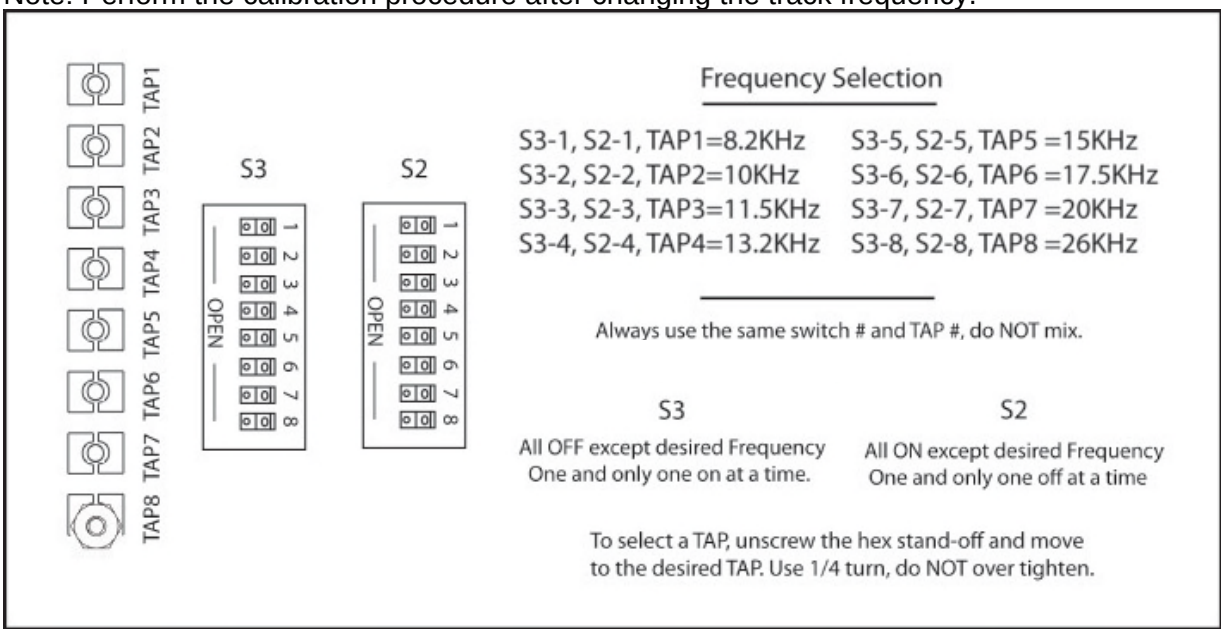

Example:

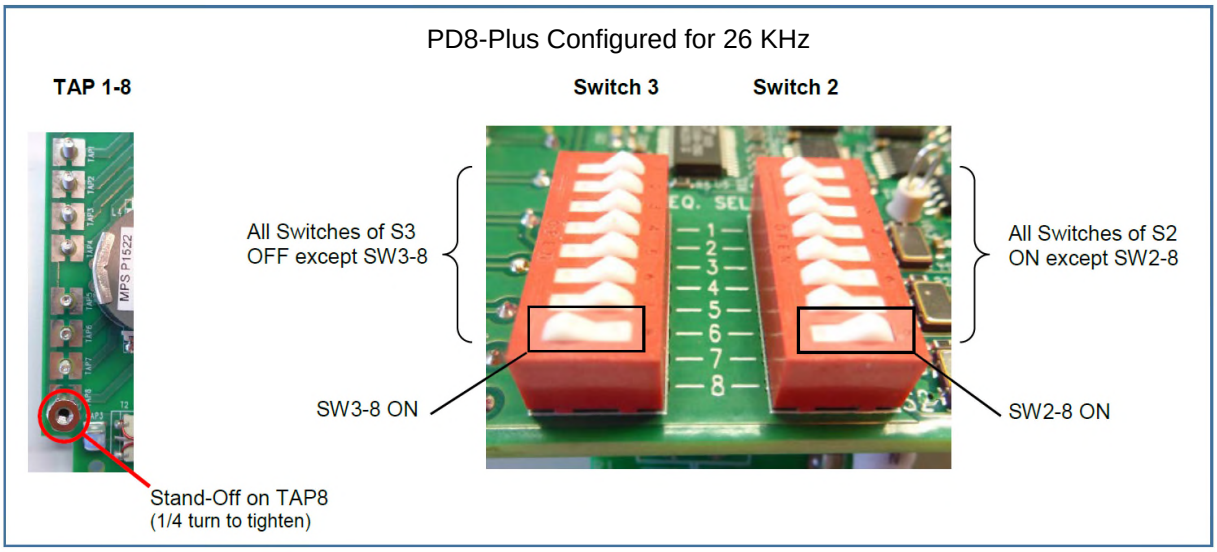

NOTE: Older model track circuit boards have a fixed drive frequency and are not configurable.

Appendix P
15A Breaker Upgrade in SmartScanNG Chassis (Pre-2012)

This appendix applies only to those SmartScanNG systems (manufactured prior to 2012) that are to be upgraded with a SmartScanNG² Controller Module.

Current model Type-3 scanners have higher wattage heaters than those previously used. The pre-2012 controller chassis was originally equipped with a 10A breaker which may trip while connected to four Type-3 scanners.

STC recommends returning any pre-2012 chassis for retrofit **if four Type-3 scanners** are to be used. This upgrade kit (2300-500E) includes a 14 AWG power cord, a 15A breaker, and associated wiring.

The pre-2012 controller chassis can be easily identified in the field by the AC power cord. All controller chassis manufactured before 2012 were equipped with a grey 18 AWG 3 conductor power cord with a flexible cordgrip. Post-2012 controller chassis have a black 14/3 power cord and a strain relief with dome nut.

Pre-2012 Controller Chassis

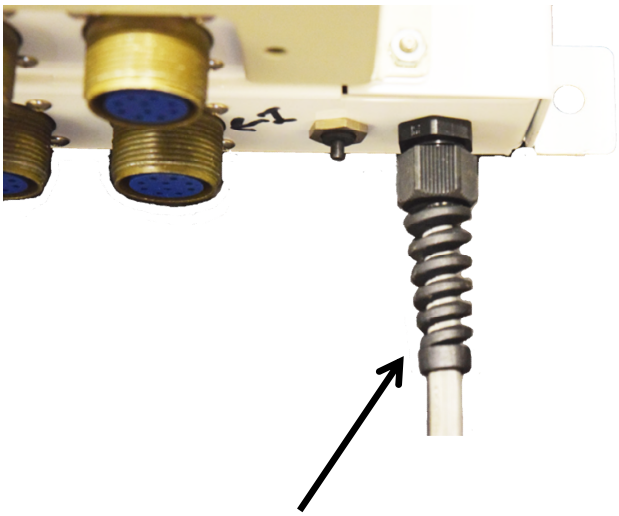

18/3 Power Cord
Flexible Cordgrip

Post-2012 Controller Chassis

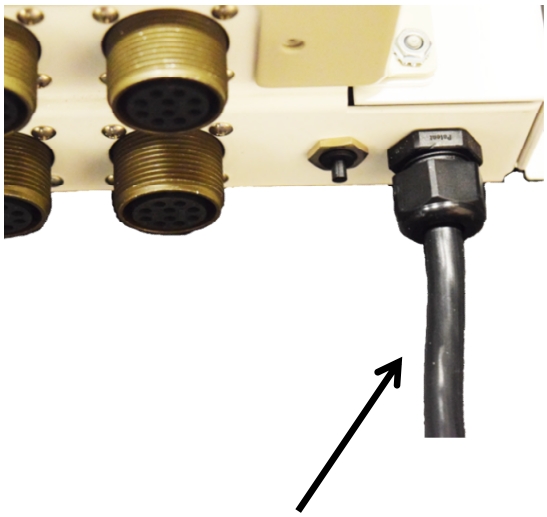

14/3 Power Cord
Strain Relief with Dome Nut

Appendix Q
Scanner Base Drain Hole

For scanners manufactured prior to 2013:

Where required due to water accumulation, a 0.25” drain hole can be drilled in the bottom of the scanner base.

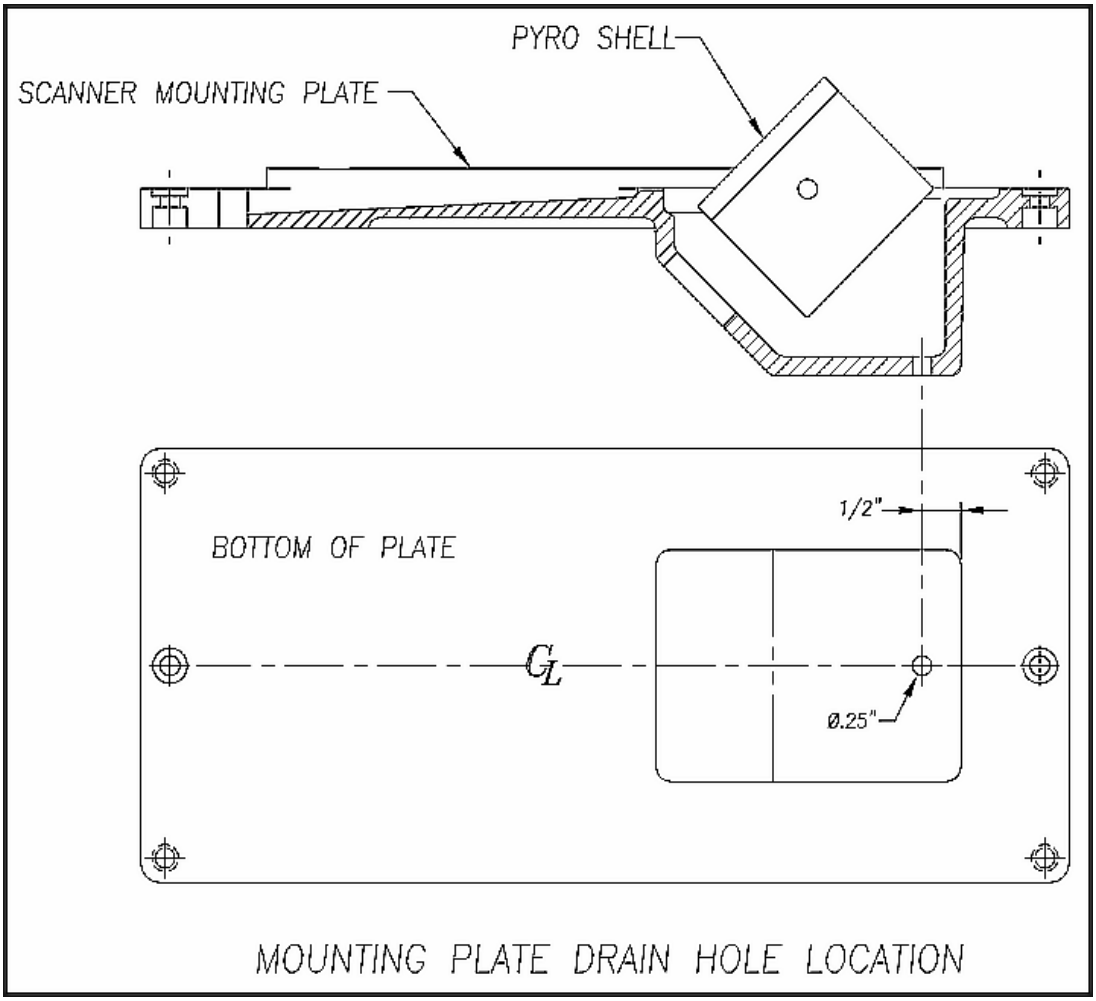

Index

This section lists the page numbers for keywords and phrases used in this guide.

1

19,200 baud · 263
1KHz test tone · 80

A

Absolute alarm · 15, 252
Absolute option · 15, 131, 139, 145, 208
AEI Diagnostic Detail report · 99, 121, 163, 168, 169
AEI option · 46, 61, 123, 127, 128, 138, 140, 141, 142, 150, 160, 163, 180
AEI Reader Parameters · 68, 69, 70, 160
AEI tags · 133, 140, 147
alarm
- Absolute · 15, 37, 252
- Carside Slope · 12, 15, 42, 43, 47, 48, 127, 128, 132, 139, 141, 142, 146, 150, 175, 176
- Cold Rail · 40, 131, 139, 207, 208, 213, 215
- Cold Resistor · 39, 41, 131, 145, 208, 209, 216
- Cold Wheel Scanner · 39, 132, 146, 209, 217
- Dead Battery · 213
- Dead Resistor · 213
- Dead Wheel Scanner Resistor · 176
- Differential · 15, 38
- Dragging Equipment · 19, 45, 180, 182, 183
- Exception · 61, 133, 134, 138, 147, 148, 177, 180
- High-Load · 19, 45, 179
- Highrange Transducer Miscounts · 58, 176, 210, 214
- Hotbox · 14, 131, 176, 180, 182, 183, 184, 185
- Hotwheel · 19, 39, 46, 123, 127, 131, 132, 138, 141, 145, 148, 181
- Integrity Failure · 210, 216
- Low Battery · 210
- Midrange Transducer Miscounts · 210
- No Approach Track · 192, 211
- Pyrometer Noise Filtered Rail · 211
- Pyrometer Noise Filtered Wheel · 211
- Pyrometer Saturation · 15, 252, 253
- Reverse Direction Detected · 211
- Short Train · 212
- Stuck Dragger During Train Passage · 214
- Stuck Dragger Pretrain · 214
- Stuck Dragger Recovered · 212
- Stuck High Load Detector Pretrain · 19, 214
- Stuck Wide Load Detector Pretrain · 20, 215
- Successive Cold Rails Exceeded · 208, 215
- Successive Cold Resistors Exceeded · 39, 41, 209, 216
- Successive Cold Wheel Resistors Exceeded · 39, 209, 217

Test Train · 212
Train Present on Restart · 217
Very Slow Train · 58, 176, 195, 210, 212, 214, 253
Wide-Load · 20, 44, 46, 179
Alarm Settings menu · 19, 36, 37, 38, 39, 40, 41, 42, 43, 131, 132, 139, 145, 146, 159, 207, 208, 209, 213, 215, 216
alignment · 187, 188
ambient temperature · 15, 17, 19, 37, 39, 40, 49, 50, 56, 58, 90, 126, 130, 132, 140, 144, 146, 159, 161, 165, 176, 208
ancillary messages · 56, 176, 177, 178, 179, 183
Announce Axles option · 12, 57
Announce Car Identification option · 61, 180, 183
Announce Customer Name option · 60, 174
Announce Left-Right Alarm Reference option · 60, 180, 183
Announce Number of Cars option · 12, 60
Announce Power Off option · 59
Announce Slow Train option · 12, 59
Announce Speed option · 12, 57
Announce Temperature option · 58
Announce Train Arrival option · 60, 174
Announce Train Length option · 12, 58
antenna · 133, 147
arrival message · 60, 174
attenuation plug · 225, 236, 238
autocalibration · 25, 50, 80, 90, 159, 161, 201, 222, 233, 235, 237, 238, 239, 241, 243, 246, 247
Auxiliary alarms · 19
Axle Alarm Summary · 133, 147
axle count · 12, 56, 57, 176, 195, 196, 199
axle number · 134, 148, 167
Axle Scanning · 14

B

ballast · 188
baseline resistor integrity · 90, 131, 133, 145, 147, 161
battery charger · 189, 190, 191, 204
battery temperature probe · 189
baud rate · 28, 240, 245
bearing scanners · 7, 11, 15, 16, 19, 130, 134, 144, 148, 195, 225, 229, 251
Broadcast Delay · 173

C

calibrated heat source · 25, 239, 240, 243, 244, 245, 247
Clear Event Log option · 84, 114, 170, 222
clearance mode · 49
clearance type · 48
COM1 · 28, 73, 121, 234, 237, 240, 245, 263
COM3 · 27
COM5 · 263
COP resets · 160
correction factor · 17, 131, 133, 145, 147

D

Date and Time · 32, 126, 130, 140, 144, 159, 165
default setup parameters · 71, 72

Delete All Stored Train Data option · 84, 222
Dragger option · 19, 45
DTMF · 65, 71

E

Equipment Settings menu · 15, 19, 20, 31, 39, 42, 43, 44, 45, 46, 47, 48, 49, 50, 51, 52, 53, 55, 61, 123, 124, 126, 127, 128, 132, 133, 134, 138, 139, 140, 141, 146, 147, 159, 160, 163, 167, 179, 180
error message · 65, 66
Event Log · 84, 85, 99, 114, 121, 170, 171, 222, 223, 224
Exception Detail report · 121, 138, 141, 142, 143, 149, 150, 152
Exception Summary report · 121, 138, 139, 141
Exceptions directory · 84, 138, 140, 144, 222
Excessive Alarms · 179, 182, 184

F

float voltage · 190, 191, 204, 210, 213
fuse block · 189, 190

G

Gate Distance option · 44, 51
gating transducers · 11, 12, 13, 14, 15, 17, 18, 51, 134, 148, 167, 192, 195, 196, 203, 211, 212, 253

H

heaters · 11, 49, 249

K

keypad · 22

L

Lens Cleaning · 249

M

Main menu · 240, 243, 246, 247
Maintenance email list · 88
milepost/kilometer post · 34
modem · 240, 245
mounting plate · 230, 231, 232, 245, 249, 250

N

Network Menu · 25

Network Settings · 74

O

OLED · 22
optics · 243, 247, 249

P

presence detector · 265
Processor board · 21
pyrometer · 25, 239, 241, 246

R

Radio Inhibit · 78
Radio Test · 24, 76
Remote System Reset · 83
Replay train · 96
reports
- Abbreviated Exception Detail · 150
- AEI Diagnostic Detail · 163
- Event Log · 170
- Exception Detail · 141
- Exception Summary · 138
- System Status · 157
- Train Detail · 127
- Train Summary · 123

S

scanner cover · 229, 230, 232, 243, 247, 250
Security Menu · 97
serial interface · 240, 243, 246, 247
Setup menu · 30
shutters · 235, 238, 242, 243, 246, 247
Start Manual Train · 79
System Functions menu · 24, 76
system health menu · 23
System Status report · 157
system warning · 21

T

Track Designation · 35, 75
Track Direction · 35
Train Detail report · 127
Train Summary report · 123

U

Update Menu · 85

V

View maintenance statistics · 87
Vocabulary Test · 77
Volume Menu · 26

W

wayside enclosure · 243, 247
Web security settings · 89, 91, 93
web user interface · 99
wheel scanners · 229
WiFi · 99

Z

Zepic III · 265